City of San Leandro
Civic Center, 835 E. 14th Street
San Leandro, California 94577

WPCP REHABILITATION PROJECT
PROJECT NO. 08-593-52-239

ADDENDUM NO. 1

March 7, 2011

TO: All Prospective Bidders

The additions and/or deletions contained in this Addendum shall be made a part of the plans and specifications and contract documents for the above described project, and shall be subject to all applicable requirements hereunder, as if originally shown and/or specified.

SPECIFICATIONS:

Item 1.01 **Section 00700, Paragraph 6.7.B** – Delete Item 1 and replace with the following:

"1.Equalization Facilities per Section 01140-1.10 – within 85 working days."

Item 1.02 **Section 01140** – Add the following Item 1.10:

"1.10 EQUALIZATION FACILITIES

A. Early completion is required for work on several new and rehabilitated existing facilities that are needed to allow gravity flow diversion from the existing primary clarifiers to equalized storage and the return of equalized flows to the existing headworks through the plant drain system.

B. Work on the following new or rehabilitated facilities shall be substantially complete within the time period required by Section 00700-6.7.B.1.
   1. Equalization Basin
      b. Reference the following drawings for work pertaining this facility: 01-D-02, 01-D-03, 01-D-05, 01-D-06, 01-C-02, 01-C-03, 01-C-05, 01-C-06, 01-C-08, 01-C-09, 01-C-11, 01-C-12, 01-C-20, 01-C-21, 01-C-30, 01-C-31, 01-C-32, 01-E-01, 01-E-02, 01-E-04, 01-C-05, 80-E-02, and 80-N-01.
   2. Equalization Tanks No.1, No. 2 and No. 3 and Equalization Return Pump Station.
      a. Reference the following drawings for work pertaining these facilities: 80-D-01 through 80-D-04, 80-S-01 through 80-S-03, 80-M-01 through 80-M-04, 00-E-25 through 00-E-27, 01-E-05, 80-E-01, 80-N-01, and 80-N-02.

Stephen H. Cassidy, Mayor

City Council: Pauline Russo Cutter, Ursula Reed, Michael J. Gregory, Diana M. Souza, Jim Prola, Joyce R. Starosciak

3. Equalization Diversion Box.
   a. Reference the following drawings for work pertaining this facility: 01-C-17, 80-E-02, and 80-N-01.
4. Junction Box No. 2.
   a. Reference the following drawing for work pertaining this facility: 01-C-19.
5. Interconnecting piping between equalization facilities.
   a. 30" PEF piping connecting the Equalization Diversion Box to the Equalization Basin. Reference Drawings 01-C-08, 01-C-09 and 01-C-27.
   b. 30" PEF piping connecting the existing Junction Box No. 2 to the Equalization Diversion Box.
   c. 30" PEF piping connecting existing Primary Clarifier No. 1 and Primary Clarifier No. 2 to existing Junction Box No. 2.
   d. 12" PEF piping connecting the Equalization Basin to Equalization Tank No. 2.
   e. 12" PEF piping connecting Equalization Tank No. 2 to Equalization Tank No. 3.
   f. 18" PEF piping at the Equalization Return Pump Station.
   g. 3W piping connecting existing 8" 3W line to 3W piping at Equalization Basin and Equalization Tanks.
   h. Reference the following drawings for work pertaining these pipelines: 01-C-08 through 01-C-13 and 01-C-27 through 01-C-29."

Item 1.03 **<u>Section 01140-3.04.D.5</u>** – Revise item 5. as follows:

"5. Digester No. 1 Rehabilitation
   a. Suggested Work Sequence:
      1) Confirm facility is dry and available for rehabilitation.
      2) Perform work shown on the Drawings.
      3) Place facility in service.
   b. Process Connection and Shutdown Constraints:
      1) Digester No. 2 shall remain dry and available to be placed in service during this work.
      2) Digester No. 4 shall remain in service during this work."

Item 1.04 **<u>Section 01140-3.04.D.6</u>** – Revise item 6. as follows:

"6. Digester No. 2 Rehabilitation
   a. Suggested Work Sequence:
      1) Route temporary Hot Water Supply (HWS) and Hot Water Return (HWR) piping around digester as shown on the Drawings.
      2) Coordinate temporary shutdown of Cogeneration System with OWNER and tie-in temporary HWS and HWR piping.
      3) Confirm facility is dry and available for rehabilitation.
      4) Remove existing piping and conduits routed over digester cover to allow removal of digester cover.
      5) Perform work shown on the Drawings.

6) Coordinate temporary shutdown of Cogeneration System with OWNER to reconnect HWR and HWS piping.
7) Remove temporary piping.
8) Place facility in service.

b. Process Connection and Shutdown Constraints:
1) Digester No.1 and No. 4 shall remain in service during this work.
2) Digester No. 2 shall remain out of service for no more than 3 months."

Item 1.05 **Section 01140-3.04.D** – Add the following Item 9:

"9. Digester No. 4 Rehabilitation
a. Suggested Work Sequence:
1) Confirm Digesters No. 1 and No. 2 rehabilitation work is completed per section 01140-3.04.D.5 and 01140-3.04.D.6 and are in service.
2) Take facility out of service.
3) Perform work shown on the Drawings.
4) Place facility in service by rerouting flow from Digester No. 2 to Digester No. 4.

b. Process Connection and Shutdown Constraints:
1) Digester No. 1 and No. 2 shall remain in service during this work.
2) Digester No. 4 may be out of service for no more than 30 consecutive days."
3) Clean Digester No. 2 with high pressure washer upon completion of work at Digester No. 4.

Item 1.06 **Section 01450-1.05.C Testing** – Delete this paragraph and replace with following paragraph as follows:

"C. Testing:

1. OWNER will employ and pay for services of independent testing laboratory to perform routine tests of materials to confirm compliance with requirements of Contract Documents per section 00700-4.1.3.
   a. Retesting of any specified tests, due to no fault of the OWNER, shall be paid for by the CONTRACTOR.
2. When protesting failed tests of material in place or to be used, take additional specimens and have specimens tested:
   a. When original test proves to have been in error, file claim for reimbursement of direct costs for sampling and testing."

Item 1.07 **Section 01500-1.10.A.3** – Delete this paragraph in its entirety.

Item 1.08 **Section 01500-1.10.B.2** – Add item j. as follows:

"j. Monitored burglar alarm system"

Item 1.09 **Section 01524, Appendix B** – Delete Appendix B and replace with revised Appendix B included herewith.

Item 1.10 **Section 01734-1.05.A** – Add the following sentence at the end of the paragraph:

"Incorporate lane closure requirements for Davis Street in Chart No.1 and Chart No. 2 on the Lane Closure Requirements form (Attachment A)."

Item 1.11 **Section 01734** – After the words "END OF SECTION", add the headings "ATTACHMENT A" and "LANE CLOSURE REQUIREMENTS". Append the attached "Lane Closure Requirements" form to the end of the specification.

Item 1.12 **Section 02810-2.02 "CONTROLLER"** – Revise paragraph A to read, "As shown on Drawings and as described herein: Controller and weather sensor to be by same manufacturer and by Hunter, Toro, or approved equal. Controller, solar power assembly and cabinets to be pre-assembled, pre-wired units supplied by John Deere Landscapes, Green Tech division (925-609-2180), Imperial Technical Services (209-404-1746), or approved equal. Coordinate exact model designations for assemblies based on controller models shown on the Drawings, and integration with solar power assemblies. When ordering solar power assemblies, confirm number of required solar panels and batteries required for each unit."

Revise paragraph B to read, "Weather sensor: As shown on Drawings. Controllers 'B' and 'C' share a single weather sensor. Controller 'A' has its own weather sensor."

Item 1.13 **Section 02810-2.03 "REMOTE CONTROL VALVES"** -- Delete paragraph B in its entirety.

Item 1.14 **Section 02810-2.10 "WIRE"** – Add the following paragraph:

"C. Additional wire and cable types required for connecting and grounding solar power units."

Item 1.15 **Section 02810-3.06 "CONTROLLER"** – Revise the following paragraphs:

Revise paragraph A to read, "Install controller and solar power assemblies per manufacturer's instructions and local code. Observe manufacturer's recommended distances for spacing and layout of all components."

Revise paragraph B to read, "Install valve control wire in conduit from controller to each remote control valve, per San Leandro standard."

Add paragraph F to read, "Install solar sync weather sensor on poles of solar panel assembly, minimum 8 feet above grade."

Item 1.16 **Section 02810-3.16 "ADJUSTING"** – Revise paragraph A to read, "Prior to Final Acceptance, adjust and regulate entire system. Set watering schedule on controller as recommended by manufacturer for use with weather sensor. Adjust remote control valve flow control to operate heads at optimum pressure.

Item 1.17 **Section 03304-1.03.A.1** – Delete Item a. and replace with the following Item a.:

"a. Dry in-place density shall meet the following requirements:
1) Fill for existing headworks and influent pump station: Minimum 43 pounds per cubic foot; maximum 48 pounds per cubic foot.
2) Fill at fixed film reactor and all other locations: Not to exceed 30 pounds per cubic foot."

Item 1.18 **Section 05500-2.02.K.3** – Delete Item a. and replace with the following:

"a. Provide miscellaneous stainless steel items not specified in this Section as indicated on the Drawings or specified elsewhere.
1) Fabricate and install in accordance with the best practices of the trade.
b. Cleaning and passivation.
1) Following shop fabrication of stainless steel members, clean and passivate fabrications.
2) Finish requirements: Remove free iron, heat tint oxides, weld scale and other impurities, and obtain a passive finished surface.
3) Provide quality control testing to verify effectiveness of cleaning agents and procedures and to confirm that finished surfaces are clean and passivated.
a) Conduct sample runs using test specimens with proposed cleaning agents and procedures as required to avoid adverse effects on surface finishes and base materials.
4) Pre-clean, chemically descale (pickle), and final clean fabrications in accordance with the requirements of ASTM A 380 to remove deposited contaminants before shipping.
a) Passivation by citric acid treatment is not allowed.
(1) If degreasing is required before cleaning to remove scale or iron oxide, cleaning (pickling) treatments with citric acid are permissible; however, these treatments shall be followed by inorganic cleaners such as nitric-hydrofluoric acid.
b) Provide acid descaling (pickling) in accordance with Table A1.1 of Annex A1 of ASTM A 380.
c) After pickling, final cleaning of stainless steel shall conform to Part II of Table A2.1 of Annex A2 of ASTM A 380.
5) After cleaning, inspect using methods specified for "gross inspection" in ASTM A 380.
6) Improperly or poorly cleaned and passivated materials shall not be shipped and will not be accepted at the job site."

Item 1.19 **Section 06611-1.01.A.3** – Add the following Item 3:

"3. Walkway Grating at Digester No. 4"

Item 1.21 **Section 06611-2.02**– Add the following Item 2.02:

"2.02 WALKWAY GRATING AT DIGESTER NO. 4

A. Manufacturers: One of the following or equal:
   1. AFC, Inc., Division of Strongwell, Chatfield, MN, Duradek.
   2. Chemical Proof Corporation, Arlington, WA, Chemgrate.

B. Materials:
   1. Core: Unidirectionally aligned glass fibers.
   2. Mat: Submit standard corrosion liner.
   3. Veil: Submit standard corrosion liner.
   4. Ultraviolet stabilizer: Added to the exterior surfaces in the type and amount recommended by the resin manufacturer.
   5. Resin: Fire retardant premium vinyl ester, antimony trioxide or pentoxide added to meet Class I flame spread rating of ASTM E 84 and self-extinguishing requirements of ASTM D 635.
   6. Color: Grey or as indicated on the Drawings.
   7. Anti-slip coating: Permanently bonded grit of selected color.

C. Design criteria and chemical exposure:
   1. Deflection and concentrated load: Maximum 0.15 inches at span indicated on the Drawings under concentrated load of 250 pounds.
   2. Deflection and uniform distributed load: Capable of carrying uniform distributed load of 100 pounds per square foot on simple span as indicated on the Drawings without deflecting more than 0.25 inches.
   3. Weight: Maximum 3 pounds per square foot for 1 inch high grating with open area of minimum 50 percent.
   4. Suitability: Use stairs and grating suitable for use in environments containing chlorine and sulfuric acid solutions at the temperatures and concentrations specified for the application.

D. Components:
   1. Bearing bars: I-bars, depth as indicated on the Drawings, I-bars spaced at maximum 1-1/2 inches on center.
   2. Cross bars: 3/8-inch diameter spaced at maximum 12 inches on center.
   3. Hold downs, connectors, and accessories: As recommended by grating manufacturer; Type 316 stainless steel.

E. Fabrication:
   1. Produce grating bearing and cross bars by pultrusion process. Do not use hand lay-up construction methods.

2. Coat ends of grating with resin.
3. Fabricate single sections for each span. Do not clamp 2 or more grating sections together within spans.
4. Type 316 stainless steel plates and angles at openings:
   b. Install 5/8-inch thick plate or angle where required to fill openings at changes in elevation and at openings between equipment and grating.
   c. Install angle stops at ends of grating to prevent grating from sliding.
5. Maximum 1/8-inch clearance allowed between ends of grating and inside face of vertical leg of support angles.

F. Cutouts:
1. Provide where required for equipment access or penetrations, including valve operators, stems, and gate frames.
2. Seal cut edges with resin."

Item 1.22 **Section 06615-2.01.A.1 "Manufacturer"** – Revise to read, "1. Richlite Company, Tacoma, WA, PaperStone Solid Surface Panels, or equal. "

Item 1.23 **Section 08310-2.01 "Products"** – Add item "E." as follows:

E. Floor Access Doors: Single-leaf aluminum access doors, 2'-0" wide x 2'-0" long, designed to withstand a live load of 150 pounds per square foot.

1. Manufacturer: Bilco Type "T", Milcor "T Series", or equal.
2. Features:

a. Frame: 1/4-inch thick extruded aluminum with built-in neoprene cushion and with strap anchors bolted to exterior.

b. Door: 1/4-inch thick aluminum smooth plate reinforced with aluminum stiffeners. 1/8" height extruded aluminum molding fastened to the perimeter to accept floor-covering material.

c. Hinges: Cast steel hinges bolted to underside and pivoted on torsion bars that counterbalance the door for easy operation. Door shall open to 90 degrees and lock automatically in that position. Provide a vinyl grip handle to release the door for closing.

d. Lock: Snap lock and removable top handle.

e. Finish: Mill finish with bituminous coating on exterior of frame in contact with concrete; field painted under Section 09910.

Item 1.24 **Section 09250-3.03.H.1 "Tile Backerboard"** – Revise first sentence to read, "Fasten to metal studs or existing tile and concrete block with corrosion resistant fasteners, spaced at maximum 8 inches on center."

Item 1.25 **Section 09300-2.01.A.2 "Ceramic Tile - Walls"** –Replace the entire sentence with the following, "2. Walls: 2 x 2 inch ceramic tiles, glazed or matte finish. a. Colors: One (1) field color and two (2) accent colors to be selected by ENGINEER."

Item 1.26 **Section 09675-2.01.A "Manufacturers"** – Revise to read, "Provide chemical resistant epoxy resin floor and cove base system manufactured by Crossfield Products Corp. "Dex-O-Tex Cheminert K" over "Dex-O-Tex SC Membrane", Tera-Lite, Inc, "Tera Gem III DQ System", or equal."

Item 1.27 **Section 09960-3.16.D.3.p** – Add the following Item p:

"p. Digesters No. 1, No. 2, and No. 4 covers and accessories: All metal surfaces exposed to sunlight."

Item 1.28 **Section 09960-3.16.D.4.h** – Add the following Item h:

"h. Digesters No. 1, No. 2, and No. 4 covers and accessories: All metal surfaces except where high solids epoxy and polyurethane system is specified or indicated on the Drawings."

Item 1.29 **Section 10240 –2.03.C "Vertical Louver Screens"** – Delete this paragraph.

Item 1.30 **Section 10520-2.03** – Add the following section:
"2.03 Fire Department Key Box

A. Manufacturers: The Knox Company "#3200 , GE Interlogix "Supra Products, or equal.
B. Features: Type : Recessed-mounted, 4 x 5 inches x 3-1/2 inches deep. Key as directed by the Alameda County Fire department.
C. Finish: Aluminum, anodized."

Item 1.31 **Section 12349 - "Laboratory Service Fittings"** – Revise paragraph 1.01.A.1 to read, "1. Water, gas, vacuum and air faucets and valves for use at laboratory casework."

Revise paragraph 2.01.A.2, delete "Hamilton Manufacturing Co." and replace with, "2. Water Saver Co.".

Revise paragraph 2.05.A, replace "Gas and Air Services:" with, "A. Gas, Vacuum and Air Services: "

Add the following item to paragraph 2.05.C - "3. Yellow: for vacuum."

Item 1.32 **Section 17101-3.05.A.3** – Replace Items e., f., and g. with the following:

"e. The FFR lift pumps can be operated in wet weather mode or daily diurnal mode.
f. In wet weather mode, when primary effluent flows entering the FFR lift station exceed the capacity of the secondary treatment system (estimated to be approximately 14 mgd), the excess flow is diverted to the flow equalization storage facilities.

1) A minimum setpoint flow rate corresponding to the minimum wetting rate on the FFR media and a maximum setpoint flow rate corresponding to the estimated secondary treatment system capacity are selected by operations staff.
2) When primary effluent flows entering the pump station are between the selected minimum and maximum flow rates, the pumps operate in setpoint level control mode and the flow pumped to the FFR equals the flow entering the lift station.
3) When primary effluent flows entering the pump station are below the selected minimum flow rate, the pumps operate to maintain the setpoint minimum flow rate. This mode of operation requires the simultaneous operation the FFR recirculation control valve. The recirculation control valve returns a portion of the FFR effluent to the FFR lift station wet well so the setpoint minimum flow rate can be maintained.
4) When primary effluent flows entering the pump station exceed the selected maximum flow rate, the pumps operate to maintain the setpoint maximum flow rate so that the capacity of the secondary treatment system is not exceeded. In this mode, the water level in the lift station is allowed to rise and overflow the weir wall into the equalization pump station and flows are diverted to storage.

g. In daily diurnal mode, primary effluent flows entering the FFR lift station that exceed the estimated average daily influent flow to the plant are diverted to the flow equalization storage facilities.
1) The FFR lift station pumps operate to maintain a selected flow setpoint flow rate. The setpoint flow rate can be automatically calculated by the PLC or manually entered by operations staff. The calculated value is equal to the 24 hour running average of influent flows to the plant.
2) When primary effluent flows entering the pump station are less than the selected flow rate, the recirculation control valve returns a portion of the FFR effluent to the FFR lift station wet well so the setpoint flow rate can be maintained.
3) When primary effluent flows entering the pump station exceed the setpoint flow rate, the water level in the lift station rises, overflows the weir wall into the equalization pump station, and flows are diverted to the flow equalization storage facilities."

Item 1.33 **<u>Section 17101-3.05.A.6.a.3</u>** – Replace Items b), c), and d) with the following:

"b) In REMOTE mode, the FFR lift station shall either operate in WET WEATHER MODE or DAILY DIURNAL MODE as selected by the operator. The default mode of operation is WET WEATHER MODE.
c) WET WEATHER MODE:
(1) Provide the following operator adjustable setpoints applicable to the wet weather mode of operation:

(a) Minimum flow setpoint (3.5 mgd to 10 mgd; default; 6.9 mgd).
(b) Maximum flow setpoint (10 mgd to 15 mgd; default; 14 mgd).
(c) Wet well level setpoint (El. 5.00 to 8.00 ft; default: El. 7.00 feet).
(d) Lead pump start level (El. 5.00 to 8.00 ft; default: El. 7.00 feet).
(e) Lag pumps start level (El. 5.50 to 8.50 ft; default: El. 7.50 feet).
(f) Lag pumps shut down level (El. 1.50 to 4.50 ft; default: El. 3.50 feet).
(g) Lead pump shut down level (El. 1.00 to 4.00 ft; default: El. 3.00 feet).
(h) Discontinue minimum flow level (El. 5.50 to 8.50 ft; default: El. 7.50 feet).
(i) Discontinue maximum flow level (El. 5.00 to 8.00 ft; default: El. 6.00 feet).

(2) Default operation of the pumps is in level control mode.
(a) The PLC maintains the operator selectable WET WELL LEVEL SETPOINT in the wet well.

(3) When the FFR lift station discharge flow drops below the the MINIMUM FLOW SETPOINT, pump operation shifts to flow control mode,
(a) The PLC maintains the MINIMUM FLOW SETPOINT.
(b) The pumps continue to operate in this mode until the DISCONTINUE MINIMUM FLOW LEVEL is reached.

(4) When the FFR lift station discharge flow rate exceeds the MAXIMUM FLOW SETPOINT, pump operation shifts to flow control mode,
(a) The PLC maintains the MAXIMUM FLOW SETPOINT.
(b) The pumps continue to operate in this mode until the DISCONTINUE MAXIMUM FLOW LEVEL is reached.

(5) The FFR Recirculation Valve is interlocked to operate in conjunction with the FFR lift pump station as described elsewhere in this Section.

d) DAILY DIURNAL MODE:

(1) In DAILY DIURNAL MODE, the pumps operate in flow control mode where the PLC controls the pumps to maintain a constant setpoint flow rate approximately equal to the average daily flow rate entering the plant. The flow setpoint is selected by operations personnel from the CALCULATED DAILY DIURNAL FLOW SETPOINT or the MANUAL DAILY DIURNAL FLOW SETPOINT.
(a) The CALCULATED DAILY DIURNAL FLOW SETPOINT is calculated as Qffrdd = Qinf24 * SFdd; where Qinf24 equals the 24 hour running average of the influent flow measured at

the influent pump station and SFdd (1.00 to 1.50; default 1.10) is a safety factor.

(b) The MANUAL DAILY DIURNAL FLOW SETPOINT is manually entered by an operator (3.5 mgd to 10 mgd; default; default 7.0 mgd).

(2) The FFR Recirculation Valve is interlocked to operate in conjunction with the FFR lift pump station as described elsewhere in this Section.

(3) Switch pump operational mode from DAILY DIURNAL MODE to WET WEATHER MODE when a HIGH WET WELL LEVEL is measured."

Item 1.34 **Section 17101-3.06.C.3** – Delete Items a. through f. and replace with the following Items a. through d.

"a. The FFR Recirculation Valve is located in the recirculation control structure.

b. The FFR Recirculation Valve operates in either wet weather mode or daily diurnal mode. The operating mode matches the selection made for operation of the FFR lift station.

c. Wet weather mode:

1) When the FFR lift station is operating in flow control mode at the minimum flow setpoint, the recirculation valve modulates to maintain a constant level in the wet well and allow a portion of the FFR effluent to return by gravity to the FFR lift station. This operation enables an operator selected minimum hydraulic wetting rate to be applied to the FFR at all times.

2) When the FFR lift station pumps are operating in level control mode, the FFR Recirculation Valve remains closed.

3) When the FFR lift station is operating in flow control mode at the maximum flow setpoint, the FFR Recirculation Valve remains closed.

d. Daily diurnal mode:

1) In daily diurnal mode, the FFR Recirculation Valve operation allows a constant flow rate to be applied to the aeration basins.

2) In daily diurnal mode, the recirculation control valve will modulate to maintain a constant level in the FFR lift station wet well so the setpoint flow rate can be maintained. When flows entering the FFR lift station are less than the selected daily diurnal flow rate setpoint, the valve will open and return flow to the wet well. When flows entering the pump station exceed the selected daily diurnal flow rate setpoint, the water level in the lift station rises, the FFR Recirculation Valve closes, and primary effluent eventually overflows the weir wall into the equalization pump station.

3) A flow control override mode is provided to address conditions where the selected flow rate pumped to the FFR exceeds the maximum flow rate desired at the aeration basins. For example, this condition may occur when the desired minimum FFR wetting rate exceeds the average daily flow

entering the plant. In this mode, the FFR Recirculation Valve modulates to maintain a minimum recirculation flow rate equal to the FFR lift station flow set point minus the desired flow rate to the aeration basins, thereby limiting the flow rate to the aeration basins."

Item 1.35 **Section 17101-3.06.C.6.a.3** – Delete Items a) through d) and replace with the following Items a) through c).

"a) The PLC will modulate the FFR Recirculation Valve to control the flow rate returned to the FFR lift station. The control mode will be a function of whether the FFR lift station pumps are operating in WET WEATHER MODE or DAILY DIURNAL MODE.

b) Wet Weather Mode:
   (1) When the FFR lift station pumps are operating to maintain the MINIMUM FLOW SETPOINT, modulate the recirculation valve to maintain an operator-adjustable level setpoint at the FFR lift station wet well (El. 6.00 to 8.00; default: El. 6.50 feet).
   (2) When the FFR lift station pumps are in level control mode, close the FFR Recirculation Valve completely.
   (3) When the FFR lift station pumps are operating in flow control mode at the MAXIMUM FLOW SETPOINT, close the FFR Recirculation Valve completely.

c) Daily Diurnal Mode:
   (1) Modulate the FFR Recirculation Valve to maintain an operator-adjustable level setpoint at the FFR lift station wet well (El. 6.00 to 8.00; default: El. 6.50 feet).
   (2) Provide a flow override mode that modulates the FFR Recirculation Valve to maintain a minimum recirculation flow rate as measured by the magnetic flow meter located in-line with the valve.
   (3) The minimum recirculation flow setpoint is calculated as Qminrecirc = Qffrdd - Qffrddcalc where:
      (a) Qffrdd is the selected flow setpoint in daily diurnal mode at the FFR Lift Pump Station.
      (b) Qffrddcalc equals the CALCULATED DAILY DIURNAL FLOW SETPOINT as defined in the control strategy for the FFR lift pumps."

Item 1.36 **Section 17101-3.09.E.6.a.3.b** – At the end of the paragraph, add the following sentence.

"Unless MANUAL FLOW SETPOINT MODE is selected by operations personnel, the flow setpoint mode shall match the operational mode, WET WEATHER MODE or DAILY DIURNAL MODE, selected for the FFR lift pumps."

DRAWINGS:

Item 1.37 **Drawing 00-G-02 –** Add the following two drawings to the drawing index under the "STRUCTURAL" heading:

"221.01	65-S-04	1414.01	DIGESTER NO. 4 – PLAN AND DETAILS"
"221.02	65-S-05	1414.02	DIGESTER NO. 4 – SECTIONS"

Item 1.38 **Drawing 00-G-10, Deferred Submittals** -- Delete the following paragraph:

"The following list of deferred submittal items requires review and acceptance by the Engineer prior to installation. These items also require a separate building permit from the City of San Leandro Building Department and will be inspected by the City during installation. Contractor shall file additional permits and pay all associated fees. Contractor shall submit nexessary drawings, details, and calculations to the building department after receiving Engineers approval."

AND Replace with the following paragraph:

"The following list of deferred submittal items requires review and acceptance by the Engineer prior to installation. These items also require a separate building permit from the City of San Leandro Building Department and will be inspected by the City during installation. Contractor shall file additional permits in accordance with section 00700-7.5. Contractor shall submit necessary drawings, details, and calculations to the building department after receiving Engineers approval."

Item 1.39 **Drawing 00-G-04, Abbreviations** -- Add the following :
OFOI Owner Furnished Owner Installed
NIC Not In Contract

Item 1.40 **Drawing 13-D-01 –** Replace this drawing in its entirety with the attached revised drawing 13-D-01.

Item 1.41 **Drawing 13-D-02 –** Replace this drawing in its entirety with the attached revised drawing 13-D-02.

Item 1.42 **Drawing 13-D-03 –** Under "GENERAL NOTES" add note 2 as follows:

"2. PROVIDE TEMPORARY ODOR FANS AND ODOR TREATMENT SYSTEM PER SECTION 01140 TO ALLOW CONSTRUCTION OF NEW FACILITIES. CONNECT TO EXIST WITHDRAWAL DUCTING."

Item 1.43 **Drawing 13-D-04 –** Replace this drawing in its entirety with the attached revised drawing 13-D-04.

Item 1.44 **Drawing 13-D-05 –** Replace this drawing in its entirety with the attached revised drawing 13-D-04.

Item 1.45 **Drawing 01-C-07 –** Next to the callout for the new 4'-0" sidewalk between the existing sidewalk at Davis Street and the entry gate, add key note "10" with an arrow pointing to the new sidewalk.

Item 1.46 **Drawing 01-C-07, Key Notes –** Under "KEY NOTES" add note 10 as follows:

"(10) CONSTRUCT SIDEWALK FLUSH WITH PAVEMENT."

Item 1.47 **Drawing 01-C-07, Key Notes –** Replace note 3and 7 as follows:

"(3) PROTECT SIGN DURING CONSTRUCTION. RELOCATE SIGN AND CONCRETE SUPPORT BASE TO PROVIDE 3'-0" CLEAR BETWEEN SIGN AND NEW SIDEWALK."

"(7) PROTECT EXIST ENTRANCE GATE, GATE TRACK , AND CONCRETE TRACK FOUNDATION. REPLACE EXIST TRAFFIC DETECTION LOOPS AT ENTRY AND EXIT IN KIND. OWNER WILL SUPPLY RECORD INFORMATION ON GATE SYSTEM TO CONTRACTOR DURING CONSTRUCTION."

Item 1.48 **Drawing 01-C-07A –** Revise spot elevation callout below coordinate control point No. 34 from "3.45 FLL" to "3.55 FLL".

Item 1.49 **Drawing 01-C-07A –** Next to the callout for the new 4'-0" sidewalk between the existing sidewalk at Davis Street and the entry gate, add key note "17" with an arrow pointing to the new sidewalk.

Item 1.50 **Drawing 01-C-07A, Key Notes –** Under "KEY NOTES" add note 17 as follows:

"(17) CONSTRUCT SIDEWALK FLUSH WITH PAVEMENT."

Item 1.51 **Drawing 01-C-07A, Key Notes –** Under "KEY NOTES" replace notes 2, 3 and 10 as follows:

"(2) STRIPE 4' WIDE ACCESS WALKWAY. CONSTRUCT PAVING AT WALKWAY SO THAT MAXIMUM SLOPE IS LESS THAN 1:20 AND MAXIMUM CROSS SLOPE IS LESS THAN 2%."

"(3) PROTECT SIGN DURING CONSTRUCTION. RELOCATE SIGN AND CONCRETE SUPPORT BASE TO PROVIDE 3'-0" CLEAR BETWEEN SIGN AND NEW SIDEWALK."

"(10) PROTECT EXIST ENTRANCE GATE, GATE TRACK AND CONCRETE TRACK FOUNDATION. REPLACE EXIST TRAFFIC DETECTION LOOPS AT ENTRY AND EXIT IN KIND. OWNER WILL SUPPLY RECORD INFORMATION ON GATE SYSTEM TO CONTRACTOR DURING CONSTRUCTION."

Item 1.52 **Drawing 01-C-10 –** Extend a line east from Manhole 13 to the existing headworks influent channels and label the line "**4" PD**".

Item 1.53 **Drawing 01-C-11 –** Under "CONTINUATION COORDINATE CONTROL DATA (FROM DWG 01-C-10", for coordinate control point No. 48, revise invert elevations from "-1.75 NE, -1.75 SE" to "-6.91 NE, -6.91 SE".

Item 1.54 **Drawing 01-C-35, Section R –** Next to the cigar callout "**66" SD**" add key notes "4" and "5". Next to the cigar callout "**48" SD**" add the key note callout "5".

Item 1.55 **Drawing 01-C-35, Key Notes –** Under "KEY NOTES" add notes 4 and 5 as follows:

"(4) EXIST 66" SD PIPELINE IS BEDDED AND BACKFILLED IN PEA GRAVEL. PROVIDE ADDITIONAL EXCAVATION SHORING AND SUPPORT NECESSARY TO CONSTRAIN FLOWING MATERIAL AND PROTECT EXISTING PIPING. REPLACE DISTURBED BEDDING MATERIAL WITH CLSM. REPLACE DISTURBED BACKFILL WITH ABC PER SPECIFICATIONS."

"(5) EXIST 66" SD AND 48" SD PIPELINES DRAIN DIRECTLY TO BAY AND WATER LEVELS WITHIN THE PIPES FLUCTUATE WITH TIDES. ANTICIPATE THAT PIPES CAN FILL TO CROWN AND EMPTY COMPLETELY DUE TO TIDAL INFLUENCES. DESIGN ADJACENT SHORING AND DEWATERING SYSTEMS FOR THESE CONDITIONS."

Item 1.56 **Delete Drawing 01-L-09 and replace with revised sheet included herewith.**

Item 1.57 **Delete Drawing 01-L-10 and replace with revised sheet included herewith.**

Item 1.58 **Delete Drawing 01-L-13 and replace with revised sheet included herewith.**

Item 1.59 **Delete Drawing 01-L-15 and replace with revised sheet included herewith.**

Item 1.60 **Drawing 20-S-02 -** Add to the end of Note 7 "REFER TO SCHEDULE ON DWG. 20-S-01 FOR QUANTITY."

Item 1.61 **Drawing 65-S-01 -** Replace Note 3 with the following:

"COAT INTERIOR OF DIGESTER STEEL COVER, AND INSIDE AND OUTSIDE OF COVER SKIRT WITH HIGH SOLIDS EPOXY SYSTEM PER SECTION 09960. COAT EXTERIOR OF DIGESTER STEEL COVER, COVER ANCHORAGE, METAL DIGESTER APPURTENANCES AND ACCESSORIES ON ROOF, AND ROOF MOUNTED PIPING AND SUPPORTS WITH HIGH SOLIDS EPOXY AND POLYURETHANE SYSTEM PER SECTION 09960."

Item 1.62 **Drawing 65-S-03:** Replace Note 2 with the following:

"COAT INTERIOR OF DIGESTER STEEL COVER, AND INSIDE AND OUTSIDE OF COVER SKIRT WITH HIGH SOLIDS EPOXY SYSTEM PER SECTION 09960. COAT EXTERIOR OF DIGESTER STEEL COVER, COVER ANCHORAGE, METAL DIGESTER APPURTENANCES AND ACCESSORIES ON ROOF, AND ROOF MOUNTED PIPING AND SUPPORTS WITH HIGH SOLIDS EPOXY AND POLYURETHANE SYSTEM PER SECTION 09960."

Item 1.63 **Drawing 65-S-04:** Add the attached new drawing 65-S-04.

Item 1.64 **Drawing 65-S-05:** Add the attached new drawing 65-S-05.

Item 1.65 **Drawing 10-M-01 –** At Bottom Plan A, revise the callout for the PD pipe entering the channel adjacent to the 18" FA duct from **"6" PD"** to **"8" PD"**.

Item 1.66 **Drawing 10-M-01 –** At Section H, revise the callout for the PD pipe entering the channel below the 18" FA duct from **"6" PD"** to **"8" PD"**.

Item 1.67 **Drawing 90-A-01, Plan Check Notes** -- Add note as follows:
"2. For Geotechnical Data, refer to: Geotechnical Study, Water Pollution Control Plant Rehabilitation Project, San Leandro, CA, December 2010, Prepared by Fugro West, Inc. 1000 Broadway, Suite 200, Oakland, CA 94607. 510.268-0461.

Item 1.68 **Drawing 90-A-01, Site Diagram** -- Add note to "Accessible Path of Travel":
"Maximum slope to be less than 1:20 and maximum cross slope to be less than 2%."

Item 1.69 **Drawing 90-A-01, Building Data** – Revise "Minimum Number of Plumbing Fixtures" to read as follows:

"Minimum Plumbing Fixtures	Offices	1,896 SF/200 =	10 occupants
Estimated Occupant Load	Lab & E/S	1,712 SF/200 =	9 occupants
CPC Table A	Locker Rooms	1,383 SF/300 =	5 occupant
Total Occupant Load		**24 occupants**	
Male/Female Occupants		**12 Male & 12 Female**	

Minimum Number of Use	Occupancy Type - Office or Public Buildings – Employee	
Plumbing Fixtures CPC Table 4-1	**Male**	**Female**
	WC 1: 1 - 15	WC 1: 1 – 15*
	Urinal 1: 10 – 50	* 2 WC provided to equal total male WC + urinal
	Lavs 1 per 40	Lavs 1 per 40"

Item 1.70 **Drawing 90-A-04** -- Change title "Vertical Sun Control Schedule" to read "Exterior Sun Control Screen Schedule" and change title "Vertical Sun Control Types" to read "Exterior Sun Control Screen Types.

Item 1.71 **Drawing 90-A-05** -- Add Key Note 2 call out to area of pavement to be removed at grid A/3.8.

Item 1.72 **Drawing 90-A-10, Exterior Wall Types** -- Change Wall Type "E" to "E1". Add Wall Type E2, to read as follows: "E2 - Stucco, underlayment, 5/8" exterior grade gwb, 2 – 3-5/8" metal studs, R-19 batt insulation, 5/8" gwb." Change Wall Type reference "E" to "E2" at grid H, four (4) locations. Change Wall Type reference "E" to "E1" between grid C and F.7, two (2) locations.

Item 1.73 **Drawing 90-A-10, Equipment Legend** – Add "OFOI" (Owner Furnished Owner Installed) to Equipment Items 16, 17, INC, DW, and REF.

Item 1.74 **Drawing 90-A-10, Detail A** – Add 24"x24" floor access door 2 feet north of grid 20 and centered between fume hood 2 and the lab island counter. Add note "24"x24" floor access door, SMD".

Item 1.75 **Drawing 90-A-11, Room 90.16** – Add FRP Panels at walls behind Janitor's Sink, 4 feet in each direction from corner, 4 feet in height.

Item 1.76 **Drawing 90-A-13** -- Add Exit signs at Doors 9001, 9002,9007, 9024, and 9026. Add directional exit signs in Hall 2 at grid 9 and grid 3.8. Add note at exterior wall light: "Exterior night light, typ.".

Item 1.77 **Drawing 90-A-14, Detail D** -- Add "Knox Box" to wall adjacent to Entry Door 9001.

Item 1.78 **Drawing 90-A-14 – 43, General**– Change all "Stucco" references to read "Cement Plaster".

Item 1.79 **Drawing 90-A-15** -- Add General Note : " 2. All exterior window/door mullions to be designed to withstand 85 mph wind speed.".

Item 1.80 **Drawing 90-A-21, Detail B– Roof Assembly** - Change "4" Rigid Insulation, R30 Min." to read "Rigid Insulation, R30 Min."

Item 1.81 **Drawing 90-A-28, Detail B - South** -- Change toilet flush activator to open side of WC.

Item 1.82 **Drawing 90-S-04, Detail 4** -- Add note 3 to detail as follows:

"3. ANCHOR BOLTS SHALL BE GROUTED IN PLACE."

Item 1.83 **Drawing 90-S-05, Details 11** -- Delete detail 11 - DWG 90-S-05 and replace with revised detail included herewith on Sketch 1.01.

Item 1.84 **Drawing 90-S-06, Detail 9** -- Add note 13 to detail as follows:

"13. NAILS SHALL BE STAGGERED WHERE NAILS ARE SPACED 3" OR LESS ON CENTER."

Item 1.85 **Drawing 90-S-07** -- Replace this drawing in its entirety with the attached revised drawing.

Item 1.86 **Drawing 90-S-08** -- Replace this drawing in its entirety with the attached revised drawing.

Item 1.87 **Drawing 90-S-10** -- Changed collector plate size at grid 8 as follows:

Revise note from " (N) PL ¼" x 2 ½" wide cont btwn lines A & J" to "(N) PL ¼" x 3" WIDE CONT COLLECTOR BTWN LINES A & J".

Item 1.88 **Drawing 90-S-10** -- Changed collector strap sizes at grid E as follows:

Revise note from "(N) Cont CS16 btwn lines 1 & 9" to "(N) CONT CMST12 BTWN LINES 1 & 9 & (N) CONT CS16 COLLECTOR STRAPS BTWN LINES 7 & 9".

Item 1.89 **Drawing 90-S-11** -- Replace this drawing in its entirety with the attached revised drawing.

Item 1.90 **Drawing 90-S-14** -- Replace this drawing in its entirety with the attached revised drawing.

Item 1.91 **Drawing 90-S-16, Detail 5** -- Delete detail 5 - DWG 90-S-16 and replace with revised detail included herewith on Sketch 1.02.

Item 1.92 **Drawing 90-S-21, Detail 3** -- Delete detail 3 - DWG 90-S-21 and replace with revised detail included herewith on Sketch 1.03.

Item 1.93 **Drawing 90-S-22, Detail 1** -- Delete detail 1 - DWG 90-S-22 and replace with revised detail included herewith on Sketch 1.04.

Item 1.94 **Drawing 90-S-22, Detail 3** -- Delete detail 3 - DWG 90-S-22 and replace with revised detail included herewith on Sketch 1.05.

Item 1.95 **Drawing 90-E-01** -- Add General Note as follows: "All Electrical equipment shall have a UL Design Listing/Number. Any equipment not listed will be required to be field tested and certified by an approved testing agency. It is the responsibility of the Owner and his Design/Construction team to notify the Building Department if field testing is required for any equipment without a UL or equivalent listed label approved by the San Leandro Building Department. Proof of equipment certification will need to be submitted and approved before Certificate of Occupancy can be issued."

Item 1.96 **Drawing 90-E-05** -- Add Exit sign at Doors 9002 (grid A/3.8) and 9024 (grid E/13). Add directional exit sign in Hall 2 at grid 3.8.

Item 1.97 **Drawing 90-E-09** -- Add signatures and Mandatory Lighting Control information to the Title 24 forms. See attached revised sheet included herewith.

Item 1.98 **Drawing 90-E-10** -- Add list of equipment requiring testing on page 4 of 4, LTG-1C. See attached revised sheet included herewith.

ATTACHMENTS:

The following Attachments are appended to Addendum No. 1 and can be downloaded from City of San Leandro website at the following website address:

www.sanleandro.org/depts/finance/purchasing/bids

1. Specifications:
    a. Lane Closure Form
    b. Revised City Debris Recycling Statement – Appendix B
2. Drawings:
    a. 13-D-01, Existing Headworks and Influent Pump Station – Lower Plan and Section
    b. 13-D-02, Existing Headworks and Influent Pump Station – Plan
    c. 13-D-04, Existing Headworks and Influent Pump Station – Section
    d. 13-D-05, Existing Headworks and Influent Pump Station – Section
    e. 01-L-09, Irrigation Legend and Notes – All Areas
    f. 01-L-10, Irrigation Plan – Area 1
    g. 01-L-13, Irrigation Plan – Area 4
    h. 01-L-15, Irrigation Plan – Area 6
    i. 65-S-04, Digester No. 4 – Plan and Details
    j. 65-S-05, Digester No. 4 – Sections
    k. 90-S-07, Administration Control Building – Typical Wood Details
    l. 90-S-08, Administration Control Building – Schedule of Special Inspection Services

m. 90-S-11, Administration Control Building – Admin/Entry Building Foundation Plan
n. 90-S-14, Administration Control Building – Lab Building Roof Framing Plan
o. 90-E-09, Administration Control Building – Building Compliance Forms (Part 1 of 2)
p. 90-E-10, Administration Control Building – Building Compliance Forms (Part 2 of 2)

3. Sketches:
   a. 1.01 - Contract DWG 90-S-05, Detail 11
   b. 1.02 – Contract DWG 90-S-16, Detail 5
   c. 1.03 – Contract DWG 90-S-21, Detail 3
   d. 1.04 – Contract DWG 90-S-22, Detail 1
   e. 1.05 - Contract DWG 90-S-22, Detail 3

PLEASE NOTE BID OPENING REMAINS TUESDAY APRIL 5, 2011 AT 3:00 PM

Acknowledge this addendum in your Proposal. The bid opening date and time, April 5, 2011 at 3:00 PM, remains unchanged. If you have any questions, please call Kevin Chun, Project Manager, at 577-3412.

Very truly yours,

Kenneth Joseph, P.E., City Engineer
Engineering and Transportation Department
kjoseph@sanleandro.org
www.sanleandro.org

ACKNOWLEDGEMENT-Addendum 1

I hereby acknowledge receipt of this Addendum for the above noted project.

(Include a signed copy of this form in your proposal)

_____ Date: _____
(Signature)

_____
(Business Name – Please Print)

cc: Internal Plans & Specs Distribution List
COSL Current Plan-holders

Sketch 1.01 Contract DWG 90-S-05, Detail 11

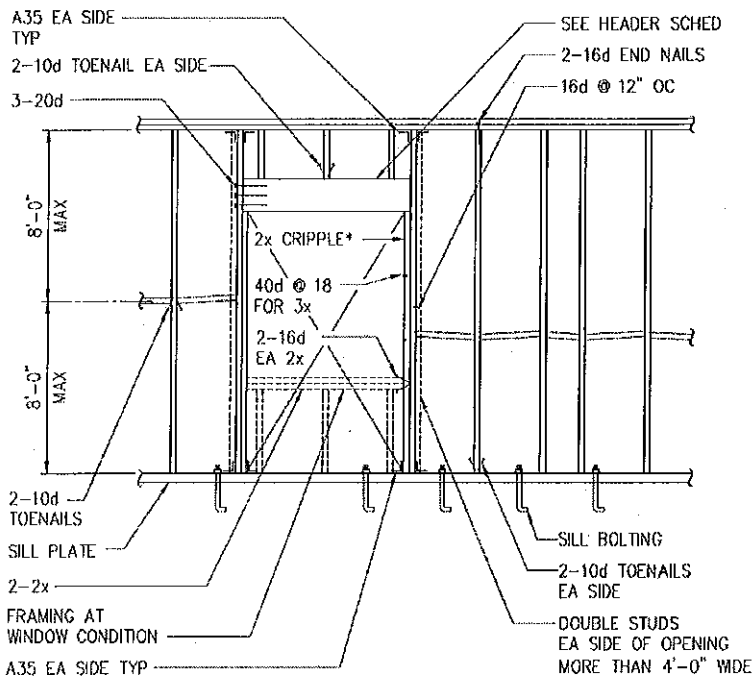

*USE 3x CRIPPLE WHERE SPAN EXCEEDS 6'-0"

HEADER SCHEDULE				
SPAN	3'-0" MAX	4'-0" MAX	6'-0" MAX	OVER 6'-0"
2x4 STUDS	2-2x4 OR 4x4	2-2x6 OR 4x6	4x8	SEE SPECIFIC DETAILS ON DRAWINGS
2x6 STUDS	3-2x6 OR 4x6 FLAT	3-2x6 OR 6x6	3-2x8 OR 6x8	

11 TYP

FRAMING AT WINDOW/DOOR OPENING

SCALE: NTS
FILE: 09-S-05

Sketch 1.02 **Contract DWG 90-S-16, Detail 5**

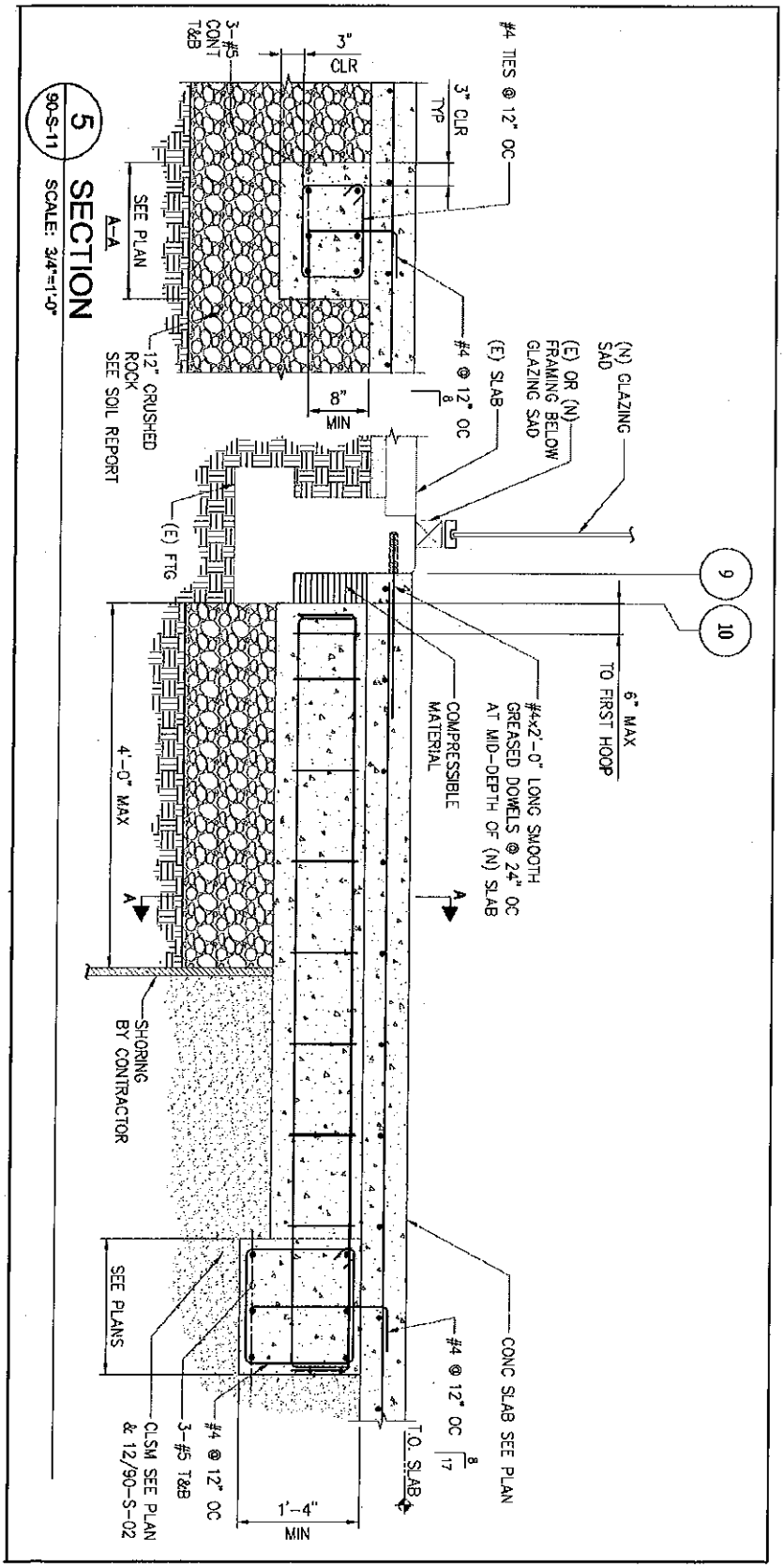

Sketch 1.03 **Contract DWG 90-S-21, Detail 3**

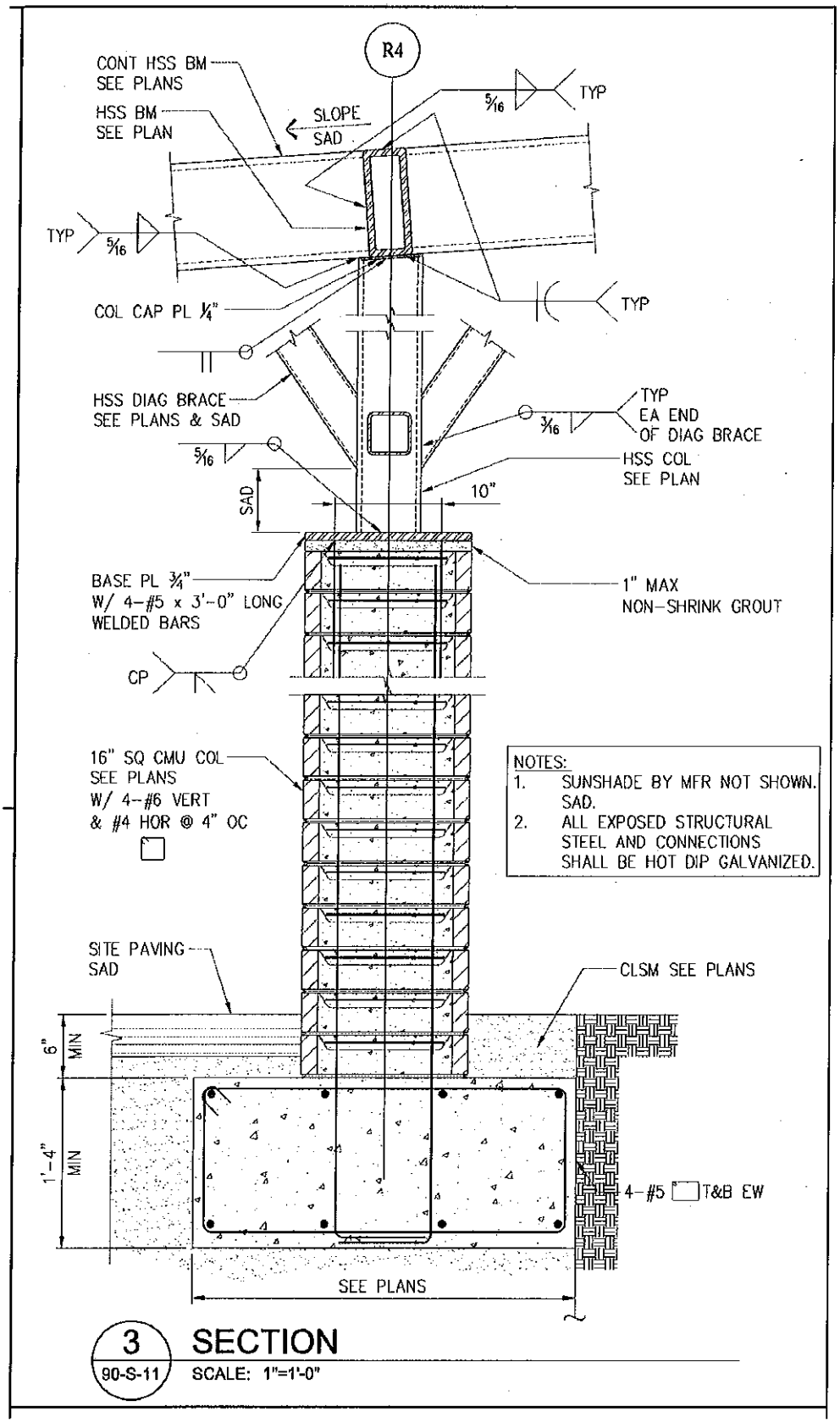

Sketch 1.04 **Contract DWG 90-S-22, Detail 1**

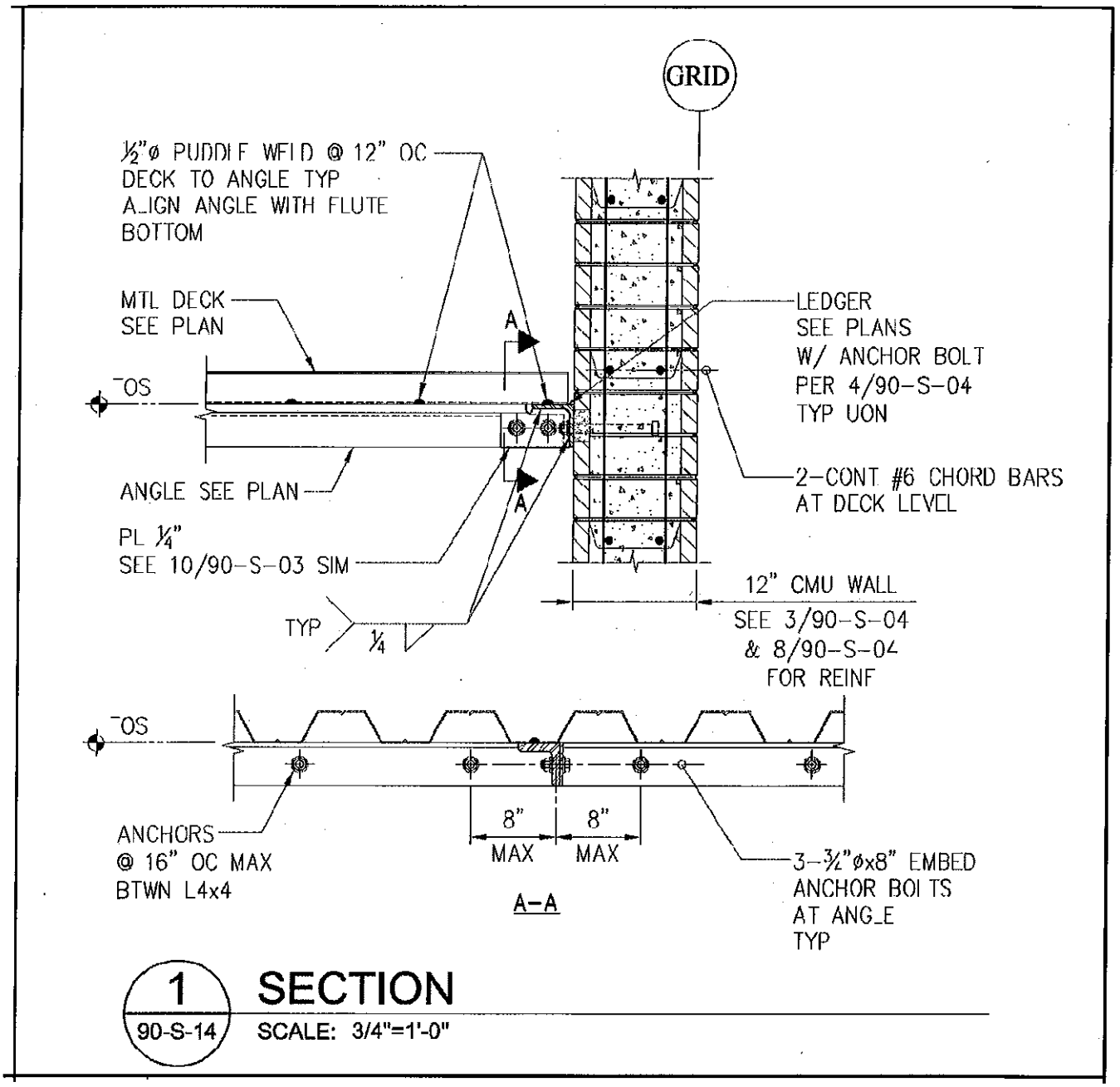

Sketch 1.05 **Contract DWG 90-S-22, Detail 3**

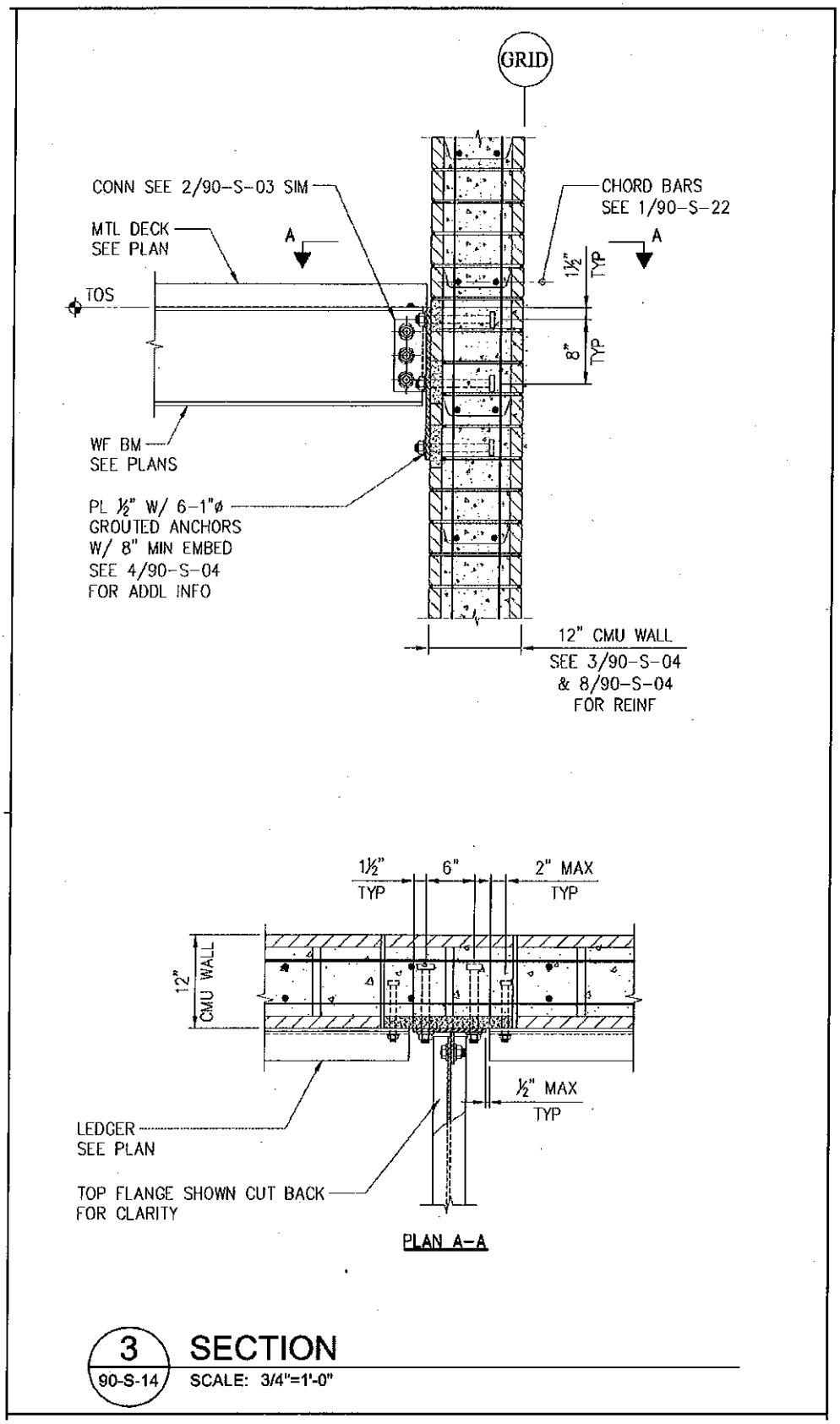

LANE CLOSURE REQUIREMENTS

CHART NO. 1

LOCATION: Davis Street | **DIRECTION OF TRAVEL:** Eastbound

FROM HOUR to HOUR	a.m. 12	1	2	3	4	5	6	7	8	9	10	11	p.m. 12	1	2	3	4	5	6	7	8	9	10	11	12
Mondays through Thursdays	X	X	X	X	X	X	X	1	1	1	1	1	1	1	1	1	1	1	X	X	X	X	X	X	X
Fridays	X	X	X	X	X	X	X	1	1	1	1	1	1	1	1	1	1	1	X	X	X	X	X	X	X
Saturdays	X	X	X	X	X	X	X	1	1	1	1	1	1	1	1	1	1	1	X	X	X	X	X	X	X
Sundays	X	X	X	X	X	X	X	1	1	1	1	1	1	1	1	1	1	1	X	X	X	X	X	X	X

Flashing Arrow Board Required (mark one): **YES** ☒ **NO** ☐

LEGEND:

0 - Roadway may be closed in direction of travel.
1 - Provide at least one through lane open in direction of travel.
2 - Provide at least two through lanes open in direction of travel.
3 - Provide at least three through lanes open in direction of travel.
W - No lane closure permitted; work permitted anywhere that does not require lane closure.
X - No lane closure permitted; no work permitted on roadway.

REMARKS: Work in roadway on Saturday and Sunday requires written authorization of the Engineer

Approved by Traffic Operations Engineer: Robert N. Chen **Date:** 03/07/2011

Note: Minor deviations from the requirements of this section concerning lane closure hours that do not change the cost of the work may be permitted upon the written request of the Contractor, if in the sole opinion of the Engineer, public traffic will be better served and the work expedited. These deviations shall not be adopted by the Contractor until the Engineer has approved the deviations in writing.

CHART NO. 2

LOCATION: Davis Street | **DIRECTION OF TRAVEL:** Westbound

FROM HOUR to HOUR	a.m. 12	1	2	3	4	5	6	7	8	9	10	11	p.m. 12	1	2	3	4	5	6	7	8	9	10	11	12
Mondays through Thursdays	X	X	X	X	X	X	X	1	1	1	1	1	1	1	1	1	1	1	X	X	X	X	X	X	X
Fridays	X	X	X	X	X	X	X	1	1	1	1	1	1	1	1	1	1	1	X	X	X	X	X	X	X
Saturdays	X	X	X	X	X	X	X	1	1	1	1	1	1	1	1	1	1	1	X	X	X	X	X	X	X
Sundays	X	X	X	X	X	X	X	1	1	1	1	1	1	1	1	1	1	1	X	X	X	X	X	X	X

Flashing Arrow Board Required (mark one): **YES** ☒ **NO** ☐

LEGEND:

0 - Roadway may be closed in direction of travel.
1 - Provide at least one through lane open in direction of travel.
2 - Provide at least two through lanes open in direction of travel.
3 - Provide at least three through lanes open in direction of travel.
W - No lane closure permitted; work permitted anywhere that does not require lane closure.
X - No lane closure permitted; no work permitted on roadway.

REMARKS: Work in roadway on Saturday and Sunday requires written authorization of the Engineer

Approved by Traffic Operations Engineer: Robert N. Chen **Date:** 03/07/2011

Note: Minor deviations from the requirements of this section concerning lane closure hours that do not change the cost of the work may be permitted upon the written request of the Contractor, if in the sole opinion of the Engineer, public traffic will be better served and the work expedited. These deviations shall not be adopted by the Contractor until the Engineer has approved the deviations in writing.

Debris Recycling Statement

Per Chapter 3-7 of the San Leandro Municipal Code, all asphalt and concrete and 50% of all other materials generated at a project site must be recycled for projects with a valuation in excess of $100,000. Permit applicants must demonstrate compliance by completing and submitting a Debris Recycling Statement (DRS) prior to permit issuance and by submitting receipts from all recycling and disposal facilities within five (5) days of the conclusion of the project. **The Permit Applicant may direct the general contractor to submit the necessary documentation. If a general contractor has not been selected prior to permit issuance, the Permit Applicant must submit a revised DRS once a contractor has been selected.**

Section 1 – Project Information

1. Project Name/Address: _____
2. Building Permit #: _____
3. Contractor Name: _____ Primary Contact: _____
   Address: _____
   Phone: _____ Fax: _____
4. Permit Applicant Name (if different from contractor): _____
   Address: _____
   Phone: _____
5. Describe the project?
   - ☐ Commercial New Construction
   - ☐ Demolition
   - ☐ Equipment Installation
   - ☐ Residential New Construction
   - ☐ Residential Remodel
   - ☐ Roof
   - ☐ Seismic Retrofit
   - ☐ Site Work
   - ☐ Tenant Improvement
   - ☐ Other: _____

Section 2 – Debris Management Information

1. How will you manage the debris onsite?
   - ☐ Separate materials onsite and self-haul to various recycling facilities
   - ☐ Self-haul mixed material loads to a C&D Recycling Facility **(See list on reverse)**
   - ☐ Obtain a debris box from the local franchised waste hauler **(See list on reverse)**
   - ☐ Use a state licensed construction clean-up contractor (classification D63) to separate materials onsite and deliver to local recycling facilities.
2. What types of materials will you recycle from the jobsite?
   - ☐ Appliances
   - ☐ Asphalt
   - ☐ Brick or Masonry Tile
   - ☐ Cardboard
   - ☐ Carpet & Padding
   - ☐ Ceiling Tiles
   - ☐ Concrete
   - ☐ Dirt/Clean Fill
   - ☐ Drywall
   - ☐ Fixtures (Sinks, Toilets, etc.)
   - ☐ Metal - Scrap
   - ☐ Landscape Debris
   - ☐ Masonry Tile
   - ☐ Wood, Lumber, Pallets
   - ☐ Roofing Material
   - ☐ Other _____
3. Who will remove the debris from the jobsite? (Check all that apply)
   - ☐ Self
   - ☐ Subcontractors
   - ☐ Local Franchised Waste Hauler
   - ☐ Onsite Cleanup Contractor

4. Will you remove any hazardous materials such as asbestos or lead-based paint from the project site?
   - ☐ Yes
   - ☐ No

   If yes, please explain:

   _____

5. List all disposal and recycling facilities where debris will be taken.

Facility Name	Address	City
1.		
2.		
3.		
4.		

Section 3 – Certification

By signing below, I herby certify that the information reported is complete and accurate to the best of my knowledge. In addition, I agree to submit all weight tags (recycling and disposal) to the City of San Leandro no later than five (5) working days from the conclusion of this project and I understand that I must recycle all asphalt/concrete and 50% of all other materials generated during the project.

_____

Signature

_____

Name of person completing this form Phone number

Section 4 – Haulers and Recycling Facilities

Local Franchised Waste Haulers
(Contact the hauler that provides service in the area where your project is located)

1. Alameda County Industries: (510) 357-7282
2. Waste Management of Alameda County: (510) 613-8710

Per sections 3-6-320 and 3-6-340 of the San Leandro Municipal Code, contractors cannot obtain construction & demolition (C&D) debris box service from anyone other than the City's franchised waste hauler regardless of whether the material is intended for disposal, recycling, composting or otherwise.

Mixed C&D Facilities
A Mixed C&D Facility accepts loads of construction and demolition debris that are not separated by material type at the project site. The facility processes mixed loads for the purpose of recovering re-usable and recyclable materials.

1. Davis Street Recycling and Transfer Station, San Leandro (510) 638-2303
2. Fremont Recycling & Transfer Station, Fremont (510) 252-0500
3. Guadalupe Landfill, San Jose (408) 268-1670
4. Marin Resource Recovery Center, San Rafael (415) 485-5647
5. Newby Island Landfill, Milpitas (408) 262-1401
6. San Francisco Recycling & Disposal, San Francisco (415) 330-1400
7. Vasco Road Landfill & Recycling. Livermore (925) 447-0491
8. Zanker Material Processing Facility, San Jose (408) 263-2384

For a comprehensive list of recycling facilities pick up a copy of the *Builders Guide to Reuse and Recycling* or visit the Recycling + Purchasing Wizard online at www.stopwaste.org.