City of San Leandro
Civic Center, 835 E. 14th Street
San Leandro, California 94577

**SAN LEANDRO BLVD. (SLB) DAVIS ST. SEWER CAPACITY IMPROVEMENTS – PHASE 1**
**PROJECT NO. 10-593-52-247**
**BID NO. 10-11.006**

## ADDENDUM NO. 1

April 13, 2011

TO: All Prospective Bidders

The additions and/or deletions contained in this Addendum shall be made a part of the plans and specifications and contract documents for the above described project, and shall be subject to all applicable requirements there under, as if originally shown and/or specified.

### THE CONTRACT DOCUMENTS SHALL BE REVISED AS FOLLOWS:

### CONTRACT PRICE SCHEDULE

Revised Price Schedule is attached; replace the original schedule and use the attached price schedule "Contract Price Schedule – Addendum 1" with the bid proposal. Note that Bid Item 17 : "Replace Duratherm Per Exhibit A at Station ~5+65 to ~5+77" has been added at a quantity of 80SF.

### CONTRACT SPECIFICATIONS BOOK

Contractor is directed to add the attached specification Exhibit A "DuraTherm Utility Repairs" to the back of the specifications book. The stamped asphalt must be in the Wagon Wheel Pattern from Integrated Paving Concepts.

**PLEASE NOTE:**
**Bid opening date has not changed. The bid opening date is Tuesday April 19 2011, at 3:00PM.**

Acknowledge this addendum in your Proposal. If you have any questions, please call the Project Engineer, Nicole Noronha Castelino, at (510) 577-3429.

Sincerely,

Kenneth Joseph, P.E., City Engineer
Engineering and Transportation Department

Stephen H. Cassidy, Mayor

City Council: Pauline Russo Cutter, Ursula Reed, Michael J. Gregory, Diana M. Souza, Jim Prola, Joyce R. Starosciak

## ACKNOWLEDGEMENT FOR ADDENDUM NO. 1

I hereby acknowledge receipt of this Addendum for the above noted project.

_____ Date: _____
(Signature)

_____
(Company Name – Please Print)

cc: N. Noronha, N. Thom, A. Osakwe, M. Schaffer, Kiosk
COSL Current Plan-holders

# CONTRACT PRICE SCHEDULE – ADDENDUM 1

| Item No. | Description | Estimated Quantity (A) | Unit of Measure | Item UNIT Price (in Words) | Item UNIT Price (in Figures) (B) | TOTAL PRICE (in Figures) (AxB) |
|---|---|---|---|---|---|---|
| 1. | Mobilization | 1 | LS | | | |
| 2. | Traffic Control and Construction Area Signs | 1 | LS | | | |
| 3. | 18" Sanitary Sewer Pipe | 900 | LF | | | |
| 4. | Type A SSMH | 4 | EA | | | |
| 5. | Drop Connection at new SSMH | 1 | EA | | | |
| 6. | Grout 6" diameter pipe | 385 | LF | | | |
| 7. | Roadway Striping | 1 | LS | | | |
| 8. | Sheeting, Shoring and Bracing | 1 | LS | | | |
| 9. | Permanent Asphalt Concrete | 490 | TON | | | |
| 10. | Hauling and Disposal of Class 1 trench spoils | 1350 | TON | | | |
| 11. | 6" VCP Sanitary Sewer Pipe | 8 | LF | | | |
| 12. | 12" Sanitary Sewer Pipe | 15 | LF | | | |
| 13. | Hauling and Disposal of Class 2 Trench Spoils | 1350 | TON | | | |
| 14. | Permanent Portland Concrete Curb | 30 | LF | | | |

| | | | | | |
|---|---|---|---|---|---|
| 15. | Permanent Portland Concrete Flatwork | 50 | SF | _____ | |
| 16 | Demo Manhole Per Section 306-5 of Contract Specs | 1 | EA | _____ | |
| 17 | Repair Duratherm per Exhibit A at Station ~5+65 to ~5+77 | 80 | SF | _____ | |

**TOTAL BID:** _____
(In Words)

**TOTAL BID:** _____
(In Figures)

**UNITS OF MEASURE:**

| Abbreviation | Word or Words |
|---|---|
| LF | Linear Feet |
| SF | Square Feet |
| SY | Square Yards |
| CY | Cubic Yards |
| TN | Tons (2,000 lbs./907.2 kgs.) |
| LS | Lump Sum |
| EA | Each |
| MO | Months |

**NOTE:** The estimate of construction quantities set forth herein is approximate only, being given as a basis for the comparison of bids. The City does not expressly nor by implication agree that the actual amount of work will correspond therewith, and reserves the right to change the amount of any class or portion of the work or to omit portions of the work as may be deemed necessary or expedient by the Engineer in accordance with section 3-2.1.1 of the Special Provisions. All bids will be compared on the basis of the Engineer's Estimate of the quantities of the work to be done. The undersigned declares, by signing this proposal, that the bidder has carefully checked all of the above figures and understands that the City shall not be responsible for any errors or omissions on the part of the undersigned in making up this bid.

EXHIBIT A

DuraTherm®

# DuraTherm Utility Repairs

1. Make saw cut. If DuraTherm grout line travels parallel with saw cut, make cut 4 – 6" to the <u>inside</u> of the grout line.

   The repair can be hidden in the grout line. If it is not possible to cut parallel with grout line, be aware that the saw cuts may be noticeable when finished.

2. Remove DuraTherm and base material, make necessary repairs. Fill with base material and compact well.

3. After base material is installed, heat 4 – 6" back from saw cut. If saw cut is parallel to grout line, heat to grout line. Use excessive heat here but shield the area past the 4 – 6" , or past grout line, from heat.

4. Temperatures should be high enough (200-300F) so that asphalt is completely softened after heating. Burning of the 4 – 6" of asphalt will not matter as it will be removed.

   Asphalt past the 4 – 6" must not be heated over 200F. This asphalt should be shielded from the heat of the StreetHeat gun or torch that is being used to heat the asphalt that will be removed.

5. Use a chisel, shovel or chisel like tool, to remove the heated 4 – 6" of asphalt on a 30-45 degree angle.

   If the saw cut was made parallel to grout line, as described in step 1, remove asphalt up to the center of the grout line. *When thermoplastic material is replaced, the saw cut will be hidden by the DuraTherm.

6. Before placing any asphalt, soften angled asphalt by gently heating. Do not take temperatures above 320F. Asphalt should be softened appropriately so a thermal bond will occur between new and existing asphalt.

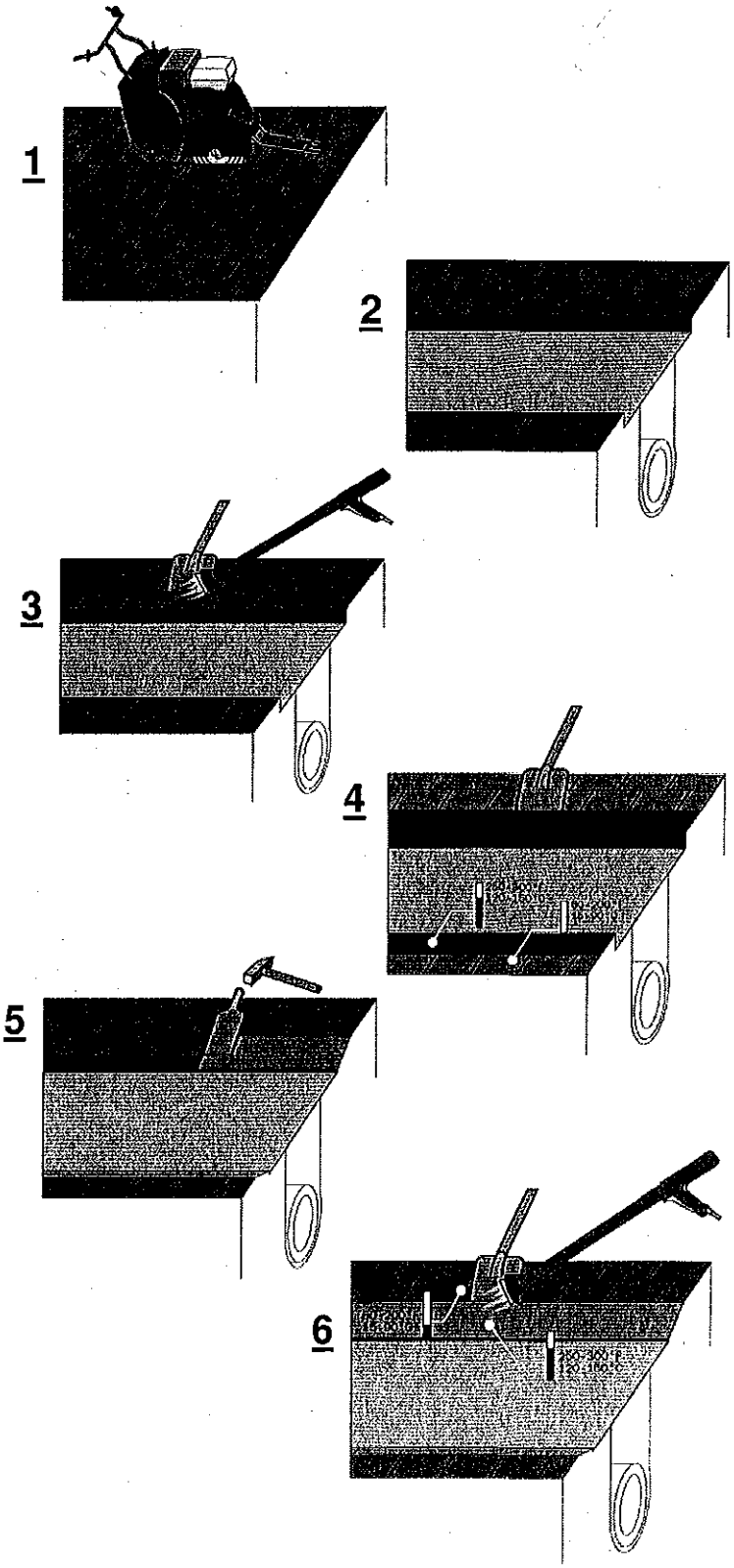

# DuraTherm Utility Repairs – Cont'd

7. Place asphalt base when angled asphalt is hot, so thermal bonding takes place.

8. Compact asphalt base.

9. Reheat angled asphalt back up to desired temperatures gently without burning asphalt or exceeding 320F.

10. Place asphalt, again ensuring that temperatures are 250-300F on angled asphalt. A good thermal bond must take place between new asphalt and aged angled asphalt.

    Angling the asphalt and fusing together thermally will ensure that water seepage and cracking will be minimized.

11. Compact with a roller or vibratory plate compactor using proper compaction practices.

    When compacted, new asphalt should sit flush with existing asphalt.

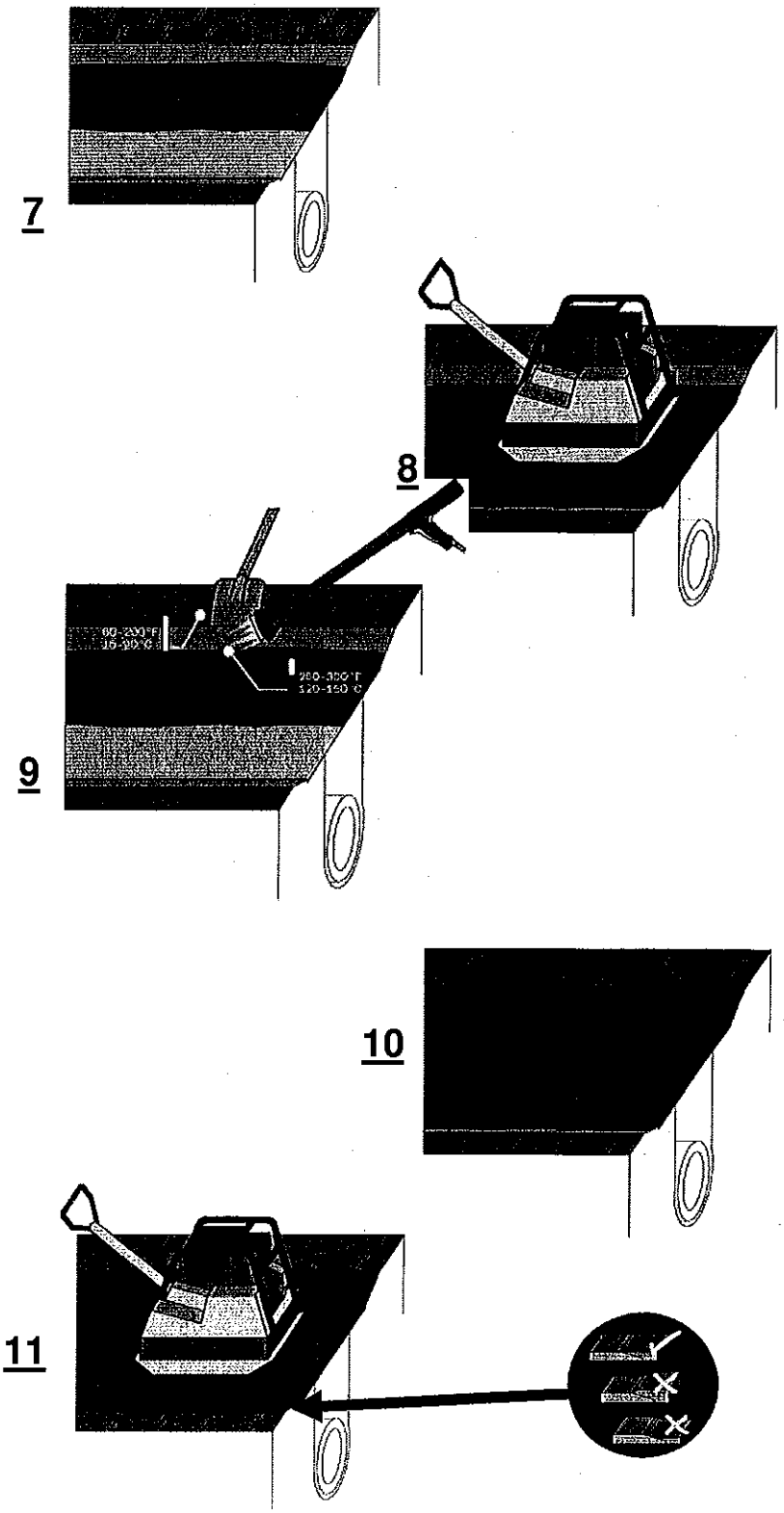

# DuraTherm Utility Repairs – Cont'd

**After the asphalt repair has been made, an Authorized DuraTherm Applicator will be able to perform the following steps using similar practices as the initial installation.**

12

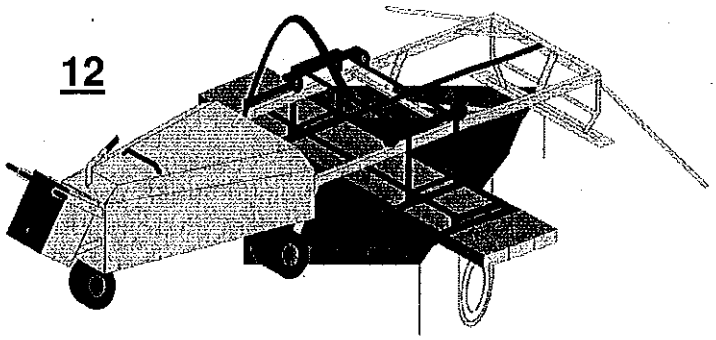

**12.** Heat new asphalt using the SR-60, never exceeding 320F. Monitor surface closely and where possible, avoid excessive heating of existing DuraTherm.

13

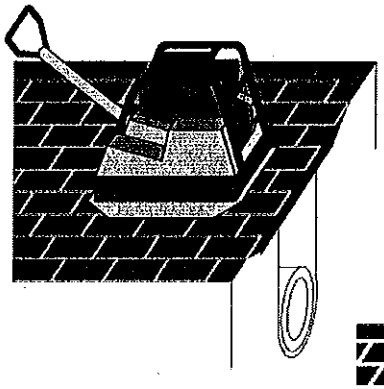

**13.** After desired temperatures and heat depth has been achieved, place the DuraTherm Stamping Grid on the new asphalt and imprint using a vibratory plate compactor.

14

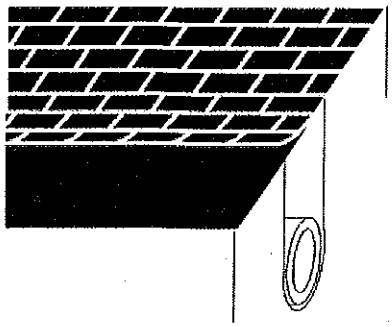

**14.** Clean asphalt thoroughly using a stiff bristle broom and an air blower. Place DuraTherm thermoplastics in the impression created, overlapping slightly on to existing DuraTherm thermoplastic.

**15.** Using the SR-60, melt DuraTherm material in place.

Do not exceed 320F. Apply heat gently until material is bonded.

15

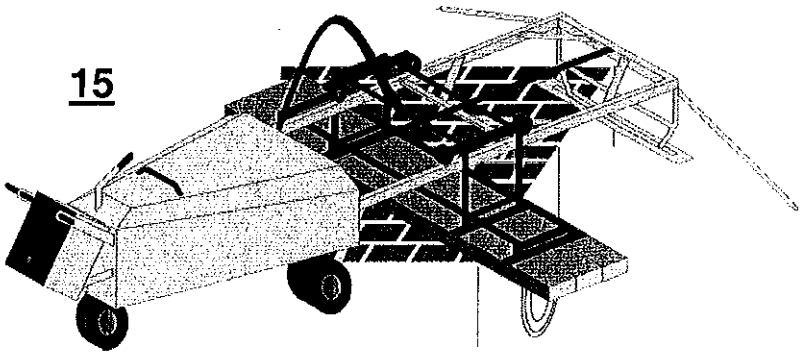

**16.** Let cool to 150F before opening to traffic.