City of San Leandro
Civic Center, 835 E. 14th Street
San Leandro, California 94577
www.sanleandro.org

HESPERIAN/SPRINGLAKE RAILROAD CROSSING IMPROVEMENTS
PROJECT NO. 12-150-38-325

ADDENDUM NO. 1

June 5, 2014

TO: All Prospective Bidders

The additions and/or deletions contained in this Addendum shall be made a part of the plans and specifications and contract documents for the above described project, and shall be subject to all applicable requirements thereunder, as if originally shown and/or specified.

THE FOLLOWING PORTIONS OF THE CONTRACT ARE REVISED:

Contract price schedule in the proposal (page 7-9) - 3 Pages
Contract price schedule in the agreement (page 39-41) – 3 Pages
Plan Sheet 2 – 1 Sheet
Attachment A – 56 Pages

THE FOLLOWING PORTIONS OF THE CONTRACT BOOK ARE ADDED:

Section 206-7
Section 304-5
Exhibit A – 3 Pages

SECTION 206-7-METAL FENCE

Section 206-7 "Metal Fence " is added to the Standard Specifications and these Special Provisions.

206 – 7.1 MATERIALS

METAL FENCE: Tube Steel shall be ASTM A500 Grade A. Flat Bar shall be A36. Baked-Enamel, Powder-Coat Finish: Factory applied manufacturer's standard, baked, polyester-TGIC, powder-coat finish complying with finish manufacturer's written instructions for surface preparation, including pretreatment, application, baking, and minimum dry film thickness.

HINGE: Shall be SureClose57SF W Item #75057124 Self Closing from 90 degrees or approved equal.

206 - 7.2 SUBMITTALS:

Products:

1. One (1) Shop Drawing of each metal component (metal fence)
2. One (1) RAL cut sheet of powder coat of each color/type per plans.

304-5 STEEL FENCE FABRICATION AND INSTALLATION

Steel Fence and concrete footings shall be fabricated and installed per plans and details.

Contractor shall become familiar with existing site conditions, verify dimensions, and obtain other information as may be necessary for a complete installation. Notify the Engineer of unsatisfactory conditions prior to commencement of work.

Stephen H. Cassidy, Mayor

City Council: Pauline Russo Cutter, Michael J. Gregory, Benny Lee, Jim Prola, Ursula Reed, Diana M. Souza

304-5.1 FABRICATION AND INSTALLATION

Contractor shall be responsible to fabricate off-site, deliver and install all steel fence plumb and true adjacent to new or existing pavement and secured in place. Frame shall be shop welded to posts. Gate shall be shop welded. Powder coat shall take place after shop welding and prior to delivery. Assemble the shop welded frame and posts and gate in the field. If sidewalk is existing, it shall be Contractor's option to replace the flag of concrete or core drill the foundation. If sidewalk is new, Contractor shall install the gate prior to pouring sidewalk. All edges shall be smooth and any damage during fabrication, delivery or installation shall be retouched with paint or replaced in full, at the discretion of the Engineer. Finish work shall be firm, well anchored, in true alignment, properly squared, with smooth clean uniform appearance, without holes, cracks, discoloration, distortion, stains, or marks. Provide all miscellaneous metal items required for completion of the work, even though not shown or specified.

304-5.2 MEASUREMENT AND PAYMENT –FABRICATION AND INSTALLATION

The Contract price paid for Bid Item No. (27) shall include full compensation for all work listed in Section 304-5.1 at each location where the bid item is to be installed per the Contract Plans. All work including but not limited to steel fence, foundations, signage and all other appurtenances shall be included in the price paid for this item.

Revised sections are attached to this addendum. Revisions to Attachment A are re-issued in its entirety.

PLEASE NOTE:

This addendum contains a new price schedule. The new schedule must be included with the bid; the old schedule is no longer valid and should be discarded.

The Bid Opening Date Remains 3:00 PM, Wednesday, June 11, 2014.

Acknowledge this addendum and include a signed copy of the Acknowledgement Form in your Proposal. If you have any questions, please call the Project Engineer, Nicole Noronha Castelino, at (510)577-3429 or via email at ncastelino@sanleandro.org.

Sincerely,

Kenneth Joseph, P.E., City Engineer
Engineering and Transportation Department
kjoseph@sanleandro.org

ACKNOWLEDGEMENT ADDENDUM NO. 1

(Include a signed copy of this form in your proposal)

I hereby acknowledge receipt of this Addendum for the above noted project.

_____ Date: _____
(Signature)

_____
(Business Name – Please Print)

CONTRACT PRICE SCHEDULE

Item No.	Description	Estimated Quantity (A)	Unit of Measure	Item UNIT Price (in Words)	Item UNIT Price (in Figures) (B)	TOTAL PRICE (in Figures) (AxB)
1.	Install curb and gutter per drawing 100 case 3101 including 2' tie in paving	200	LF	_____ _____		
2.	Install sidewalk per drawing 100 case 3101	2,000	SF	_____ _____		
3.	Install wheelchair ramp per drawing 106A and B case 3101 including truncated domes	750	SF	_____ _____		
4.	Traffic Control per Section 7-10.3	1	LS	_____ _____		
5.	Furnish and Install Sign W110-11A mounted to (E) Street Light Pole	1	EA	_____ _____		
6.	Install Cast In Place domes per drawing 106c and 106D case 3101	12	EA	_____ _____		
7.	Install Vertical Curb per drawing 100 case 3101 including 2' tie in paving	80	EA	_____ _____		
8.	Install 4' Pedestrian Push Button Pole and Foundation per Drawing 500A and 500B Case 3101	2	EA	_____ _____		
9.	Install 3" Conduit per Section Section 306	50	LF	_____ _____		
10.	Install City Provided APS System and Push Buttons per Section 307-4.10	1	LS	_____ _____		
11.	Furnish and Install Signal Head mounting Bracket per Section 307-4.6	7	EA	_____ _____		
12.	Install Stamped Colored Concrete per Section 303-6	50	SF	_____ _____		
13.	Install Driveway per drawing 102 case 3101	200	SF	_____ _____		
14.	Striping per Section 310	1	LS	_____ _____		

PROPOSAL FORMS

Item No.	Description	Estimated Quantity (A)	Unit of Measure	Item UNIT Price (in Words)	Item UNIT Price (in Figures) (B)	TOTAL PRICE (in Figures) (AxB)
15.	Furnish and Install AC pavement at RR panels per Section 302-5	60	TON	_____ _____		
16.	Remove and Salvage Pole Mounted Head per 307-4.6	8	EA	_____ _____		
17.	Furnish and Install Pedestrian Head per 307-4.6	4	EA	_____ _____		
18.	Furnish and Install Pullbox – No.5 per 307-2.4	2	EA	_____ _____		
19.	Furnish and Install Conductors/DLC Cable per 307-2.6	1730	LF	_____ _____		
20.	Furnish and Install Vehicle Head - 12" Sections with Backplate per 307-4.6	6	EA	_____ _____		
21.	Remove (E) Pedestrian Push Button from Pole to Remain per Section 307-1.5	3	EA	_____ _____		
22.	Remove 4' Pedestrian Push Button Pole and Push Button	2	EA	_____ _____		
23.	Furnish and Install 1B Pole per Drawing 500A and 500B Case 3101	1	EA	_____ _____		
24.	Fog Seal per Section 302-12	1	LS	_____ _____		
25.	Furnish and Install Pedestrian Barricade per Caltrans detail ES-7Q Type 1	2	EA	_____ _____		
26.	Furnish and Install Street Light Pole – 15TS and LED Street Light per Drawing 500A and 500B Case 3101	1	EA	_____ _____		
27.	Furnish and Install Pedestrian Fence and Gates Per Addendum 1	4	EA	_____ _____		

PROPOSAL FORMS

TOTAL BID: _____
(In Words)

TOTAL BID: _____
(In Figures)

UNITS OF MEASURE:

Abbreviation	Word or Words
LF	Linear Feet
SF	Square Feet
SY	Square Yards
CY	Cubic Yards
TN	Tons (2,000 lbs./907.2 kgs.)
LS	Lump Sum
EA	Each
MO	Months

NOTE: The estimate of construction quantities set forth herein is approximate only, being given as a basis for the comparison of bids. The City does not expressly nor by implication agree that the actual amount of work will correspond therewith, and reserves the right to change the amount of any class or portion of the work or to omit portions of the work as may be deemed necessary or expedient by the Engineer in accordance with section 3-2.1.1 of the Special Provisions. All bids will be compared on the basis of the Engineer's Estimate of the quantities of the work to be done. The undersigned declares, by signing this proposal, that the bidder has carefully checked all of the above figures and understands that the City shall not be responsible for any errors or omissions on the part of the undersigned in making up this bid.

PROPOSAL FORMS

CONTRACT PRICE SCHEDULE

Item No.	Description	Estimated Quantity (A)	Unit of Measure	Item UNIT Price (in Words)	Item UNIT Price (in Figures) (B)	TOTAL PRICE (in Figures) (AxB)
1.	Install curb and gutter per drawing 100 case 3101 including 2' tie in paving	200	LF	_____ _____		
2.	Install sidewalk per drawing 100 case 3101	2,000	SF	_____ _____		
3.	Install wheelchair ramp per drawing 106A and B case 3101 including truncated domes	750	SF	_____ _____		
4.	Traffic Control per Section 7-10.3	1	LS	_____ _____		
5.	Furnish and Install Sign W110-11A mounted to (E) Street Light Pole	1	EA	_____ _____		
6.	Install Cast In Place domes per drawing 106c and 106D case 3101	12	EA	_____ _____		
7.	Install Vertical Curb per drawing 100 case 3101 including 2' tie in paving	80	EA	_____ _____		
8.	Install 4' Pedestrian Push Button Pole and Foundation per Drawing 500A and 500B Case 3101	2	EA	_____ _____		
9.	Install 3" Conduit per Section Section 306	50	LF	_____ _____		
10.	Install City Provided APS System and Push Buttons per Section 307-4.10	1	LS	_____ _____		
11.	Furnish and Install Signal Head mounting Bracket per Section 307-4.6	7	EA	_____ _____		
12.	Install Stamped Colored Concrete per Section 303-6	50	SF	_____ _____		
13.	Install Driveway per drawing 102 case 3101	200	SF	_____ _____		
14.	Striping per Section 310	1	LS			

Item No.	Description	Estimated Quantity (A)	Unit of Measure	Item UNIT Price (in Words)	Item UNIT Price (in Figures) (B)	TOTAL PRICE (in Figures) (AxB)
15.	Furnish and Install AC pavement at RR panels per Section 302-5	60	TON	_____ _____		
16.	Remove and Salvage Pole Mounted Head per 307-4.6	8	EA	_____ _____		
17.	Furnish and Install Pedestrian Head per 307-4.6	4	EA	_____ _____		
18.	Furnish and Install Pullbox – No.5 per 307-2.4	2	EA	_____ _____		
19.	Furnish and Install Conductors/DLC Cable per 307-2.6	1730	LF	_____ _____		
20.	Furnish and Install Vehicle Head - 12" Sections with Backplate per 307-4.6	6	EA	_____ _____		
21.	Remove (E) Pedestrian Push Button from Pole to Remain per Section 307-1.5	3	EA	_____ _____		
22.	Remove 4' Pedestrian Push Button Pole and Push Button	2	EA	_____ _____		
23.	Furnish and Install 1B Pole per Drawing 500A and 500B Case 3101	1	EA	_____ _____		
24.	Fog Seal per Section 302-12	1	LS	_____ _____		
25.	Furnish and Install Pedestrian Barricade per Caltrans detail ES-7Q Type 1	2	EA	_____ _____		
26.	Furnish and Install Street Light Pole – 15TS and LED Street Light per Drawing 500A and 500B Case 3101	1	EA	_____ _____		
27.	Furnish and Install Pedestrian Fence and Gates Per Addendum 1	4	EA			

TOTAL BID: _____
(In Words)

TOTAL BID: _____
(In Figures)

UNITS OF MEASURE:

Abbreviation	Word or Words
LF	Linear Feet
SF	Square Feet
SY	Square Yards
CY	Cubic Yards
TN	Tons (2,000 lbs./907.2 kgs.)
LS	Lump Sum
EA	Each
MO	Months

NOTE: The estimate of construction quantities set forth herein is approximate only, being given as a basis for the comparison of bids. The City does not expressly nor by implication agree that the actual amount of work will correspond therewith, and reserves the right to change the amount of any class or portion of the work or to omit portions of the work as may be deemed necessary or expedient by the Engineer in accordance with section 3-2.1.1 of the Special Provisions. All bids will be compared on the basis of the Engineer's Estimate of the quantities of the work to be done. The undersigned declares, by signing this proposal, that the bidder has carefully checked all of the above figures and understands that the City shall not be responsible for any errors or omissions on the part of the undersigned in making up this bid.

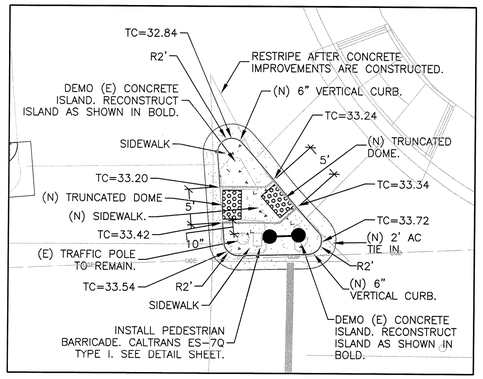

2 PORK CHOP ISLAND DETAIL
1"=10'

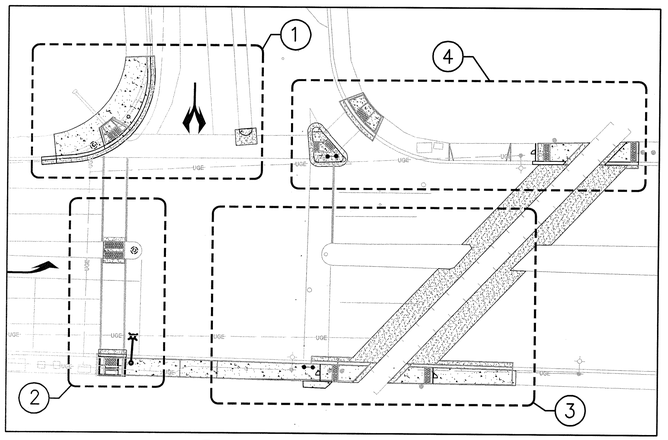

3 CONCRETE & SIGNAL WORK PHASING PLAN
1"=30'

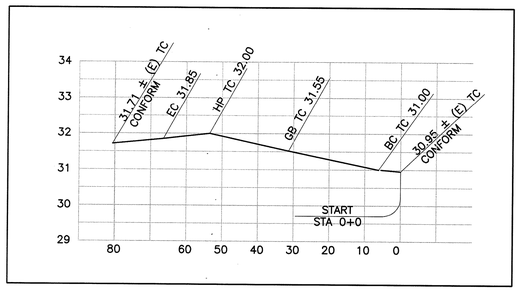

4 CURB PROFILE – SW CORNER (TRUE LENGTH)
1"=20' HORIZ
1"=2' VERT

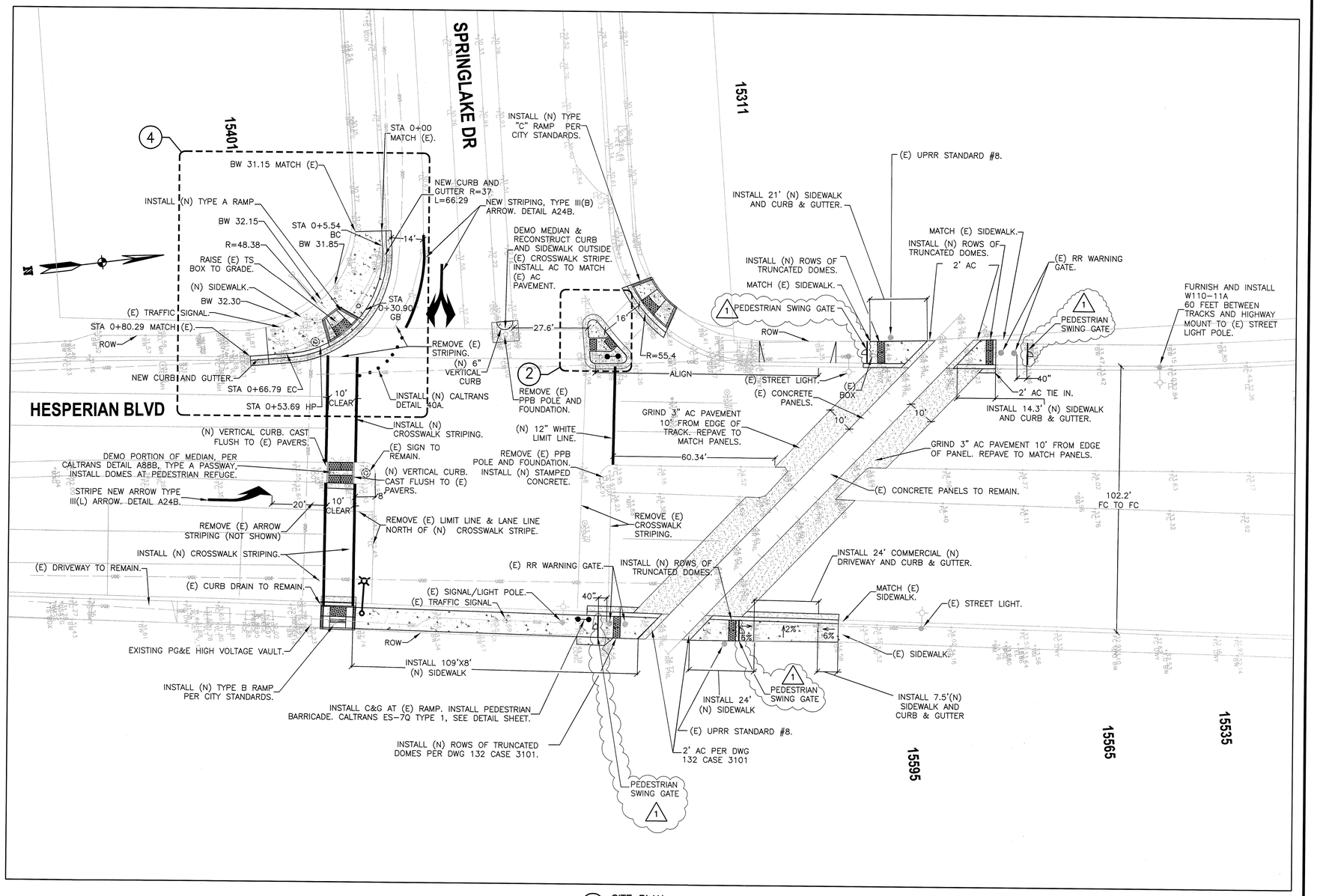

1 SITE PLAN
Scale: 1"=20'

NOTES:

1. UNDERGROUND ELECTRIC LINES (UGE) ARE SHOWN ON THE PLANS. THERE ARE OTHER UNDERGROUND UTILITIES PRESENT. PLANS CAN BE FOUND IN THE OFFICE OF THE ENGINEER.

LEGEND:

= CONCRETE (N)

= ASPHALT CONCRETE (N)

REGISTERED PROFESSIONAL ENGINEER KENNETH C. JOSEPH No. 34870 Exp. 9-30-16 CIVIL STATE OF CALIFORNIA

CITY OF SAN LEANDRO INCORPORATED 1872

BEFORE YOU DIG, CALL UNDERGROUND SERVICE ALERT 811

IT SHALL BE THE CONTRACTOR'S RESPONSIBILITY TO DETERMINE THE EXISTENCE AND LOCATION OF ALL UNDERGROUND UTILITIES. THOSE SHOWN REPRESENT THE BEST INFORMATION AVAILABLE TO THE CITY OF SAN LEANDRO AT THE TIME OF PREPARATION OF THESE PLANS. NO GUARANTEE IS MADE AS TO THE ACCURACY OF THIS INFORMATION.

NO.	DATE	REVISION
1	6/2/14	ADDENDUM 1

CITY OF SAN LEANDRO

DESIGNED BY	NNC	DATE 5/14/2014
DRAWN BY	AMS	DATE 5/14/2014
PROJECT MGR.		DATE 6/5/2014
TRANS ADMIN.		DATE 6/5/2014
SENIOR ENGR.		DATE 6/5/14
APPROVED BY:		DATE 6/5/14

CITY ENGINEER, R.C.E. No. 34870

HESPERIAN BLVD./SPRINGLAKE DR.
RAILROAD CROSSING IMPROVEMENTS

IMPROVEMENT PLANS

AT FULL SIZE THIS LINE MEASURES 1"

SHEET 2 OF 6

JOB NO. 12-150-38-325

SCALE AS NOTED

DWG 3718 CASE 202

ATTACHMENT A

FEDERAL WAGE RATES (INTERNET WEBSITE ADDRESS)

http://www.wdol.gov/dba.aspx

GENERAL DECISION NUMBER: CA140029

CONTRACTOR IS REQUIRED TO REVIEW THE DOCUMENTS AT THE WEBSITE ABOVE, PAY ALL WORKERS THE HIGHER OF THE WAGE LISTED ABOVE OR THE WAGE LISTED IN ATTACHMENT B, AND INCLUDE ALL COSTS OF COMPLIANCE IN HIS BID.

General Decision Number: CA140029 05/30/2014 CA29

Superseded General Decision Number: CA20130029

State: California

Construction Types: Building, Heavy (Heavy and Dredging) and Highway

Counties: Alameda, Calaveras, Contra Costa, Fresno, Kings, Madera, Mariposa, Merced, Monterey, San Benito, San Francisco, San Joaquin, San Mateo, Santa Clara, Santa Cruz, Stanislaus and Tuolumne Counties in California.

BUILDING CONSTRUCTION PROJECTS; DREDGING PROJECTS (does not include hopper dredge work); HEAVY CONSTRUCTION PROJECTS (does not include water well drilling); HIGHWAY CONSTRUCTION PROJECTS

Modification Number	Publication Date
0	01/03/2014
1	01/10/2014
2	01/24/2014
3	01/31/2014
4	03/07/2014
5	04/11/2014
6	04/25/2014
7	05/02/2014
8	05/16/2014
9	05/23/2014
10	05/30/2014

ASBE0016-001 01/01/2014

AREA 1: ALAMEDA, CONTRA COSTA, LAKE, MARIN, MENDOCINO, MONTEREY, NAPA, SAN BENITO, SAN FRANCISCO, SAN MATEO, SANTA CLARA, SANTA CRUZ, SOLANO, & SONOMA COUNTIES

AREA 2: ALPINE, AMADOR, BUTTE, CALAVERAS, COLUSA, DEL NORTE, EL DORADO, FRESNO, GLENN, HUMBOLDT, KINGS, LASSEN, MADERA, MARIPOSA, MERCED, MODOC, MONO, NEVADA, PLACER, PLUMAS, SACRAMENTO, SAN JOAQUIN, SHASTA, SIERRA, SISKIYOU, STANISLAU, SUTTER, TEHEMA, TRINITY, TULARE, TUOLUMNE, YOLO, & YUBA COUNTIES

	Rates	Fringes
Asbestos Workers/Insulator (Includes the application of all insulating materials, Protective Coverings, Coatings, and Finishes to all types of mechanical systems)		
Area 1	$ 57.15	18.72
Area 2	$ 44.05	18.62

ASBE0016-004 01/01/2013

	Rates	Fringes
Asbestos Removal worker/hazardous material handler (Includes preparation, wetting, stripping, removal, scrapping, vacuuming, bagging and disposing of all insulation materials from mechanical systems, whether they contain asbestos or not)	$ 31.13	6.95

BOIL0549-001 01/01/2013

AREA 1: ALAMEDA, CONTRA COSTA, SAN FRANCISCO, SAN MATEO & SANTA CLARA COUNTIES

AREA 2: REMAINING COUNTIES

	Rates	Fringes
BOILERMAKER		
Area 1	$ 42.06	33.43
Area 2	$ 38.37	31.32

BRCA0003-001 06/01/2011

	Rates	Fringes
MARBLE FINISHER	$ 28.02	12.22

BRCA0003-003 06/01/2011

	Rates	Fringes
MARBLE MASON	$ 39.22	18.68

BRCA0003-005 05/01/2013

	Rates	Fringes
BRICKLAYER		
(1) Fresno, Kings, Madera, Mariposa, Merced	$ 35.41	19.92
(7) San Francisco, San Mateo	$ 39.96	23.79
(8) Alameda, Contra Costa, San Benito, Santa Clara	$ 40.98	20.49
(9) Calaveras, San Joaquin, Stanislaus, Toulumne	$ 36.48	19.59
(16) Monterey, Santa Cruz	$ 37.80	22.46

BRCA0003-008 07/01/2013

	Rates	Fringes
TERRAZZO FINISHER	$ 33.15	13.93
TERRAZZO WORKER/SETTER	$ 39.95	24.39

BRCA0003-011 04/01/2013

AREA 1: Alameda, Contra Costa, Monterey, San Benito, San Francisco, San Mateo, Santa Clara, Santa Cruz

AREA 2: Calaveras, San Joaquin, Stanislaus, Tuolumne

AREA 3: Fresno, Kings, Madera, Mariposa, Merced

	Rates	Fringes
TILE FINISHER		
Area 1	$ 22.01	12.35
Area 2	$ 21.26	12.44
Area 3	$ 21.01	11.58
Tile Layer		
Area 1	$ 39.42	13.77
Area 2	$ 34.41	13.68
Area 3	$ 29.78	13.10

CARP0022-001 07/01/2013

San Francisco County

	Rates	Fringes

Carpenters

Bridge Builder/Highway Carpenter	$ 39.35	26.58
Hardwood Floorlayer, Shingler, Power Saw Operator, Steel Scaffold & Steel Shoring Erector, Saw Filer	$ 39.50	26.58
Journeyman Carpenter	$ 39.35	26.58
Millwright	$ 39.45	28.17

CARP0034-001 07/01/2013

	Rates	Fringes
Diver		
Assistant Tender, ROV Tender/Technician	$ 38.60	29.78
Diver standby	$ 43.38	29.78
Diver Tender	$ 42.38	29.78
Diver wet	$ 85.91	29.78
Manifold Operator (mixed gas)	$ 47.38	29.78
Manifold Operator (Standby)	$ 42.38	29.78

DEPTH PAY (Surface Diving):

050 to 100 ft	$2.00 per foot
101 to 150 ft	$3.00 per foot
151 to 220 ft	$4.00 per foot

SATURATION DIVING:
The standby rate shall apply until saturation starts. The saturation diving rate applies when divers are under pressure continuously until work task and decompression are complete. The diver rate shall be paid for all saturation hours.

DIVING IN ENCLOSURES:
Where it is necessary for Divers to enter pipes or tunnels, or other enclosures where there is no vertical ascent, the following premium shall be paid: Distance traveled from entrance 26 feet to 300 feet: $1.00 per foot. When it is necessary for a diver to enter any pipe, tunnel or other enclosure less than 48" in height, the premium will be $1.00 per foot.

WORK IN COMBINATION OF CLASSIFICATIONS:
Employees working in any combination of classifications within the diving crew (except dive supervisor) in a shift are paid in the classification with the highest rate for that shift.

CARP0034-003 07/01/2013

	Rates	Fringes

Piledriver.....$ 38.60 29.78

CARP0035-007 07/01/2013

AREA 1: Alameda, Contra Costa, San Francisco, San Mateo, Santa Clara counties

AREA 2: Monterey, San Benito, Santa Cruz Counties

AREA 3: Calaveras, Fresno, Kings, Madera, Mariposa, Merced, San Joaquin, Stanislaus, Tuolumne Counties

	Rates	Fringes
Modular Furniture Installer		
Area 1		
Installer I	$ 22.96	17.52
Installer II	$ 19.53	17.52
Lead Installer	$ 26.41	18.02
Master Installer	$ 30.63	18.02
Area 2		
Installer I	$ 20.31	17.52
Installer II	$ 17.36	17.52
Lead Installer	$ 23.28	18.02
Master Installer	$ 26.91	18.02
Area 3		
Installer I	$ 19.36	17.52
Installer II	$ 16.59	17.52
Lead Installer	$ 22.16	18.02
Master Installer	$ 25.58	18.02

CARP0035-008 08/01/2013

AREA 1: Alameda, Contra Costa, San Francisco, San Mateo, Santa Clara counties

AREA 2: Monterey, San Benito, Santa Cruz Counties

AREA 3: San Joaquin

AREA 4: Calaveras, Fresno, Kings, Madera, Mariposa, Merced, Stanislaus, Tuolumne Counties

	Rates	Fringes
Drywall Installers/Lathers:		
Area 1	$ 39.35	27.02
Area 2	$ 33.47	27.02
Area 3	$ 33.97	27.02
Area 4	$ 32.62	27.02
Drywall Stocker/Scrapper		
Area 1	$ 19.68	15.65
Area 2	$ 16.74	15.65
Area 3	$ 16.99	15.65
Area 4	$ 16.31	15.65

CARP0152-001 07/01/2013

Contra Costa County

	Rates	Fringes
Carpenters		
Bridge Builder/Highway Carpenter	$ 39.35	26.58
Hardwood Floorlayer, Shingler, Power Saw Operator, Steel Scaffold & Steel Shoring Erector, Saw Filer	$ 39.50	26.58
Journeyman Carpenter	$ 39.35	26.58
Millwright	$ 39.45	28.17

CARP0152-002 07/01/2013

San Joaquin County

	Rates	Fringes
Carpenters		
Bridge Builder/Highway Carpenter	$ 39.35	26.58
Hardwood Floorlayer, Shingler, Power Saw Operator, Steel Scaffold & Steel Shoring Erector, Saw Filer	$ 33.62	26.58
Journeyman Carpenter	$ 33.47	26.58
Millwright	$ 35.97	28.17

CARP0152-004 07/01/2013

Calaveras, Mariposa, Merced, Stanislaus and Tuolumne Counties

	Rates	Fringes
Carpenters		
Bridge Builder/Highway Carpenter	$ 39.35	26.58
Hardwood Floorlayer, Shingler, Power Saw Operator, Steel Scaffold & Steel Shoring Erector, Saw Filer	$ 32.27	26.58
Journeyman Carpenter	$ 32.12	26.58
Millwright	$ 34.62	28.17

CARP0217-001 07/01/2013

San Mateo County

	Rates	Fringes

Carpenters
Bridge Builder/Highway
Carpenter.....$ 39.35 26.58
Hardwood Floorlayer,
Shingler, Power Saw
Operator, Steel Scaffold &
Steel Shoring Erector, Saw
Filer.....$ 39.50 26.58
Journeyman Carpenter.....$ 39.35 26.58
Millwright.....$ 39.45 28.17

CARP0405-001 07/01/2013

Santa Clara County

	Rates	Fringes
Carpenters		
Bridge Builder/Highway Carpenter	$ 39.35	26.58
Hardwood Floorlayer, Shingler, Power Saw Operator, Steel Scaffold & Steel Shoring Erector, Saw Filer	$ 39.50	26.58
Journeyman Carpenter	$ 39.35	26.58
Millwright	$ 39.45	28.17

CARP0405-002 07/01/2013

San Benito County

	Rates	Fringes
Carpenters		
Bridge Builder/Highway Carpenter	$ 39.35	26.58
Hardwood Floorlayer, Shingler, Power Saw Operator, Steel Scaffold & Steel Shoring Erector, Saw Filer	$ 33.62	26.58
Journeyman Carpenter	$ 33.47	26.58
Millwright	$ 35.97	28.17

CARP0505-001 07/01/2013

Santa Cruz County

	Rates	Fringes
Carpenters		
Bridge Builder/Highway Carpenter	$ 39.35	26.58
Hardwood Floorlayer, Shingler, Power Saw		

Operator, Steel Scaffold &
Steel Shoring Erector, Saw
Filer.....$ 33.62 26.58
Journeyman Carpenter.....$ 33.47 26.58
Millwright.....$ 35.97 28.17

CARP0605-001 07/01/2013

Monterey County

	Rates	Fringes
Carpenters		
Bridge Builder/Highway Carpenter	$ 39.35	26.58
Hardwood Floorlayer, Shingler, Power Saw Operator, Steel Scaffold & Steel Shoring Erector, Saw Filer	$ 33.62	26.58
Journeyman Carpenter	$ 33.47	26.58
Millwright	$ 35.97	28.17

CARP0701-001 07/01/2013

Fresno and Madera Counties

	Rates	Fringes
Carpenters		
Bridge Builder/Highway Carpenter	$ 39.35	26.58
Hardwood Floorlayer, Shingler, Power Saw Operator, Steel Scaffold & Steel Shoring Erector, Saw Filer	$ 32.27	26.58
Journeyman Carpenter	$ 32.12	26.58
Millwright	$ 34.62	28.17

CARP0713-001 07/01/2013

Alameda County

	Rates	Fringes
Carpenters		
Bridge Builder/Highway Carpenter	$ 39.35	26.58
Hardwood Floorlayer, Shingler, Power Saw Operator, Steel Scaffold & Steel Shoring Erector, Saw Filer	$ 39.50	26.58
Journeyman Carpenter	$ 39.35	26.58
Millwright	$ 39.45	28.17

CARP1109-001 07/01/2013

Kings County

	Rates	Fringes
Carpenters		
Bridge Builder/Highway Carpenter	$ 39.35	26.58
Hardwood Floorlayer, Shingler, Power Saw Operator, Steel Scaffold & Steel Shoring Erector, Saw Filer	$ 32.27	26.58
Journeyman Carpenter	$ 32.12	26.58
Millwright	$ 34.62	28.17

ELEC0006-004 12/01/2013

SAN FRANCISCO COUNTY

	Rates	Fringes
Sound & Communications		
Installer	$ 31.82	3%+16.11
Technician	$ 36.23	3%+16.11

SCOPE OF WORK: Including any data system whose only function is to transmit or receive information; excluding all other data systems or multiple systems which include control function or power supply; inclusion or exclusion of terminations and testings of conductors determined by their function; excluding fire alarm work when installed in raceways (including wire and cable pulling) and when performed on new or major remodel building projects or jobs for which the conductors for the fire alarm system are installed in conduit; excluding installation of raceway systems, line voltage work, industrial work, life-safety systems (all buildings having floors located more than 75' above the lowest floor level having building access); excluding energy management systems.

FOOTNOTE: Fire alarm work when installed in raceways (including wire and cable pulling), on projects which involve new or major remodel building construction, for which the conductors for the fire alarm system are installed in the conduit, shall be performed by the inside electrician.

ELEC0006-007 06/01/2013

SAN FRANCISCO COUNTY

	Rates	Fringes
ELECTRICIAN	$ 56.92	25.5145

ELEC0006-008 12/01/2011

MARIPOSA, MERCED, STANISLAUS AND TUOLUMNE COUNTIES

	Rates	Fringes
Communications System		
Installer	$ 30.12	3%+13.70
Technician	$ 34.29	3%+13.70

SCOPE OF WORK: Including any data system whose only function is to transmit or receive information; excluding all other data systems or multiple systems which include control function or power supply; inclusion or exclusion of terminations and testings of conductors determined by their function; excluding fire alarm work when installed in raceways (including wire and cable pulling) and when performed on new or major remodel building projects or jobs for which the conductors for the fire alarm system are installed in conduit; excluding installation of raceway systems, line voltage work, industrial work, life-safety systems (all buildings having floors located more than 75' above the lowest floor level having building access); excluding energy management systems.

FOOTNOTE: Fire alarm work when installed in raceways (including wire and cable pulling), on projects which involve new or major remodel building construction, for which the conductors for the fire alarm system are installed in the conduit, shall be performed by the inside electrician.

ELEC0100-002 06/01/2013

FRESNO, KINGS, AND MADERA COUNTIES

	Rates	Fringes
ELECTRICIAN	$ 33.60	19.50

ELEC0100-005 12/01/2013

FRESNO, KINGS, MADERA

	Rates	Fringes
Communications System		
Installer	$ 27.34	16.12
Technician	$ 31.13	16.23

SCOPE OF WORK

Includes the installation testing, service and maintenance, of the following systems which utilize the transmission and/or transference of voice, sound, vision and digital for commercial, education, security and entertainment purposes

for the following: TV monitoring and surveillance, background-foreground music, intercom and telephone interconnect, inventory control systems, microwave transmission, multi-media, multiplex, nurse call system, radio page, school intercom and sound, burglar alarms, and low voltage master clock systems.

A. SOUND AND VOICE TRANSMISSION/TRANSFERENCE SYSTEMS Background foreground music, Intercom and telephone interconnect systems, Telephone systems Nurse call systems, Radio page systems, School intercom and sound systems, Burglar alarm systems, Low voltage, master clock systems, Multi-media/multiplex systems, Sound and musical entertainment systems, RF systems, Antennas and Wave Guide,

B. FIRE ALARM SYSTEMS Installation, wire pulling and testing

C. TELEVISION AND VIDEO SYSTEMS Television monitoring and surveillance systems Video security systems, Video entertainment systems, Video educational systems, Microwave transmission systems, CATV and CCTV

D. SECURITY SYSTEMS Perimeter security systems Vibration sensor systems Card access systems Access control systems, Sonar/infrared monitoring equipment

E. COMMUNICATIONS SYSTEMS THAT TRANSMIT OR RECEIVE INFORMATION AND/OR CONTROL SYSTEMS THAT ARE INTRINSIC TO THE ABOVE LISTED SYSTEMS SCADA (Supervisory Control and Data Acquisition) PCM (Pulse Code Modulation) Inventory Control Systems, Digital Data Systems Broadband and Baseband and Carriers Point of Sale Systems, VSAT Data Systems Data Communication Systems RF and Remote Control Systems, Fiber Optic Data Systems

WORK EXCLUDED Raceway systems are not covered (excluding Ladder-Rack for the purpose of the above listed systems). Chases and/or nipples (not to exceed 10 feet) may be installed on open wiring systems. Energy management systems. SCADA (Supervisory Control and Data Acquisition) when not intrinsic to the above listed systems (in the scope). Fire alarm systems when installed in raceways (including wire and cable pulling) shall be performed at the electrician wage rate, when either of the following two (2) conditions apply:
1. The project involves new or major remodel building trades construction.
2. The conductors for the fire alarm system are installed in conduit.

ELEC0234-001 03/24/2014

MONTEREY, SAN BENITO AND SANTA CRUZ COUNTIES

	Rates	Fringes

ELECTRICIAN
Zone A.....$ 41.65 22.60
Zone B.....$ 45.82 22.72

Zone A: All of Santa Cruz, Monterey, and San Benito Counties within 25 air miles of Highway 1 and Dolan Road in Moss Landing, and an area extending 5 miles east and west of Highway 101 South to the San Luis Obispo County Line

Zone B: Any area outside of Zone A

ELEC0234-003 12/01/2013

MONTEREY, SAN BENITO, AND SANTA CRUZ COUNTIES

	Rates	Fringes
Sound & Communications		
Installer	$ 31.32	16.24
Technician	$ 35.66	16.24

SCOPE OF WORK: Including any data system whose only function is to transmit or receive information; excluding all other data systems or multiple systems which include control function or power supply; inclusion or exclusion of terminations and testings of conductors determined by their function; excluding fire alarm work when installed in raceways (including wire and cable pulling) and when performed on new or major remodel building projects or jobs for which the conductors for the fire alarm system are installed in conduit; excluding installation of raceway systems, line voltage work, industrial work, life-safety systems (all buildings having floors located more than 75' above the lowest floor level having building access); excluding energy management systems.

FOOTNOTE: Fire alarm work when installed in raceways (including wire and cable pulling), on projects which involve new or major remodel building construction, for which the conductors for the fire alarm system are installed in the conduit, shall be performed by the inside electrician.

ELEC0302-001 06/03/2013

CONTRA COSTA COUNTY

	Rates	Fringes
CABLE SPLICER	$ 51.67	25.70
ELECTRICIAN	$ 45.26	25.51

ELEC0302-003 12/01/2013

CONTRA COSTA COUNTY

	Rates	Fringes
Sound & Communications		
Installer	$ 31.32	16.24
Technician	$ 35.66	16.37

SCOPE OF WORK: Including any data system whose only function is to transmit or receive information; excluding all other data systems or multiple systems which include control function or power supply; inclusion or exclusion of terminations and testings of conductors determined by their function; excluding fire alarm work when installed in raceways (including wire and cable pulling) and when performed on new or major remodel building projects or jobs for which the conductors for the fire alarm system are installed in conduit; excluding installation of raceway systems, line voltage work, industrial work, life-safety systems (all buildings having floors located more than 75' above the lowest floor level having building access); excluding energy management systems.

FOOTNOTE: Fire alarm work when installed in raceways (including wire and cable pulling), on projects which involve new or major remodel building construction, for which the conductors for the fire alarm system are installed in the conduit, shall be performed by the inside electrician.

ELEC0332-001 12/01/2013

SANTA CLARA COUNTY

	Rates	Fringes
CABLE SPLICER	$ 60.46	30.844
ELECTRICIAN	$ 52.57	30.607

FOOTNOTES: Work under compressed air or where gas masks are required, orwork on ladders, scaffolds, stacks, "Bosun's chairs," or other structures and where the workers are not protected by permanent guard rails at a distance of 40 to 60 ft. from the ground or supporting structures: to be paid one and one-half times the straight-time rate of pay. Work on structures of 60 ft. or over (as described above): to be paid twice the straight-time rate of pay.

ELEC0332-003 12/01/2013

SANTA CLARA COUNTY

	Rates	Fringes
Sound & Communications		
Installer	$ 31.32	16.24

Technician.....$ 35.66 16.37

SCOPE OF WORK: Including any data system whose only function is to transmit or receive information; excluding all other data systems or multiple systems which include control function or power supply; inclusion or exclusion of terminations and testings of conductors determined by their function; excluding fire alarm work when installed in raceways (including wire and cable pulling) and when performed on new or major remodel building projects or jobs for which the conductors for the fire alarm system are installed in conduit; excluding installation of raceway systems, line voltage work, industrial work, life-safety systems (all buildings having floors located more than 75' above the lowest floor level having building access); excluding energy management systems.

FOOTNOTE: Fire alarm work when installed in raceways (including wire and cable pulling), on projects which involve new or major remodel building construction, for which the conductors for the fire alarm system are installed in the conduit, shall be performed by the inside electrician.

ELEC0595-001 06/01/2013

ALAMEDA COUNTY

	Rates	Fringes
CABLE SPLICER	$ 53.04	3%+28.77
ELECTRICIAN	$ 47.15	3%+28.77

ELEC0595-002 06/01/2013

CALAVERAS AND SAN JOAQUIN COUNTIES

	Rates	Fringes
CABLE SPLICER	$ 38.25	9.025%+21.74
ELECTRICIAN		
(1) Tunnel work	$ 35.70	9.025%+21.74
(2) All other work	$ 34.00	9.025%+21.74

ELEC0595-006 12/01/2013

ALAMEDA COUNTY

	Rates	Fringes
Sound & Communications		
Installer	$ 31.32	3%+15.30
Technician	$ 35.66	3%+15.30

SCOPE OF WORK: Including any data system whose only function is to transmit or receive information; excluding all other

data systems or multiple systems which include control function or power supply; inclusion or exclusion of terminations and testings of conductors determined by their function; excluding fire alarm work when installed in raceways (including wire and cable pulling) and when performed on new or major remodel building projects or jobs for which the conductors for the fire alarm system are installed in conduit; excluding installation of raceway systems, line voltage work, industrial work, life-safety systems (all buildings having floors located more than 75' above the lowest floor level having building access); excluding energy management systems.

FOOTNOTE: Fire alarm work when installed in raceways (including wire and cable pulling), on projects which involve new or major remodel building construction, for which the conductors for the fire alarm system are installed in the conduit, shall be performed by the inside electrician.

ELEC0595-008 12/01/2013

CALAVERAS AND SAN JOAQUIN COUNTIES

	Rates	Fringes
Communications System		
Installer	$ 27.34	3%+15.30
Technician	$ 31.12	3%+15.30

SCOPE OF WORK: Including any data system whose only function is to transmit or receive information; excluding all other data systems or multiple systems which include control function or power supply; inclusion or exclusion of terminations and testings of conductors determined by their function; excluding fire alarm work when installed in raceways (including wire and cable pulling) and when performed on new or major remodel building projects or jobs for which the conductors for the fire alarm system are installed in conduit; excluding installation of raceway systems, line voltage work, industrial work, life-safety systems (all buildings having floors located more than 75' above the lowest floor level having building access); excluding energy management systems.

FOOTNOTE: Fire alarm work when installed in raceways (including wire and cable pulling), on projects which involve new or major remodel building construction, for which the conductors for the fire alarm system are installed in the conduit, shall be performed by the inside electrician.

ELEC0617-001 06/01/2013

SAN MATEO COUNTY

	Rates	Fringes
ELECTRICIAN.....	$ 52.00	26.24

ELEC0617-003 12/01/2013

SAN MATEO COUNTY

	Rates	Fringes
Sound & Communications		
Installer.....	$ 31.32	16.24
Technician.....	$ 35.66	16.37

SCOPE OF WORK: Including any data system whose only function is to transmit or receive information; excluding all other data systems or multiple systems which include control function or power supply; inclusion or exclusion of terminations and testings of conductors determined by their function; excluding fire alarm work when installed in raceways (including wire and cable pulling) and when performed on new or major remodel building projects or jobs for which the conductors for the fire alarm system are installed in conduit; excluding installation of raceway systems, line voltage work, industrial work, life-safety systems (all buildings having floors located more than 75' above the lowest floor level having building access); excluding energy management systems.

FOOTNOTE: Fire alarm work when installed in raceways (including wire and cable pulling), on projects which involve new or major remodel building construction, for which the conductors for the fire alarm system are installed in the conduit, shall be performed by the inside electrician.

ELEC0684-001 01/01/2014

MARIPOSA, MERCED, STANISLAUS AND TUOLUMNE COUNTIES

	Rates	Fringes
ELECTRICIAN.....	$ 34.90	3%+18.22

CABLE SPLICER = 110% of Journeyman Electrician

ELEC1245-001 06/01/2013

	Rates	Fringes
LINE CONSTRUCTION		
(1) Lineman; Cable splicer..	$ 50.30	15.00
(2) Equipment specialist (operates crawler tractors, commercial motor		

vehicles, backhoes,
trenchers, cranes (50 tons
and below), overhead &
underground distribution
line equipment).....$ 40.17 14.56
(3) Groundman.....$ 30.73 13.48
(4) Powderman.....$ 44.91 13.48

HOLIDAYS: New Year's Day, M.L. King Day, Memorial Day, Independence Day, Labor Day, Veterans Day, Thanksgiving Day and day after Thanksgiving, Christmas Day

---

ELEV0008-001 01/01/2014

	Rates	Fringes
ELEVATOR MECHANIC.....	$ 59.19	26.785

FOOTNOTE:
PAID VACATION: Employer contributes 8% of regular hourly rate as vacation pay credit for employees with more than 5 years of service, and 6% for 6 months to 5 years of service.
PAID HOLIDAYS: New Years Day, Memorial Day, Independence Day, Labor Day, Veterans Day, Thanksgiving Day, Friday after Thanksgiving, and Christmas Day.

ENGI0003-008 07/01/2013

	Rates	Fringes
Dredging: (DREDGING: CLAMSHELL & DIPPER DREDGING; HYDRAULIC SUCTION DREDGING:)		
AREA 1:		
(1) Leverman.....	$ 40.53	27.81
(2) Dredge Dozer; Heavy duty repairman.....	$ 35.57	27.81
(3) Booster Pump Operator; Deck Engineer; Deck mate; Dredge Tender; Winch Operator.....	$ 34.45	27.81
(4) Bargeman; Deckhand; Fireman; Leveehand; Oiler..	$ 31.15	27.81
AREA 2:		
(1) Leverman.....	$ 42.53	27.81
(2) Dredge Dozer; Heavy duty repairman.....	$ 37.57	27.81
(3) Booster Pump Operator; Deck Engineer; Deck mate; Dredge Tender; Winch Operator.....	$ 36.45	27.81
(4) Bargeman; Deckhand; Fireman; Leveehand; Oiler..	$ 33.15	27.81

AREA DESCRIPTIONS

AREA 1: ALAMEDA,BUTTE, CONTRA COSTA, KINGS, MARIN, MERCED, NAPA, SACRAMENTO, SAN BENITO, SAN FRANCISCO, SAN JOAQUIN, SAN MATEO, SANTA CLARA, SANTA CRUZ, SOLANO, STANISLAUS, SUTTER, YOLO, AND YUBA COUNTIES

AREA 2: MODOC COUNTY

THE REMAINGING COUNTIES ARE SPLIT BETWEEN AREA 1 AND AREA 2 AS NOTED BELOW:

ALPINE COUNTY:
Area 1: Northernmost part
Area 2: Remainder

CALAVERAS COUNTY:
Area 1: Remainder
Area 2: Eastern part

COLUSA COUNTY:
Area 1: Eastern part
Area 2: Remainder

ELDORADO COUNTY:
Area 1: North Central part
Area 2: Remainder

FRESNO COUNTY:
Area 1: Remainder
Area 2: Eastern part

GLENN COUNTY:
Area 1: Eastern part
Area 2: Remainder

LASSEN COUNTY:
Area 1: Western part along the Southern portion of border with Shasta County
Area 2: Remainder

MADERA COUNTY:
Area 1: Except Eastern part
Area 2: Eastern part

MARIPOSA COUNTY
Area 1: Except Eastern part
Area 2: Eastern part

MONTERREY COUNTY
Area 1: Except Southwestern part
Area 2: Southwestern part

NEVADA COUNTY:
Area 1: All but the Northern portion along the border of Sierra County

Area 2: Remainder

PLACER COUNTY:
Area 1: Al but the Central portion
Area 2: Remainder

PLUMAS COUNTY:
Area 1: Western portion
Area 2: Remainder

SHASTA COUNTY:
Area 1: All but the Northeastern corner
Area 2: Remainder

SIERRA COUNTY:
Area 1: Western part
Area 2: Remainder

SISKIYOU COUNTY:
Area 1: Central part
Area 2: Remainder

SONOMA COUNTY:
Area 1: All but the Northwestern corner
Area 2: Remainder

TEHAMA COUNTY:
  Area 1: All but the Western border with Mendocino & Trinity
  Counties
Area 2: Remainder

TRINITY COUNTY:
  Area 1: East Central part and the Northeastern border with
  Shasta County
Area 2: Remainder

TUOLUMNE COUNTY:
Area 1: Except Eastern part
Area 2: Eastern part

 ENGI0003-018 07/01/2013

"AREA 1" WAGE RATES ARE LISTED BELOW

"AREA 2" RECEIVES AN ADDITIONAL $2.00 PER HOUR ABOVE AREA 1
RATES.

SEE AREA DEFINITIONS BELOW

	Rates	Fringes
OPERATOR: Power Equipment		
(AREA 1:)		
GROUP 1	$ 39.02	26.27
GROUP 2	$ 37.49	26.27

GROUP 3.....$ 36.01 26.27
GROUP 4.....$ 34.63 26.27
GROUP 5.....$ 33.36 26.27
GROUP 6.....$ 32.04 26.27
GROUP 7.....$ 30.90 26.27
GROUP 8.....$ 29.76 26.27
GROUP 8-A.....$ 27.55 26.27

OPERATOR: Power Equipment
(Cranes and Attachments -
AREA 1:)

GROUP 1
Cranes.....$ 39.90 26.27
Oiler.....$ 32.93 26.27
Truck crane oiler.....$ 36.50 26.27

GROUP 2
Cranes.....$ 32.67 26.27
Oiler.....$ 32.67 26.27
Truck crane oiler.....$ 36.21 26.27

GROUP 3
Cranes.....$ 36.40 26.27
Hydraulic.....$ 32.04 26.27
Oiler.....$ 32.43 26.27
Truck Crane Oiler.....$ 35.94 26.27

OPERATOR: Power Equipment
(Piledriving - AREA 1:)

GROUP 1
Lifting devices.....$ 40.24 26.27
Oiler.....$ 30.98 26.27
Truck crane oiler.....$ 33.26 26.27

GROUP 2
Lifting devices.....$ 38.42 26.27
Oiler.....$ 30.71 26.27
Truck Crane Oiler.....$ 33.01 26.27

GROUP 3
Lifting devices.....$ 36.74 26.27
Oiler.....$ 30.49 26.27
Truck Crane Oiler.....$ 32.72 26.27

GROUP 4
Lifting devices.....$ 34.97 26.27

GROUP 5
Lifting devices.....$ 33.67 26.27

GROUP 6
Lifting devices.....$ 32.33 26.27

OPERATOR: Power Equipment
(Steel Erection - AREA 1:)

GROUP 1
Cranes.....$ 40.87 26.27
Oiler.....$ 31.32 26.27
Truck Crane Oiler.....$ 33.55 26.27

GROUP 2
Cranes.....$ 39.10 26.27
Oiler.....$ 31.05 26.27
Truck Crane Oiler.....$ 33.33 26.27

GROUP 3
Cranes.....$ 37.62 26.27
Hydraulic.....$ 32.67 26.27
Oiler.....$ 30.83 26.27

Truck Crane Oiler	$ 33.06	26.27
GROUP 4		
Cranes	$ 35.60	26.27
GROUP 5		
Cranes	$ 34.30	26.27
OPERATOR: Power Equipment (Tunnel and Underground Work - AREA 1:)		
SHAFTS, STOPES, RAISES:		
GROUP 1	$ 35.12	26.27
GROUP 1-A	$ 37.59	26.27
GROUP 2	$ 33.86	26.27
GROUP 3	$ 32.53	26.27
GROUP 4	$ 31.39	26.27
GROUP 5	$ 30.25	26.27
UNDERGROUND:		
GROUP 1	$ 35.02	26.27
GROUP 1-A	$ 37.49	26.27
GROUP 2	$ 33.76	26.27
GROUP 3	$ 32.43	26.27
GROUP 4	$ 31.29	26.27
GROUP 5	$ 30.15	26.27

FOOTNOTE: Work suspended by ropes or cables, or work on a Yo-Yo Cat: $.60 per hour additional.

POWER EQUIPMENT OPERATOR CLASSIFICATIONS

GROUP 1: Operator of helicopter (when used in erection work); Hydraulic excavator, 7 cu. yds. and over; Power shovels, over 7 cu. yds.

GROUP 2: Highline cableway; Hydraulic excavator, 3-1/2 cu. yds. up to 7 cu. yds.; Licensed construction work boat operator, on site; Power blade operator (finish); Power shovels, over 1 cu. yd. up to and including 7 cu. yds. m.r.c.

GROUP 3: Asphalt milling machine; Cable backhoe; Combination backhoe and loader over 3/4 cu. yds.; Continuous flight tie back machine assistant to engineer or mechanic; Crane mounted continuous flight tie back machine, tonnage to apply; Crane mounted drill attachment, tonnage to apply; Dozer, slope brd; Gradall; Hydraulic excavator, up to 3 1/2 cu. yds.; Loader 4 cu. yds. and over; Long reach excavator; Multiple engine scraper (when used as push pull); Power shovels, up to and including 1 cu. yd.; Pre-stress wire wrapping machine; Side boom cat, 572 or larger; Track loader 4 cu. yds. and over; Wheel excavator (up to and including 750 cu. yds. per hour)

GROUP 4: Asphalt plant engineer/box person; Chicago boom; Combination backhoe and loader up to and including 3/4 cu. yd.; Concrete batch plant (wet or dry); Dozer and/or push cat; Pull- type elevating loader; Gradesetter, grade checker (GPS, mechanical or otherwise); Grooving and

grinding machine; Heading shield operator; Heavy-duty drilling equipment, Hughes, LDH, Watson 3000 or similar; Heavy-duty repairperson and/or welder; Lime spreader; Loader under 4 cu. yds.; Lubrication and service engineer (mobile and grease rack); Mechanical finishers or spreader machine (asphalt, Barber-Greene and similar); Miller Formless M-9000 slope paver or similar; Portable crushing and screening plants; Power blade support; Roller operator, asphalt; Rubber-tired scraper, self-loading (paddle-wheels, etc.); Rubber- tired earthmoving equipment (scrapers); Slip form paver (concrete); Small tractor with drag; Soil stabilizer (P & H or equal); Spider plow and spider puller; Tubex pile rig; Unlicensed constuction work boat operator, on site; Timber skidder; Track loader up to 4 yds.; Tractor-drawn scraper; Tractor, compressor drill combination; Welder; Woods-Mixer (and other similar Pugmill equipment)

GROUP 5: Cast-in-place pipe laying machine; Combination slusher and motor operator; Concrete conveyor or concrete pump, truck or equipment mounted; Concrete conveyor, building site; Concrete pump or pumpcrete gun; Drilling equipment, Watson 2000, Texoma 700 or similar; Drilling and boring machinery, horizontal (not to apply to waterliners, wagon drills or jackhammers); Concrete mixer/all; Person and/or material hoist; Mechanical finishers (concrete) (Clary, Johnson, Bidwell Bridge Deck or similar types); Mechanical burm, curb and/or curb and gutter machine, concrete or asphalt); Mine or shaft hoist; Portable crusher; Power jumbo operator (setting slip-forms, etc., in tunnels); Screed (automatic or manual); Self-propelled compactor with dozer; Tractor with boom D6 or smaller; Trenching machine, maximum digging capacity over 5 ft. depth; Vermeer T-600B rock cutter or similar

GROUP 6: Armor-Coater (or similar); Ballast jack tamper; Boom- type backfilling machine; Assistant plant engineer; Bridge and/or gantry crane; Chemical grouting machine, truck-mounted; Chip spreading machine operator; Concrete saw (self-propelled unit on streets, highways, airports and canals); Deck engineer; Drilling equipment Texoma 600, Hughes 200 Series or similar up to and including 30 ft. m.r.c.; Drill doctor; Helicopter radio operator; Hydro-hammer or similar; Line master; Skidsteer loader, Bobcat larger than 743 series or similar (with attachments); Locomotive; Lull hi-lift or similar; Oiler, truck mounted equipment; Pavement breaker, truck-mounted, with compressor combination; Paving fabric installation and/or laying machine; Pipe bending machine (pipelines only); Pipe wrapping machine (tractor propelled and supported); Screed (except asphaltic concrete paving); Self- propelled pipeline wrapping machine; Tractor; Self-loading chipper; Concrete barrier moving machine

GROUP 7: Ballast regulator; Boom truck or dual-purpose A-frame truck, non-rotating - under 15 tons; Truck-mounted rotating telescopic boom type lifting device, Manitex or

similar (boom truck) - under 15 tons; Cary lift or similar; Combination slurry mixer and/or cleaner; Drilling equipment, 20 ft. and under m.r.c.; Firetender (hot plant); Grouting machine operator; Highline cableway signalperson; Stationary belt loader (Kolman or similar); Lift slab machine (Vagtborg and similar types); Maginnes internal full slab vibrator; Material hoist (1 drum); Mechanical trench shield; Pavement breaker with or without compressor combination); Pipe cleaning machine (tractor propelled and supported); Post driver; Roller (except asphalt); Chip Seal; Self-propelled automatically applied concrete curing mahcine (on streets, highways, airports and canals); Self-propelled compactor (without dozer); Signalperson; Slip-form pumps (lifting device for concrete forms); Tie spacer; Tower mobile; Trenching machine, maximum digging capacity up to and including 5 ft. depth; Truck- type loader

GROUP 8: Bit sharpener; Boiler tender; Box operator; Brakeperson; Combination mixer and compressor (shotcrete/gunite); Compressor operator; Deckhand; Fire tender; Forklift (under 20 ft.); Generator; Gunite/shotcrete equipment operator; Hydraulic monitor; Ken seal machine (or similar); Mixermobile; Oiler; Pump operator; Refrigeration plant; Reservoir-debris tug (self-propelled floating); Ross Carrier (construction site); Rotomist operator; Self-propelled tape machine; Shuttlecar; Self-propelled power sweeper operator (includes vacuum sweeper); Slusher operator; Surface heater; Switchperson; Tar pot firetender; Tugger hoist, single drum; Vacuum cooling plant; Welding machine (powered other than by electricity)

GROUP 8-A: Elevator operator; Skidsteer loader-Bobcat 743 series or smaller, and similar (without attachments); Mini excavator under 25 H.P. (backhoe-trencher); Tub grinder wood chipper

---

ALL CRANES AND ATTACHMENTS

GROUP 1: Clamshell and dragline over 7 cu. yds.; Crane, over 100 tons; Derrick, over 100 tons; Derrick barge pedestal-mounted, over 100 tons; Self-propelled boom-type lifting device, over 100 tons

GROUP 2: Clamshell and dragline over 1 cu. yd. up to and including 7 cu. yds.; Crane, over 45 tons up to and including 100 tons; Derrick barge, 100 tons and under; Self-propelled boom-type lifting device, over 45 tons; Tower crane

GROUP 3: Clamshell and dragline up to and including 1 cu. yd.; Cranes 45 tons and under; Self-propelled boom-type lifting device 45 tons and under; Boom Truck or dual purpose A-frame truck, non-rotating over 15 tons; Truck-mounted rotating telescopic boom type lifting device,

Manitex or similar (boom truck) over 15 tons;

PILEDRIVERS

GROUP 1: Derrick barge pedestal mounted over 100 tons; Clamshell over 7 cu. yds.; Self-propelled boom-type lifting device over 100 tons; Truck crane or crawler, land or barge mounted over 100 tons

GROUP 2: Derrick barge pedestal mounted 45 tons to and including 100 tons; Clamshell up to and including 7 cu. yds.; Self-propelled boom-type lifting device over 45 tons; Truck crane or crawler, land or barge mounted, over 45 tons up to and including 100 tons; Fundex F-12 hydraulic pile rig

GROUP 3: Derrick barge pedestal mounted under 45 tons; Self-propelled boom-type lifting device 45 tons and under; Skid/scow piledriver, any tonnage; Truck crane or crawler, land or barge mounted 45 tons and under

GROUP 4: Assistant operator in lieu of assistant to engineer; Forklift, 10 tons and over; Heavy-duty repairperson/welder

GROUP 5: Deck engineer

GROUP 6: Deckhand; Fire tender

STEEL ERECTORS

GROUP 1: Crane over 100 tons; Derrick over 100 tons; Self-propelled boom-type lifting device over 100 tons

GROUP 2: Crane over 45 tons to 100 tons; Derrick under 100 tons; Self-propelled boom-type lifting device over 45 tons to 100 tons; Tower crane

GROUP 3: Crane, 45 tons and under; Self-propelled boom-type lifting device, 45 tons and under

GROUP 4: Chicago boom; Forklift, 10 tons and over; Heavy-duty repair person/welder

GROUP 5: Boom cat

TUNNEL AND UNDERGROUND WORK

GROUP 1-A: Tunnel bore machine operator, 20' diameter or more

GROUP 1: Heading shield operator; Heavy-duty repairperson;

Mucking machine (rubber tired, rail or track type); Raised bore operator (tunnels); Tunnel mole bore operator

GROUP 2: Combination slusher and motor operator; Concrete pump or pumpcrete gun; Power jumbo operator

GROUP 3: Drill doctor; Mine or shaft hoist

GROUP 4: Combination slurry mixer cleaner; Grouting Machine operator; Motorman

GROUP 5: Bit Sharpener; Brakeman; Combination mixer and compressor (gunite); Compressor operator; Oiler; Pump operator; Slusher operator

---

AREA DESCRIPTIONS:

POWER EQUIPMENT OPERATORS, CRANES AND ATTACHMENTS,TUNNEL AND UNDERGROUND [These areas do not apply to Piledrivers and Steel Erectors]

AREA 1: ALAMEDA, BUTTE, CONTRA COSTA, KINGS, MARIN, MERCED, NAPA, SACRAMENTO, SAN BENITO, SAN FRANCISCO, SAN JOAQUIN, SAN MATEO, SANTA CLARA, SANTA CRUZ, SOLANO, STANISLAUS, SUTTER, YOLO, AND YUBA COUNTIES

AREA 2 - MODOC COUNTY

THE REMAINING COUNTIES ARE SPLIT BETWEEN AREA 1 AND AREA 2 AS NOTED BELOW:

ALPINE COUNTY:
Area 1: Northernmost part
Area 2: Remainder

CALAVERAS COUNTY:
Area 1: Except Eastern part
Area 2: Eastern part

COLUSA COUNTY:
Area 1: Eastern part
Area 2: Remainder

DEL NORTE COUNTY:
Area 1: Extreme Southwestern corner
Area 2: Remainder

ELDORADO COUNTY:
Area 1: North Central part
Area 2: Remainder

FRESNO COUNTY
Area 1: Except Eastern part
Area 2: Eastern part

GLENN COUNTY:

Area 1: Eastern part
Area 2: Remainder

HUMBOLDT COUNTY:
Area 1: Except Eastern and Southwestern parts
Area 2: Remainder

LAKE COUNTY:
Area 1: Southern part
Area 2: Remainder

LASSEN COUNTY:
Area 1: Western part along the Southern portion of border with Shasta County
Area 2: Remainder

MADERA COUNTY
Area 1: Remainder
Area 2: Eastern part

MARIPOSA COUNTY
Area 1: Remainder
Area 2: Eastern part

MENDOCINO COUNTY:
Area 1: Central and Southeastern parts
Area 2: Remainder

MONTEREY COUNTY
Area 1: Remainder
Area 2: Southwestern part

NEVADA COUNTY:
Area 1: All but the Northern portion along the border of Sierra County
Area 2: Remainder

PLACER COUNTY:
Area 1: All but the Central portion
Area 2: Remainder

PLUMAS COUNTY:
Area 1: Western portion
Area 2: Remainder

SHASTA COUNTY:
Area 1: All but the Northeastern corner
Area 2: Remainder

SIERRA COUNTY:
Area 1: Western part
Area 2: Remainder

SISKIYOU COUNTY:
Area 1: Central part
Area 2: Remainder

SONOMA COUNTY:
Area 1: All but the Northwestern corner
Area 2: Reaminder

TEHAMA COUNTY:
Area 1: All but the Western border with mendocino & Trinity Counties
Area 2: Remainder

TRINITY COUNTY:
Area 1: East Central part and the Northeaster border with Shasta County
Area 2: Remainder

TULARE COUNTY;
Area 1: Remainder
Area 2: Eastern part

TUOLUMNE COUNTY:
Area 1: Remainder
Area 2: Eastern Part

ENGI0003-019 07/01/2013

SEE AREA DESCRIPTIONS BELOW

	Rates	Fringes
OPERATOR: Power Equipment (LANDSCAPE WORK ONLY)		
GROUP 1		
AREA 1	$ 29.64	25.71
AREA 2	$ 31.64	25.71
GROUP 2		
AREA 1	$ 26.04	25.71
AREA 2	$ 28.04	25.71
GROUP 3		
AREA 1	$ 21.43	25.71
AREA 2	$ 23.43	25.71

GROUP DESCRIPTIONS:

GROUP 1: Landscape Finish Grade Operator: All finish grade work regardless of equipment used, and all equipment with a rating more than 65 HP.

GROUP 2: Landscape Operator up to 65 HP: All equipment with a manufacturer's rating of 65 HP or less except equipment covered by Group 1 or Group 3. The following equipment shall be included except when used for finish work as long as manufacturer's rating is 65 HP or less: A-Frame and Winch Truck, Backhoe, Forklift, Hydragraphic Seeder Machine, Roller, Rubber-Tired and Track Earthmoving Equipment, Skiploader, Straw Blowers, and Trencher 31 HP up to 65 HP.

GROUP 3: Landscae Utility Operator: Small Rubber-Tired Tractor, Trencher Under 31 HP.

AREA DESCRIPTIONS:

AREA 1: ALAMEDA, BUTTE, CONTRA COSTA, KINGS, MARIN, MERCED, NAPA, SACRAMENTO, SAN BENITO, SAN FRANCISCO, SAN JOAQUIN, SAN MATEO, SANTA CLARA, SANTA CRUZ, SOLANO, STANISLAUS, SUTTER, YOLO, AND YUBA COUNTIES

AREA 2 - MODOC COUNTY

THE REMAINING COUNTIES ARE SPLIT BETWEEN AREA 1 AND AREA 2 AS NOTED BELOW:

ALPINE COUNTY:
Area 1: Northernmost part
Area 2: Remainder

CALAVERAS COUNTY:
Area 1: Except Eastern part
Area 2: Eastern part

COLUSA COUNTY:
Area 1: Eastern part
Area 2: Remainder

DEL NORTE COUNTY:
Area 1: Extreme Southwestern corner
Area 2: Remainder

ELDORADO COUNTY:
Area 1: North Central part
Area 2: Remainder

FRESNO COUNTY
Area 1: Except Eastern part
Area 2: Eastern part

GLENN COUNTY:
Area 1: Eastern part
Area 2: Remainder

HUMBOLDT COUNTY:
Area 1: Except Eastern and Southwestern parts
Area 2: Remainder

LAKE COUNTY:
Area 1: Southern part
Area 2: Remainder

LASSEN COUNTY:
Area 1: Western part along the Southern portion of border with Shasta County
Area 2: Remainder

MADERA COUNTY

Area 1: Remainder
Area 2: Eastern part

MARIPOSA COUNTY
Area 1: Remainder
Area 2: Eastern part

MENDOCINO COUNTY:
Area 1: Central and Southeastern parts
Area 2: Remainder

MONTEREY COUNTY
Area 1: Remainder
Area 2: Southwestern part

NEVADA COUNTY:
Area 1: All but the Northern portion along the border of Sierra County
Area 2: Remainder

PLACER COUNTY:
Area 1: All but the Central portion
Area 2: Remainder

PLUMAS COUNTY:
Area 1: Western portion
Area 2: Remainder

SHASTA COUNTY:
Area 1: All but the Northeastern corner
Area 2: Remainder

SIERRA COUNTY:
Area 1: Western part
Area 2: Remainder

SISKIYOU COUNTY:
Area 1: Central part
Area 2: Remainder

SONOMA COUNTY:
Area 1: All but the Northwestern corner
Area 2: Reaminder

TEHAMA COUNTY:
Area 1: All but the Western border with mendocino & Trinity Counties
Area 2: Remainder

TRINITY COUNTY:
Area 1: East Central part and the Northeaster border with Shasta County
Area 2: Remainder

TULARE COUNTY;
Area 1: Remainder
Area 2: Eastern part

TUOLUMNE COUNTY:
Area 1: Remainder
Area 2: Eastern Part

IRON0377-002 07/01/2013

	Rates	Fringes
Ironworkers:		
Fence Erector	$ 26.58	17.74
Ornamental, Reinforcing and Structural	$ 33.00	26.30

PREMIUM PAY:

$6.00 additional per hour at the following locations:

China Lake Naval Test Station, Chocolate Mountains Naval Reserve-Niland,
Edwards AFB, Fort Irwin Military Station, Fort Irwin Training Center-Goldstone, San Clemente Island, San Nicholas Island, Susanville Federal Prison, 29 Palms - Marine Corps, U.S. Marine Base - Barstow, U.S. Naval Air Facility - Sealey, Vandenberg AFB

$4.00 additional per hour at the following locations:

Army Defense Language Institute - Monterey, Fallon Air Base, Naval Post Graduate School - Monterey, Yermo Marine Corps Logistics Center

$2.00 additional per hour at the following locations:

Port Hueneme, Port Mugu, U.S. Coast Guard Station - Two Rock

LABO0067-002 12/01/2013

AREA "A" - ALAMEDA, CONTRA COSTA, MARIN, SAN FRANCISCO, SAN MATEO AND SANTA CLARA COUNTIES

AREA "B" - ALPINE, AMADOR, BUTTE, CALAVERAS, COLUSA, DEL NORTE, EL DORADO, FRESNO, GLENN, HUMBOLDT, KINGS, LAKE, LASSEN, MADERA, MARIPOSA, MENDOCINO, MERCED, MODOC, MONTEREY, NAPA, NEVADA, PLACER, PLUMAS, SACRAMENTO, SAN BENITO, SAN JOAQUIN, SANTA CRUZ, SHASTA, SIERRA, SISKIYOU, SOLANO, SONOMA, STANISLAUS, SUTTER, TEHAMA, TRINITY, TULARE, TUOLUMNE, YOLO AND YUBA COUNTIES

	Rates	Fringes
Asbestos Removal Laborer		
Areas A & B	$ 19.66	9.02
LABORER (Lead Removal)		

Area A.....$ 27.89 19.20
Area B.....$ 26.89 19.20

ASBESTOS REMOVAL-SCOPE OF WORK: Site mobilization; initial site clean-up; site preparation; removal of asbestos-containing materials from walls and ceilings; or from pipes, boilers and mechanical systems only if they are being scrapped; encapsulation, enclosure and disposal of asbestos-containing materials by hand or with equipment or machinery; scaffolding; fabrication of temporary wooden barriers; and assembly of decontamination stations.

LABO0067-006 06/28/2010

AREA "A" - ALAMEDA, CONTRA COSTA, MARIN, SAN FRANCISCO, SAN MATEO AND SANTA CLARA COUNTIES

AREA "B" - ALPINE, AMADOR, BUTTE, CALAVERAS, COLUSA, EL DORADO, FRESNO, GLENN, KINGS, LASSEN, MADERA, MARIPOSA, MERCED, MODOC, MONTEREY, NAPA, NEVADA, PLACER, PLUMAS, SACRAMENTO, SAN BENITO, SAN JOAQUIN, SANTA CRUZ, SHASTA, SIERRA, SISKIYOU, SOLANO, SONOMA, STANISLAUS, SUTTER, TEHAMA, TRINITY, TULARE, TUOLUMNE, YOLO AND YUBA COUNTIES

	Rates	Fringes
Laborers: (CONSTRUCTION CRAFT LABORERS - AREA A:)		
Construction Specialist Group	$ 27.84	15.82
GROUP 1	$ 27.14	15.82
GROUP 1-a	$ 27.36	15.82
GROUP 1-c	$ 27.19	15.82
GROUP 1-e	$ 27.69	15.82
GROUP 1-f	$ 27.72	15.82
GROUP 1-g (Contra Costa County)	$ 27.34	15.82
GROUP 2	$ 26.99	15.82
GROUP 3	$ 26.89	15.82
GROUP 4	$ 20.58	15.82
See groups 1-b and 1-d under laborer classifications.		
Laborers: (CONSTRUCTION CRAFT LABORERS - AREA B:)		
Construction Specialist Group	$ 26.84	15.82
GROUP 1	$ 26.14	15.82
GROUP 1-a	$ 26.36	15.82
GROUP 1-c	$ 26.19	15.82
GROUP 1-e	$ 26.69	15.82
GROUP 1-f	$ 26.72	15.82
GROUP 2	$ 25.99	15.82
GROUP 3	$ 25.89	15.82
GROUP 4	$ 19.58	15.82
See groups 1-b and 1-d under laborer classifications.		
Laborers: (GUNITE - AREA A:)		

GROUP 1.....$ 28.10 15.82
GROUP 2.....$ 27.60 15.82
GROUP 3.....$ 27.60 15.82
GROUP 4.....$ 27.60 15.82

Laborers: (GUNITE - AREA B:)
GROUP 1.....$ 27.10 15.82
GROUP 2.....$ 26.60 15.82
GROUP 3.....$ 26.01 15.82
GROUP 4.....$ 25.89 15.82

Laborers: (WRECKING - AREA A:)
GROUP 1.....$ 27.14 15.82
GROUP 2.....$ 26.99 15.82

Laborers: (WRECKING - AREA B:)
GROUP 1.....$ 26.14 15.82
GROUP 2.....$ 25.99 15.82

Landscape Laborer (GARDENERS,
HORTICULTURAL & LANDSCAPE
LABORERS - AREA A:)
(1) New Construction.....$ 26.89 15.82
(2) Establishment Warranty
Period.....$ 20.58 15.82

Landscape Laborer (GARDENERS,
HORTICULURAL & LANDSCAPE
LABORERS - AREA B:)
(1) New Construction.....$ 25.89 15.82
(2) Establishment Warranty
Period.....$ 19.58 15.82

FOOTNOTES:
Laborers working off or with or from bos'n chairs, swinging scaffolds, belts shall receive $0.25 per hour above the applicable wage rate. This shall not apply to workers entitled to receive the wage rate set forth in Group 1-a below.

LABORER CLASSIFICATIONS

CONSTRUCTION SPECIALIST GROUP: Asphalt ironer and raker; Chainsaw; Laser beam in connection with laborers' work; Cast-in- place manhole form setter; Pressure pipelayer; Davis trencher - 300 or similar type (and all small trenchers); Blaster; Diamond driller; Multiple unit drill; Hydraulic drill

GROUP 1: Asphalt spreader boxes (all types); Barko, Wacker and similar type tampers; Buggymobile; Caulker, bander, pipewrapper, conduit layer, plastic pipelayer; Certified hazardous waste worker including Leade Abatement; Compactors of all types; Concrete and magnesite mixer, 1/2 yd. and under; Concrete pan work; Concrete sander; Concrete saw; Cribber and/or shoring; Cut granite curb setter; Dri-pak-it machine; Faller, logloader and bucker; Form raiser, slip forms; Green cutter; Headerboard, Hubsetter, aligner, by any method; High pressure blow pipe (1-1/2" or

over, 100 lbs. pressure/over); Hydro seeder and similar type; Jackhammer operator; Jacking of pipe over 12 inches; Jackson and similar type compactor; Kettle tender, pot and worker applying asphalt, lay-kold, creosote, lime, caustic and similar type materials (applying means applying, dipping or handling of such materials); Lagging, sheeting, whaling, bracing, trenchjacking, lagging hammer; Magnesite, epoxyresin, fiberglass, mastic worker (wet or dry); No joint pipe and stripping of same, including repair of voids; Pavement breaker and spader, including tool grinder; Perma curb; Pipelayer (including grade checking in connection with pipelaying); Precast-manhole setter; Pressure pipe tester; Post hole digger, air, gas and electric; Power broom sweeper; Power tampers of all types (except as shown in Group 2); Ram set gun and stud gun; Riprap stonepaver and rock-slinger, including placing of sacked concrete and/or sand (wet or dry) and gabions and similar type; Rotary scarifier or multiple head concrete chipping scarifier; Roto and Ditch Witch; Rototiller; Sandblaster, pot, gun, nozzle operators; Signalling and rigging; Tank cleaner; Tree climber; Turbo blaster; Vibrascreed, bull float in connection with laborers' work; Vibrator; Hazardous waste worker (lead removal); Asbestos and mold removal worker

GROUP 1-a: Joy drill model TWM-2A; Gardner-Denver model DH143 and similar type drills; Track driller; Jack leg driller; Wagon driller; Mechanical drillers, all types regardless of type or method of power; Mechanical pipe layers, all types regardless of type or method of power; Blaster and powder; All work of loading, placing and blasting of all powder and explosives of whatever type regardless of method used for such loading and placing; High scalers (including drilling of same); Tree topper; Bit grinder

GROUP 1-b: Sewer cleaners shall receive $4.00 per day above Group 1 wage rates. "Sewer cleaner" means any worker who handles or comes in contact with raw sewage in small diameter sewers. Those who work inside recently active, large diameter sewers, and all recently active sewer manholes shal receive $5.00 per day above Group 1 wage rates.

GROUP 1-c: Burning and welding in connection with laborers' work; Synthetic thermoplastics and similar type welding

GROUP 1-d: Maintenance and repair track and road beds. All employees performing work covered herein shall receive $ .25 per hour above their regular rate for all work performed on underground structures not specifically covered herein. This paragraph shall not be construed to apply to work below ground level in open cut. It shall apply to cut and cover work of subway construction after the temporary cover has been placed.

GROUP 1-e: Work on and/or in bell hole footings and shafts thereof, and work on and in deep footings. (A deep footing

is a hole 15 feet or more in depth.) In the event the depth of the footing is unknown at the commencement of excavation, and the final depth exceeds 15 feet, the deep footing wage rate would apply to all employees for each and every day worked on or in the excavation of the footing from the date of inception.

GROUP 1-f: Wire winding machine in connection with guniting or shot crete

GROUP 1-g, CONTRA COSTA COUNTY: Pipelayer (including grade checking in connection with pipelaying); Caulker; Bander; Pipewrapper; Conduit layer; Plastic pipe layer; Pressure pipe tester; No joint pipe and stripping of same, including repair of voids; Precast manhole setters, cast in place manhole form setters

GROUP 2: Asphalt shoveler; Cement dumper and handling dry cement or gypsum; Choke-setter and rigger (clearing work); Concrete bucket dumper and chute; Concrete chipping and grinding; Concrete laborer (wet or dry); Driller tender, chuck tender, nipper; Guinea chaser (stake), grout crew; High pressure nozzle, adductor; Hydraulic monitor (over 100 lbs. pressure); Loading and unloading, carrying and hauling of all rods and materials for use in reinforcing concrete construction; Pittsburgh chipper and similar type brush shredders; Sloper; Single foot, hand-held, pneumatic tamper; All pneumatic, air, gas and electric tools not listed in Groups 1 through 1-f; Jacking of pipe - under 12 inches

GROUP 3: Construction laborers, including bridge and general laborer; Dump, load spotter; Flag person; Fire watcher; Fence erector; Guardrail erector; Gardener, horticultural and landscape laborer; Jetting; Limber, brush loader and piler; Pavement marker (button setter); Maintenance, repair track and road beds; Streetcar and railroad construction track laborer; Temporary air and water lines, Victaulic or similar; Tool room attendant (jobsite only)

GROUP 4: Final clean-up work of debris, grounds and building including but not limited to: street cleaner; cleaning and washing windows; brick cleaner (jobsite only); material cleaner (jobsite only). The classification "material cleaner" is to be utilized under the following conditions:
A: at demolition site for the salvage of the material.
B: at the conclusion of a job where the material is to be salvaged and stocked to be reused on another job.
C: for the cleaning of salvage material at the jobsite or temporary jobsite yard.

The material cleaner classification should not be used in the performance of "form stripping, cleaning and oiling and moving to the next point of erection".

GUNITE LABORER CLASSIFICATIONS

GROUP 1: Structural Nozzleman

GROUP 2: Nozzleman, Gunman, Potman, Groundman

GROUP 3: Reboundman

GROUP 4: Gunite laborer

WRECKING WORK LABORER CLASSIFICATIONS

GROUP 1: Skilled wrecker (removing and salvaging of sash, windows and materials)

GROUP 2: Semi-skilled wrecker (salvaging of other building materials)

LABO0073-002 07/01/2013

CALAVERAS AND SAN JOAQUIN COUNTIES

	Rates	Fringes
LABORER (TRAFFIC CONTROL/LANE CLOSURE)		
Escort Driver, Flag Person..	$ 26.64	18.74
Traffic Control Person I....	$ 26.94	18.74
Traffic Control Person II...	$ 24.44	18.74

TRAFFIC CONTROL PERSON I: Layout of traffic control, crash cushions, construction area and roadside signage.

TRAFFIC CONTROL PERSON II: Installation and removal of temporary/permanent signs, markers, delineators and crash cushions.

LABO0073-003 07/01/2013

SAN JOAQUIN COUNTY

	Rates	Fringes
LABORER		
Mason Tender-Brick.....	$ 31.70	16.53

LABO0073-005 07/01/2013

	Rates	Fringes
Tunnel and Shaft Laborers:		
GROUP 1.....	$ 34.10	16.53
GROUP 2.....	$ 33.87	16.53

GROUP 3	$ 33.62	16.53
GROUP 4	$ 33.17	16.53
GROUP 5	$ 32.63	16.53
Shotcrete Specialist	$ 36.12	16.53

TUNNEL AND SHAFT CLASSIFICATIONS

GROUP 1: Diamond driller; Groundmen; Gunite and shotcrete nozzlemen

GROUP 2: Rodmen; Shaft work & raise (below actual or excavated ground level)

GROUP 3: Bit grinder; Blaster, driller, powdermen, heading; Cherry pickermen - where car is lifted; Concrete finisher in tunnel; Concrete screedman; Grout pumpman and potman; Gunite & shotcrete gunman & potman; Headermen; High pressure nozzleman; Miner - tunnel, including top and bottom man on shaft and raise work; Nipper; Nozzleman on slick line; Sandblaster - potman, Robotic Shotcrete Placer, Segment Erector, Tunnel Muck Hauler, Steel Form raiser and setter; Timberman, retimberman (wood or steel or substitute materials therefore); Tugger (for tunnel laborer work); Cable tender; Chuck tender; Powderman - primer house

GROUP 4: Vibrator operator, pavement breaker; Bull gang - muckers, trackmen; Concrete crew - includes rodding and spreading, Dumpmen (any method)

GROUP 5: Grout crew; Reboundman; Swamper/ Brakeman

LABO0166-001 07/01/2006

ALAMEDA AND CONTRA COSTA COUNTIES:

	Rates	Fringes
Brick Tender	$ 25.91	14.65

FOOTNOTES: Work on jobs where heat-protective clothing is required: $2.00 per hour additional. Work at grinders: $.25 per hour additional. Manhole work: $2.00 per day additional.

LABO0166-002 07/01/2007

SAN FRANCISCO AND SAN MATEO COUNTIES:

	Rates	Fringes
MASON TENDER, BRICK	$ 26.93	16.50

FOOTNOTES: Underground work such as sewers, manholes, catch basins, sewer pipes, telephone conduits, tunnels and cut trenches: $5.00 per day additional. Work in live sewage: $2.50 per day additional.

LABO0261-003 07/01/2013

SAN FRANCISCO AND SAN MATEO COUNTIES

	Rates	Fringes
LABORER (TRAFFIC CONTROL/LANE CLOSURE)		
Escort Driver, Flag Person..	$ 27.64	18.74
Traffic Control Person I....	$ 27.94	18.74
Traffic Control Person II...	$ 25.44	18.74

TRAFFIC CONTROL PERSON I: Layout of traffic control, crash cushions, construction area and roadside signage.

TRAFFIC CONTROL PERSON II: Installation and removal of temporary/permanent signs, markers, delineators and crash cushions.

LABO0261-005 07/01/2013

SAN FRANCISCO AND SAN MATEO COUNTIES

	Rates	Fringes
Tunnel and Shaft Laborers:		
GROUP 1.....	$ 34.10	16.53
GROUP 2.....	$ 33.87	16.53
GROUP 3.....	$ 33.62	16.53
GROUP 4.....	$ 33.17	16.53
GROUP 5.....	$ 32.63	16.53
Shotcrete Specialist.....	$ 36.12	16.53

TUNNEL AND SHAFT CLASSIFICATIONS

GROUP 1: Diamond driller; Groundmen; Gunite and shotcrete nozzlemen

GROUP 2: Rodmen; Shaft work & raise (below actual or excavated ground level)

GROUP 3: Bit grinder; Blaster, driller, powdermen, heading; Cherry pickermen - where car is lifted; Concrete finisher in tunnel; Concrete screedman; Grout pumpman and potman; Gunite & shotcrete gunman & potman; Headermen; High pressure nozzleman; Miner - tunnel, including top and bottom man on shaft and raise work; Nipper; Nozzleman on slick line; Sandblaster - potman, Robotic Shotcrete Placer, Segment Erector, Tunnel Muck Hauler, Steel Form raiser and setter; Timberman, retimberman (wood or steel or substitute materials therefore); Tugger (for tunnel laborer work); Cable tender; Chuck tender; Powderman - primer house

GROUP 4: Vibrator operator, pavement breaker; Bull gang -

muckers, trackmen; Concrete crew - includes rodding and spreading, Dumpmen (any method)

GROUP 5: Grout crew; Reboundman; Swamper/ Brakeman

LABO0270-003 07/01/2013

AREA A: SANTA CLARA

AREA B: MONTEREY, SAN BENITO AND SANTA CRUZ COUNTIES

	Rates	Fringes
LABORER (TRAFFIC CONTROL/LANE CLOSURE)		
Escort Driver, Flag Person		
Area A	$ 27.64	18.74
Area B	$ 26.64	18.74
Traffic Control Person I		
Area A	$ 27.94	18.74
Area B	$ 26.94	18.74
Traffic Control Person II		
Area A	$ 25.44	18.74
Area B	$ 24.44	18.74

TRAFFIC CONTROL PERSON I: Layout of traffic control, crash cushions, construction area and roadside signage.

TRAFFIC CONTROL PERSON II: Installation and removal of temporary/permanent signs, markers, delineators and crash cushions.

LABO0270-004 07/01/2013

MONTEREY, SAN BENITO, SANTA CLARA, AND SANTA CRUZ COUNTIES

	Rates	Fringes
Tunnel and Shaft Laborers:		
GROUP 1	$ 34.10	16.53
GROUP 2	$ 33.87	16.53
GROUP 3	$ 33.62	16.53
GROUP 4	$ 33.17	16.53
GROUP 5	$ 32.63	16.53
Shotcrete Specialist	$ 36.12	16.53

TUNNEL AND SHAFT CLASSIFICATIONS

GROUP 1: Diamond driller; Groundmen; Gunite and shotcrete nozzlemen

GROUP 2: Rodmen; Shaft work & raise (below actual or excavated ground level)

GROUP 3: Bit grinder; Blaster, driller, powdermen, heading; Cherry pickermen - where car is lifted; Concrete finisher in tunnel; Concrete screedman; Grout pumpman and potman; Gunite & shotcrete gunman & potman; Headermen; High pressure nozzleman; Miner - tunnel, including top and bottom man on shaft and raise work; Nipper; Nozzleman on slick line; Sandblaster - potman, Robotic Shotcrete Placer, Segment Erector, Tunnel Muck Hauler, Steel Form raiser and setter; Timberman, retimberman (wood or steel or substitute materials therefore); Tugger (for tunnel laborer work); Cable tender; Chuck tender; Powderman - primer house

GROUP 4: Vibrator operator, pavement breaker; Bull gang - muckers, trackmen; Concrete crew - includes rodding and spreading, Dumpmen (any method)

GROUP 5: Grout crew; Reboundman; Swamper/ Brakeman

LABO0270-005 07/01/2013

MONTEREY AND SAN BENITO COUNTIES

	Rates	Fringes
LABORER		
Mason Tender-Brick	$ 31.70	16.53

LABO0294-001 07/01/2013

FRESNO, KINGS AND MADERA COUNTIES

	Rates	Fringes
LABORER (Brick)		
Mason Tender-Brick	$ 31.52	16.53

LABO0294-002 07/01/2013

FRESNO, KINGS, AND MADERA COUNTIES

	Rates	Fringes
LABORER (TRAFFIC CONTROL/LANE CLOSURE)		
Escort Driver, Flag Person	$ 26.64	18.74
Traffic Control Person I	$ 26.94	18.74
Traffic Control Person II	$ 24.44	18.74

TRAFFIC CONTROL PERSON I: Layout of traffic control, crash cushions, construction area and roadside signage.

TRAFFIC CONTROL PERSON II: Installation and removal of temporary/permanent signs, markers, delineators and crash cushions.

LABO0294-005 07/01/2013

FRESNO, KINGS, AND MADERA COUNTIES

	Rates	Fringes
Tunnel and Shaft Laborers:		
GROUP 1	$ 34.10	16.53
GROUP 2	$ 33.87	16.53
GROUP 3	$ 33.62	16.53
GROUP 4	$ 33.17	16.53
GROUP 5	$ 32.63	16.53
Shotcrete Specialist	$ 36.12	16.53

TUNNEL AND SHAFT CLASSIFICATIONS

GROUP 1: Diamond driller; Groundmen; Gunite and shotcrete nozzlemen

GROUP 2: Rodmen; Shaft work & raise (below actual or excavated ground level)

GROUP 3: Bit grinder; Blaster, driller, powdermen, heading; Cherry pickermen - where car is lifted; Concrete finisher in tunnel; Concrete screedman; Grout pumpman and potman; Gunite & shotcrete gunman & potman; Headermen; High pressure nozzleman; Miner - tunnel, including top and bottom man on shaft and raise work; Nipper; Nozzleman on slick line; Sandblaster - potman, Robotic Shotcrete Placer, Segment Erector, Tunnel Muck Hauler, Steel Form raiser and setter; Timberman, retimberman (wood or steel or substitute materials therefore); Tugger (for tunnel laborer work); Cable tender; Chuck tender; Powderman - primer house

GROUP 4: Vibrator operator, pavement breaker; Bull gang - muckers, trackmen; Concrete crew - includes rodding and spreading, Dumpmen (any method)

GROUP 5: Grout crew; Reboundman; Swamper/ Brakeman

LABO0304-002 07/01/2013

ALAMEDA COUNTY

	Rates	Fringes
LABORER (TRAFFIC CONTROL/LANE CLOSURE)		
Escort Driver, Flag Person	$ 27.64	18.74
Traffic Control Person I	$ 27.94	18.74
Traffic Control Person II	$ 25.44	18.74

TRAFFIC CONTROL PERSON I: Layout of traffic control, crash cushions, construction area and roadside signage.

TRAFFIC CONTROL PERSON II: Installation and removal of

temporary/permanent signs, markers, delineators and crash cushions.

LABO0304-003 07/01/2013

ALAMEDA COUNTY

	Rates	Fringes
Tunnel and Shaft Laborers:		
GROUP 1	$ 34.10	16.53
GROUP 2	$ 33.87	16.53
GROUP 3	$ 33.62	16.53
GROUP 4	$ 33.17	16.53
GROUP 5	$ 32.63	16.53
Shotcrete Specialist	$ 36.12	16.53

TUNNEL AND SHAFT CLASSIFICATIONS

GROUP 1: Diamond driller; Groundmen; Gunite and shotcrete nozzlemen

GROUP 2: Rodmen; Shaft work & raise (below actual or excavated ground level)

GROUP 3: Bit grinder; Blaster, driller, powdermen, heading; Cherry pickermen - where car is lifted; Concrete finisher in tunnel; Concrete screedman; Grout pumpman and potman; Gunite & shotcrete gunman & potman; Headermen; High pressure nozzleman; Miner - tunnel, including top and bottom man on shaft and raise work; Nipper; Nozzleman on slick line; Sandblaster - potman, Robotic Shotcrete Placer, Segment Erector, Tunnel Muck Hauler, Steel Form raiser and setter; Timberman, retimberman (wood or steel or substitute materials therefore); Tugger (for tunnel laborer work); Cable tender; Chuck tender; Powderman - primer house

GROUP 4: Vibrator operator, pavement breaker; Bull gang - muckers, trackmen; Concrete crew - includes rodding and spreading, Dumpmen (any method)

GROUP 5: Grout crew; Reboundman; Swamper/ Brakeman

LABO0324-002 07/01/2013

CONTRA COSTA COUNTY

	Rates	Fringes
LABORER (TRAFFIC CONTROL/LANE CLOSURE)		
Escort Driver, Flag Person	$ 27.64	18.74
Traffic Control Person I	$ 27.94	18.74
Traffic Control Person II	$ 25.44	18.74

TRAFFIC CONTROL PERSON I: Layout of traffic control, crash cushions, construction area and roadside signage.

TRAFFIC CONTROL PERSON II: Installation and removal of temporary/permanent signs, markers, delineators and crash cushions.

LABO0324-006 07/01/2013

CONTRA COSTA COUNTY

	Rates	Fringes
Tunnel and Shaft Laborers:		
GROUP 1	$ 34.10	16.53
GROUP 2	$ 33.87	16.53
GROUP 3	$ 33.62	16.53
GROUP 4	$ 33.17	16.53
GROUP 5	$ 32.63	16.53
Shotcrete Specialist	$ 36.12	16.53

TUNNEL AND SHAFT CLASSIFICATIONS

GROUP 1: Diamond driller; Groundmen; Gunite and shotcrete nozzlemen

GROUP 2: Rodmen; Shaft work & raise (below actual or excavated ground level)

GROUP 3: Bit grinder; Blaster, driller, powdermen, heading; Cherry pickermen - where car is lifted; Concrete finisher in tunnel; Concrete screedman; Grout pumpman and potman; Gunite & shotcrete gunman & potman; Headermen; High pressure nozzleman; Miner - tunnel, including top and bottom man on shaft and raise work; Nipper; Nozzleman on slick line; Sandblaster - potman, Robotic Shotcrete Placer, Segment Erector, Tunnel Muck Hauler, Steel Form raiser and setter; Timberman, retimberman (wood or steel or substitute materials therefore); Tugger (for tunnel laborer work); Cable tender; Chuck tender; Powderman - primer house

GROUP 4: Vibrator operator, pavement breaker; Bull gang - muckers, trackmen; Concrete crew - includes rodding and spreading, Dumpmen (any method)

GROUP 5: Grout crew; Reboundman; Swamper/ Brakeman

LABO1130-002 07/01/2013

MARIPOSA, MERCED, STANISLAUS, AND TUOLUMNE COUNTIES

	Rates	Fringes
LABORER (TRAFFIC CONTROL/LANE CLOSURE)		

Escort Driver, Flag Person..	$ 26.64	18.74
Traffic Control Person I....	$ 26.94	18.74
Traffic Control Person II...	$ 24.44	18.74

TRAFFIC CONTROL PERSON I: Layout of traffic control, crash cushions, construction area and roadside signage.

TRAFFIC CONTROL PERSON II: Installation and removal of temporary/permanent signs, markers, delineators and crash cushions.

LABO1130-003 07/01/2013

MARIPOSA, MERCED, STANISLAUS, AND TUOLUMNE COUNTIES

	Rates	Fringes
Tunnel and Shaft Laborers:		
GROUP 1.....	$ 34.10	16.53
GROUP 2.....	$ 33.87	16.53
GROUP 3.....	$ 33.62	16.53
GROUP 4.....	$ 33.17	16.53
GROUP 5.....	$ 32.63	16.53
Shotcrete Specialist.....	$ 36.12	16.53

TUNNEL AND SHAFT CLASSIFICATIONS

GROUP 1: Diamond driller; Groundmen; Gunite and shotcrete nozzlemen

GROUP 2: Rodmen; Shaft work & raise (below actual or excavated ground level)

GROUP 3: Bit grinder; Blaster, driller, powdermen, heading; Cherry pickermen - where car is lifted; Concrete finisher in tunnel; Concrete screedman; Grout pumpman and potman; Gunite & shotcrete gunman & potman; Headermen; High pressure nozzleman; Miner - tunnel, including top and bottom man on shaft and raise work; Nipper; Nozzleman on slick line; Sandblaster - potman, Robotic Shotcrete Placer, Segment Erector, Tunnel Muck Hauler, Steel Form raiser and setter; Timberman, retimberman (wood or steel or substitute materials therefore); Tugger (for tunnel laborer work); Cable tender; Chuck tender; Powderman - primer house

GROUP 4: Vibrator operator, pavement breaker; Bull gang - muckers, trackmen; Concrete crew - includes rodding and spreading, Dumpmen (any method)

GROUP 5: Grout crew; Reboundman; Swamper/ Brakeman

LABO1130-005 07/01/2013

MARIPOSA, MERCED, STANISLAUS AND TUOLUMNE COUNTIES

	Rates	Fringes
LABORER		
Mason Tender-Brick	$ 31.70	16.53

LABO1414-004 08/07/2013

SAN FRANCISCO AND SAN MATEO COUNTIES:

	Rates	Fringes
PLASTER TENDER	$ 30.00	16.36

Work on a swing stage scaffold: $1.00 per hour additional.

LABO1414-007 08/07/2013

CALAVERAS, FRESNO, KINGS, MADERA, MARIPOSA, MERCED, SAN JOAQUIN, STANISLAUS & TUOLUMNE

	Rates	Fringes
Plasterer tender	$ 30.00	16.36

Work on a swing stage scaffold: $1.00 per hour additional.

LABO1414-008 08/07/2013

ALAMEDA AND CONTRA COSTA COUNTIES:

	Rates	Fringes
Plasterer tender	$ 30.00	16.36

Work on a swing stage scaffold: $1.00 per hour additional.

LABO1414-010 08/07/2013

SANTA CLARA AND SANTA CRUZ COUNTIES

	Rates	Fringes
PLASTER TENDER		
4 Stories and under	$ 28.00	16.36
5 Stories and above	$ 30.00	16.36

Work on a swing stage scaffold: $1.00 per hour additional.

LABO1414-011 08/07/2013

MONTEREY AND SAN BENITO COUNTIES

	Rates	Fringes
Plasterer tender	$ 30.00	16.36

Work on a swing stage scaffold: $1.00 per hour additional.

PAIN0016-001 01/01/2013

ALAMEDA, CONTRA COSTA, MONTEREY, SAN BENITO, SAN MATEO, SANTA CLARA, AND SANTA CRUZ COUNTIES

	Rates	Fringes
Painters:.....	$ 33.86	20.26

PREMIUMS:

EXOTIC MATERIALS - $0.75 additional per hour.
SPRAY WORK: - $0.50 additional per hour.
INDUSTRIAL PAINTING - $0.25 additional per hour
[Work on industrial buildings used for the manufacture and processing of goods for sale or service; steel construction (bridges), stacks, towers, tanks, and similar structures]

HIGH WORK:
over 50 feet - $2.00 per hour additional
100 to 180 feet - $4.00 per hour additional
Over 180 feet - $6.00 per houir additional

PAIN0016-003 01/01/2013

AREA 1: ALAMEDA, CONTRA COSTA, SAN FRANCISCO, SAN MATEO & SANTA CLARA COUNTIES

AREA 2: CALAVERAS, MARIPOA, MERCED, MONTEREY, SAN BENITO, SAN JOAQUIN, SANTA CRUZ, STANISLAUS & TUOLUMNE COUNTIES

	Rates	Fringes
Drywall Finisher/Taper		
AREA 1.....	$ 40.37	20.07
AREA 2.....	$ 36.24	18.67

PAIN0016-012 01/01/2013

ALAMEDA, CONTRA COSTA, MARIPOSA, MERCED, MONTEREY, SAN BENITO, SAN FRANCISCO, SAN MATEO, SANTA CLARA AND SANTA CRUZ COUNTIES

	Rates	Fringes
SOFT FLOOR LAYER.....	$ 44.87	17.98

PAIN0016-015 01/01/2013

CALAVERAS, MARIPOSA, MERCED, SAN JOAQUIN, STANISLAUS & TUOLUMNE COUNTIES

	Rates	Fringes
PAINTER		
Brush	$ 29.06	15.98

FOOTNOTES:
SPRAY/SANDBLAST: $0.50 additional per hour.
EXOTIC MATERIALS: $1.00 additional per hour.
HIGH TIME: Over 50 ft above ground or water level $2.00 additional per hour. 100 to 180 ft above ground or water level $4.00 additional per hour. Over 180 ft above ground or water level $6.00 additional per hour.

PAIN0016-022 01/01/2013

SAN FRANCISCO COUNTY

	Rates	Fringes
PAINTER	$ 37.48	20.26

PAIN0169-001 01/01/2013

FRESNO, KINGS, MADERA, MARIPOSA AND MERCED COUNTIES:

	Rates	Fringes
GLAZIER	$ 32.48	18.20

PAIN0169-005 01/01/2013

ALAMEDA CONTRA COSTA, MONTEREY, SAN BENITO, SAN FRANCISCO, SAN MATEO, SANTA CLARA & SANTA CRUZ COUNTIES

	Rates	Fringes
GLAZIER	$ 41.88	21.59

PAIN0294-004 01/01/2013

FRESNO, KINGS AND MADERA COUNTIES

	Rates	Fringes
PAINTER		
Brush, Roller	$ 25.67	15.63
Drywall Finisher/Taper	$ 30.47	16.81

FOOTNOTE:
Spray Painters & Paperhangers recive $1.00 additional per hour. Painters doing Drywall Patching receive $1.25 additional per hour. Lead Abaters & Sandblasters receive $1.50 additional per hour. High Time - over 30 feet (does not include work from a lift) $0.75 per hour additional.

PAIN0294-005 01/01/2013

FRESNO, KINGS & MADERA

	Rates	Fringes
SOFT FLOOR LAYER.....	$ 27.83	15.40

PAIN0767-001 01/01/2013

CALAVERAS, SAN JOAQUIN, STANISLAUS AND TUOLUMNE COUNTIES:

	Rates	Fringes
GLAZIER.....	$ 32.24	19.88

PAID HOLIDAYS: New Year's Day, Martin Luther King, Jr. Day, President's Day, Memorial Day, Independence Day, Labor Day, Veteran's Day, Thanksgiving Day, and Christmas Day.

Employee rquired to wear a body harness shall receive $1.50 per hour above the basic hourly rate at any elevation.

PAIN1176-001 07/01/2013

HIGHWAY IMPR0VEMENT

	Rates	Fringes
Parking Lot Striping/Highway Marking:		
GROUP 1.....	$ 28.27	11.65
GROUP 2.....	$ 28.60	11.65
GROUP 3.....	$ 26.96	11.65

CLASSIFICATIONS

GROUP 1: Striper: Layout and application of painted traffic stripes and marking; hot thermo plastic; tape, traffic stripes and markings

GROUP 2: Gamecourt & Playground Installer

GROUP 3: Protective Coating, Pavement Sealing

PAIN1237-003 01/01/2013

CALAVERAS; SAN JOAQUIN COUNTIES; STANISLAUS AND TUOLUMNE COUNTIES:

	Rates	Fringes

SOFT FLOOR LAYER.....$ 28.25 16.73

PLAS0066-002 08/01/2011

ALAMEDA, CONTRA COSTA, SAN MATEO AND SAN FRANCISCO COUNTIES:

	Rates	Fringes
PLASTERER	$ 33.13	24.64

PLAS0300-001 07/01/2009

	Rates	Fringes
PLASTERER		
AREA 188: Fresno	$ 29.72	14.21
AREA 224: San Benito, Santa Clara, Santa Cruz	$ 34.22	14.08
AREA 295: Calaveras & San Joaquin Couonties	$ 32.82	15.10
AREA 337: Monterey County	$ 31.01	13.93
AREA 429: Mariposa, Merced, Stanislaus, Tuolumne Counties	$ 32.82	15.30

PLAS0300-005 06/28/2010

	Rates	Fringes
CEMENT MASON/CONCRETE FINISHER	$ 28.65	18.56

PLUM0038-001 07/01/2013

SAN FRANCISCO COUNTY

	Rates	Fringes
PLUMBER (Plumber, Steamfitter, Refrigeration Fitter)	$ 62.00	42.39

PLUM0038-005 07/01/2013

SAN FRANCISCO COUNTY

	Rates	Fringes
Landscape/Irrigation Fitter (Underground/Utility Fitter)	$ 52.70	31.45

---

* PLUM0062-001 01/01/2014

MONTEREY AND SANTA CRUZ COUNTIES

	Rates	Fringes
PLUMBER & STEAMFITTER	$ 41.05	24.89

PLUM0159-001 07/01/2013

CONTRA COSTA COUNTY

	Rates	Fringes
Plumber and steamfitter		
(1) Refrigeration	$ 50.78	31.34
(2) All other work	$ 51.78	31.34

---

* PLUM0246-001 01/01/2014

FRESNO, KINGS & MADERA COUNTIES

	Rates	Fringes
PLUMBER & STEAMFITTER	$ 36.65	25.14

PLUM0246-004 07/01/2013

FRESNO, MERCED & SAN JOAQUIN COUNIES

	Rates	Fringes
PLUMBER (PIPE TRADESMAN)	$ 13.00	9.77

PIPE TRADESMAN SCOPE OF WORK:
Installation of corrugated metal piping for drainage, as well as installation of corrugated metal piping for culverts in connection with storm sewers and drains; Grouting, dry packing and diapering of joints, holes or chases including paving over joints, in piping; Temporary piping for dirt work for building site preparation; Operating jack hammers, pavement breakers, chipping guns, concrete saws and spades to cut holes, chases and channels for piping systems; Digging, grading, backfilling and ground preparation for all types of pipe to all points of the jobsite; Ground preparation including ground leveling, layout and planting of shrubbery, trees and ground cover, including watering, mowing, edging, pruning and fertilizing, the breaking of concrete, digging, backfilling and tamping for the preparation and completion of all work in connection with lawn sprinkler and landscaping; Loading, unloading and distributing materials at jobsite; Putting away materials in storage bins in jobsite secure storage area; Demolition of piping and fixtures for remodeling and additions; Setting up and tearing down work benches, ladders and job shacks; Clean-up and sweeping of jobsite; Pipe wrapping and waterproofing where tar or similar material is applied for protection of buried piping; Flagman

---

PLUM0342-001 07/01/2013

ALAMEDA & CONTRA COSTA COUNTIES

	Rates	Fringes
PIPEFITTER		
CONTRA COSTA COUNTY.....	$ 53.71	34.19
PLUMBER, PIPEFITTER, STEAMFITTER		
ALAMEDA COUNTY.....	$ 53.71	34.19

PLUM0355-004 07/01/2013

ALAMEDA, CALAVERAS, CONTRA COSTA, FRESNO, KINGS, MADERA, MARIPOSA, MERCED, MONTEREY, SAN BENITO, SAN JOAQUIN, SAN MATEO, SANTA CLARA, SANTA CRUZ, STANISLAUS, AND TUOLUMNE COUNTIES:

	Rates	Fringes
Underground Utility Worker		
/Landscape Fitter.....	$ 28.55	8.30

PLUM0393-001 07/01/2013

SAN BENITO AND SANTA CLARA COUNTIES

	Rates	Fringes
PLUMBER/PIPEFITTER.....	$ 57.41	30.08

---

* PLUM0442-001 01/01/2014

CALAVERAS, MARIPOSA, MERCED, SAN JOAQUIN, STANISLAUS & TUOLUMNE COUNTIES

	Rates	Fringes
PLUMBER & STEAMFITTER.....	$ 35.00	24.99

PLUM0467-001 07/01/2013

SAN MATEO COUNTY

	Rates	Fringes
Plumber/Pipefitter/Steamfitter...	$ 56.45	29.66

ROOF0027-002 01/01/2014

FRESNO, KINGS, AND MADERA COUNTIES

	Rates	Fringes
ROOFER.....	$ 24.47	13.30

FOOTNOTE: Work with pitch, pitch base of pitch impregnated products or any material containing coal tar pitch, on any building old or new, where both asphalt and pitchers are

used in the application of a built-up roof or tear off:
$2.00 per hour additional.

ROOF0040-002 08/01/2012

SAN FRANCISCO & SAN MATEO COUNTIES:

	Rates	Fringes
ROOFER	$ 33.61	12.37

ROOF0081-001 08/01/2011

ALAMEDA AND CONTRA COSTA COUNTIES:

	Rates	Fringes
Roofer	$ 33.16	10.90

ROOF0081-004 08/01/2012

CALAVERAS, MARIPOSA, MERCED, SAN JOAQUIN, STANISLAUS AND TUOLUMNE COUNTIES:

	Rates	Fringes
ROOFER	$ 29.99	11.82

ROOF0095-002 08/01/2012

MONTEREY, SAN BENITO, SANTA CLARA, AND SANTA CRUZ COUNTIES:

	Rates	Fringes
ROOFER		
Journeyman	$ 36.62	13.16
Kettle person (2 kettles); Bitumastic, Enameler, Coal Tar, Pitch and Mastic worker	$ 38.62	13.16

SFCA0483-001 01/01/2014

ALAMEDA, CONTRA COSTA, SAN FRANCISCO, SAN MATEO AND SANTA CLARA COUNTIES:

	Rates	Fringes
SPRINKLER FITTER (FIRE)	$ 52.42	25.62

SFCA0669-011 07/01/2013

CALAVERAS, FRESNO, KINGS, MADERA, MARIPOSA, MERCED, MONTEREY, SAN BENITO, SAN JOAQUIN, SANTA CRUZ, STANISLAUS AND TUOLUMNE

COUNTIES:

	Rates	Fringes
SPRINKLER FITTER	$ 32.98	19.35

SHEE0104-001 07/01/2013

AREA 1: ALAMEDA, CONTRA COSTA, SAN FRANCISCO, SAN MATEO, SANTA CLARA

AREA 2: MONTEREY & SAN BENITO

AREA 3: SANTA CRUZ

	Rates	Fringes
SHEET METAL WORKER		
AREA 1:		
Mechanical Contracts under $200,000	$ 51.30	35.96
All Other Work	$ 52.80	34.46
AREA 2	$ 40.26	27.56
AREA 3	$ 42.66	27.16

SHEE0104-003 07/01/2013

CALAVERAS AND SAN JOAQUIN COUNTIES:

	Rates	Fringes
SHEET METAL WORKER	$ 35.87	26.88

SHEE0104-005 07/01/2013

MARIPOSA, MERCED, STANISLAUS AND TUOLUMNE COUNTIES:

	Rates	Fringes
SHEET METAL WORKER (Excluding metal deck and siding)	$ 35.57	29.36

SHEE0104-007 07/01/2013

FRESNO, KINGS, AND MADERA COUNTIES:

	Rates	Fringes
SHEET METAL WORKER	$ 34.49	29.66

SHEE0104-015 07/01/2013

ALAMEDA, CONTRA COSTA, MONTEREY, SAN BENITO, SAN FRANCISCO, SAN MATEO, SANTA CLARA AND SANTA CRUZ COUNTIES:

	Rates	Fringes
SHEET METAL WORKER (Metal Decking and Siding only)	$ 52.80	34.46

SHEE0104-018 07/01/2013

CALAVERAS, FRESNO, KINGS, MADERA, MARIPOSA, MERCED, SAN JOAQUIN, STANISLAUS AND TUOLUMNE COUNTIES:

	Rates	Fringes
Sheet metal worker (Metal decking and siding only)	$ 35.87	26.88

TEAM0094-001 07/01/2013

	Rates	Fringes
Truck drivers:		
GROUP 1	$ 27.44	23.69
GROUP 2	$ 27.74	23.69
GROUP 3	$ 28.04	23.69
GROUP 4	$ 28.39	23.69
GROUP 5	$ 28.74	23.69

FOOTNOTES:

Articulated dump truck; Bulk cement spreader (with or without auger); Dumpcrete truck; Skid truck (debris box); Dry pre-batch concrete mix trucks; Dumpster or similar type; Slurry truck: Use dump truck yardage rate.

Heater planer; Asphalt burner; Scarifier burner; Industrial lift truck (mechanical tailgate); Utility and clean-up truck: Use appropriate rate for the power unit or the equipment utilized.

TRUCK DRIVER CLASSIFICATIONS

GROUP 1: Dump trucks, under 6 yds.; Single unit flat rack (2-axle unit); Nipper truck (when flat rack truck is used appropriate flat rack shall apply); Concrete pump truck (when flat rack truck is used appropriate flat rack shall apply); Concrete pump machine; Fork lift and lift jitneys; Fuel and/or grease truck driver or fuel person; Snow buggy; Steam cleaning; Bus or personhaul driver; Escort or pilot car driver; Pickup truck; Teamster oiler/greaser and/or serviceperson; Hook tender (including loading and unloading); Team driver; Tool room attendant (refineries)

GROUP 2: Dump trucks, 6 yds. and under 8 yds.; Transit mixers, through 10 yds.; Water trucks, under 7,000 gals.; Jetting trucks, under 7,000 gals.; Single-unit flat rack (3-axle unit); Highbed heavy duty transport; Scissor truck; Rubber-tired muck car (not self-loaded); Rubber-tired truck

jumbo; Winch truck and "A" frame drivers; Combination winch truck with hoist; Road oil truck or bootperson; Buggymobile; Ross, Hyster and similar straddle carriers; Small rubber-tired tractor

GROUP 3: Dump trucks, 8 yds. and including 24 yds.; Transit mixers, over 10 yds.; Water trucks, 7,000 gals. and over; Jetting trucks, 7,000 gals. and over; Vacuum trucks under 7500 gals. Trucks towing tilt bed or flat bed pull trailers; Lowbed heavy duty transport; Heavy duty transport tiller person; Self- propelled street sweeper with self-contained refuse bin; Boom truck - hydro-lift or Swedish type extension or retracting crane; P.B. or similar type self-loading truck; Tire repairperson; Combination bootperson and road oiler; Dry distribution truck (A bootperson when employed on such equipment, shall receive the rate specified for the classification of road oil trucks or bootperson); Ammonia nitrate distributor, driver and mixer; Snow Go and/or plow

GROUP 4: Dump trucks, over 25 yds. and under 65 yds.; Water pulls - DW 10's, 20's, 21's and other similar equipment when pulling Aqua/pak or water tank trailers; Helicopter pilots (when transporting men and materials); Lowbedk Heavy Duty Transport up to including 7 axles; DW10's, 20's, 21's and other similar Cat type, Terra Cobra, LeTourneau Pulls, Tournorocker, Euclid and similar type equipment when pulling fuel and/or grease tank trailers or other miscellaneous trailers; Vacuum Trucks 7500 gals and over and truck repairman

GROUP 5: Dump trucks, 65 yds. and over; Holland hauler; Low bed Heavy Duty Transport over 7 axles

---

WELDERS - Receive rate prescribed for craft performing operation to which welding is incidental.

==========

Unlisted classifications needed for work not included within the scope of the classifications listed may be added after award only as provided in the labor standards contract clauses (29CFR 5.5 (a) (1) (ii)).

The body of each wage determination lists the classification and wage rates that have been found to be prevailing for the cited type(s) of construction in the area covered by the wage determination. The classifications are listed in alphabetical order of "identifiers" that indicate whether the particular rate is union or non-union.

Union Identifiers

An identifier enclosed in dotted lines beginning with characters other than "SU" denotes that the union classification and rate have found to be prevailing for that classification. Example: PLUM0198-005 07/01/2011. The first four letters , PLUM, indicate the international union and the four-digit number, 0198, that follows indicates the local union number or district council number where applicable , i.e., Plumbers Local 0198. The next number, 005 in the example, is an internal number used in processing the wage determination. The date, 07/01/2011, following these characters is the effective date of the most current negotiated rate/collective bargaining agreement which would be July 1, 2011 in the above example.

Union prevailing wage rates will be updated to reflect any changes in the collective bargaining agreements governing the rates.

0000/9999: weighted union wage rates will be published annually each January.

Non-Union Identifiers

Classifications listed under an "SU" identifier were derived from survey data by computing average rates and are not union rates; however, the data used in computing these rates may include both union and non-union data. Example: SULA2004-007 5/13/2010. SU indicates the rates are not union majority rates, LA indicates the State of Louisiana; 2004 is the year of the survey; and 007 is an internal number used in producing the wage determination. A 1993 or later date, 5/13/2010, indicates the classifications and rates under that identifier were issued as a General Wage Determination on that date.

Survey wage rates will remain in effect and will not change until a new survey is conducted.

WAGE DETERMINATION APPEALS PROCESS

1.) Has there been an initial decision in the matter? This can be:

* an existing published wage determination
* a survey underlying a wage determination
* a Wage and Hour Division letter setting forth a position on a wage determination matter
* a conformance (additional classification and rate) ruling

On survey related matters, initial contact, including requests for summaries of surveys, should be with the Wage and Hour Regional Office for the area in which the survey was conducted because those Regional Offices have responsibility for the Davis-Bacon survey program. If the response from this initial contact is not satisfactory, then the process described in 2.) and 3.) should be followed.

With regard to any other matter not yet ripe for the formal process described here, initial contact should be with the Branch of Construction Wage Determinations. Write to:

Branch of Construction Wage Determinations
Wage and Hour Division
U.S. Department of Labor
200 Constitution Avenue, N.W.
Washington, DC 20210

2.) If the answer to the question in 1.) is yes, then an interested party (those affected by the action) can request review and reconsideration from the Wage and Hour Administrator (See 29 CFR Part 1.8 and 29 CFR Part 7). Write to:

Wage and Hour Administrator
U.S. Department of Labor
200 Constitution Avenue, N.W.
Washington, DC 20210

The request should be accompanied by a full statement of the interested party's position and by any information (wage payment data, project description, area practice material, etc.) that the requestor considers relevant to the issue.

3.) If the decision of the Administrator is not favorable, an interested party may appeal directly to the Administrative Review Board (formerly the Wage Appeals Board). Write to:

Administrative Review Board
U.S. Department of Labor
200 Constitution Avenue, N.W.
Washington, DC 20210

4.) All decisions by the Administrative Review Board are final.

==========

END OF GENERAL DECISION

1. ALL METAL SHALL BE POWDER COATED, COLOR BLACK BROWN RAL 8022 OR APPROVED EQUAL

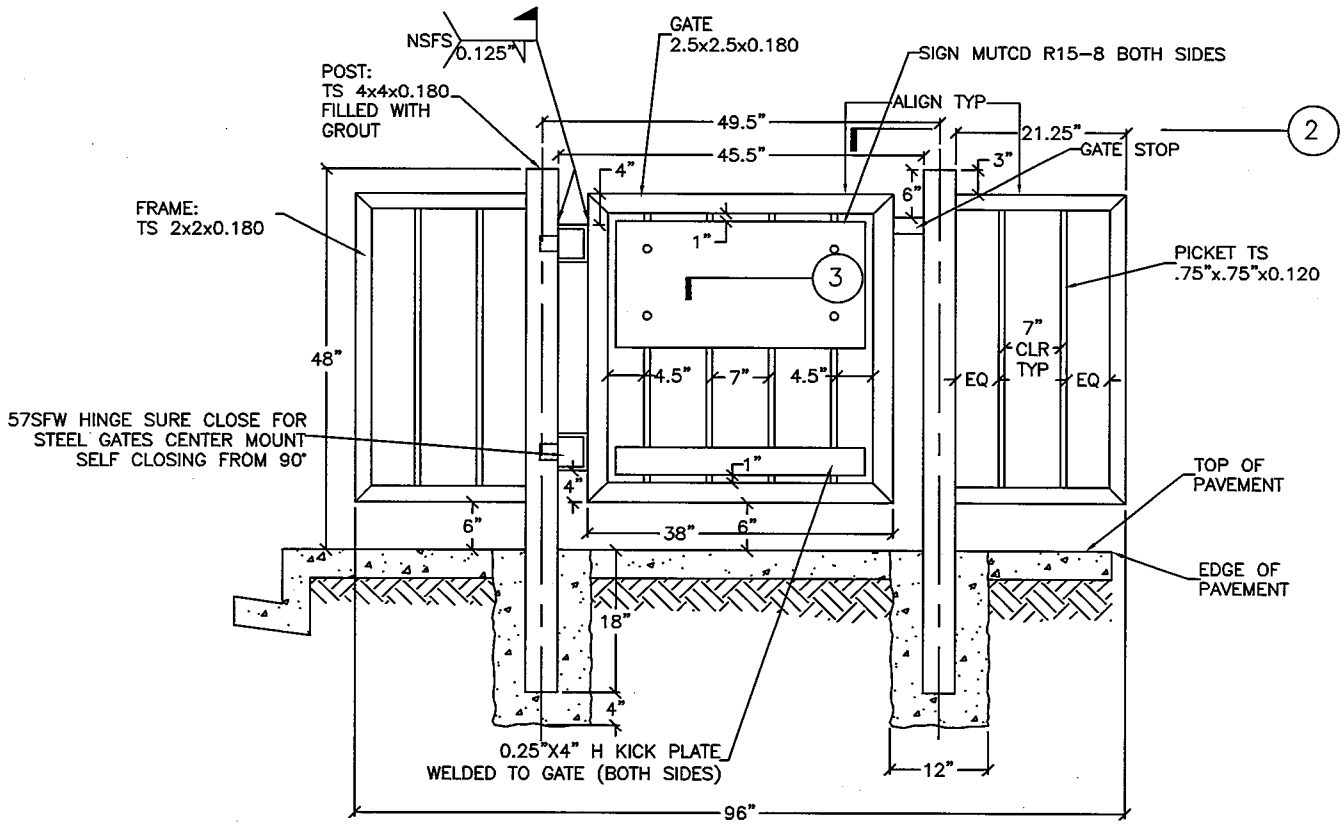

1 EXHIBIT A–
Pedestrian Swing Gate
Front View 1/2"=1'

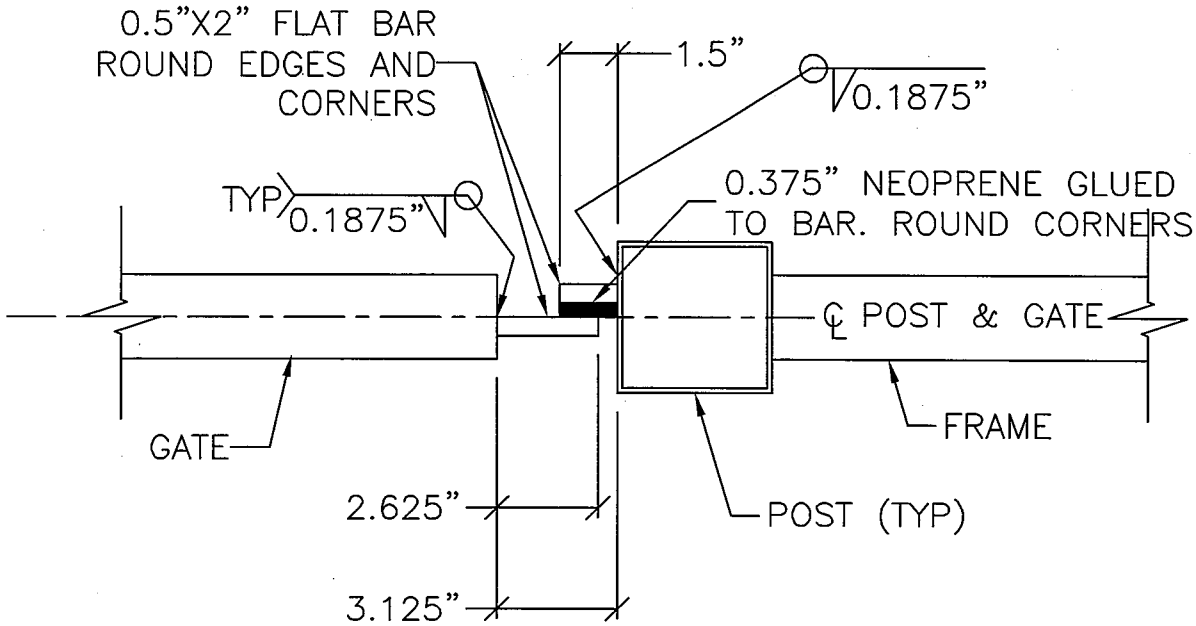

2 EXHIBIT A

Gate Stop Detail

Top View

1"=5'

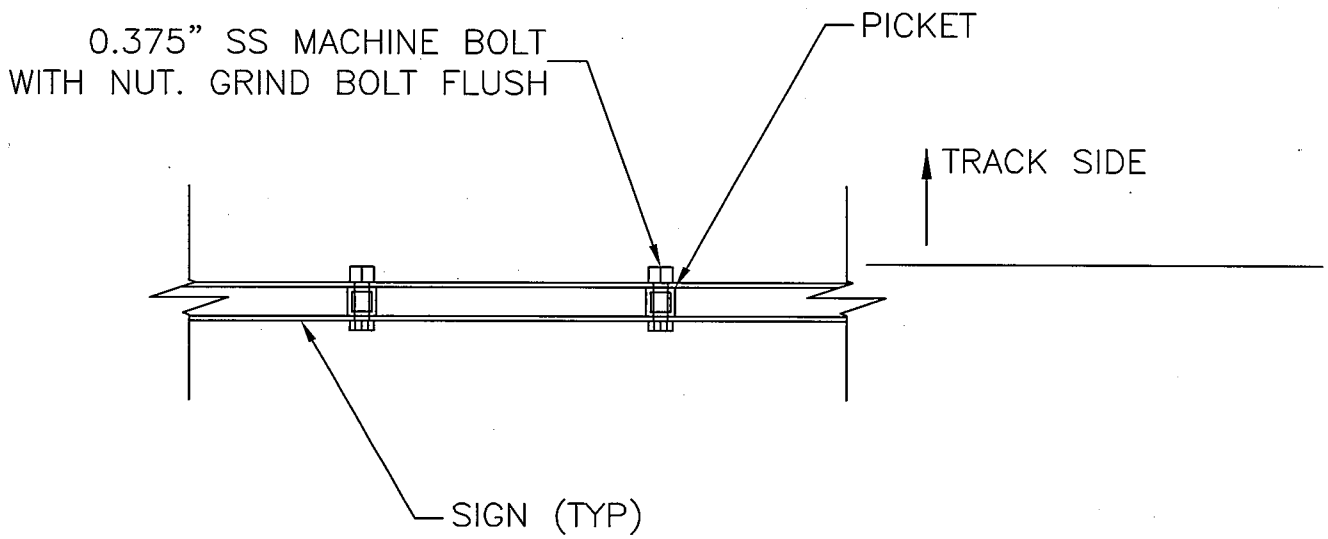

3 EXHIBIT A

Sign Mounting Detail

Top View

1"=5'