CITY OF SAN LEANDRO
STATE OF CALIFORNIA

CONTRACT BOOK

Proposal
Notice to Bidders
Agreement
Special Provisions

FOR

PUBLIC SAFETY HVAC EQUIPMENT REPLACEMENT

FOR USE WITH:

THE STANDARD SPECIFICATIONS FOR PUBLIC WORKS CONSTRUCTION, THE 2006 EDITION AND 2008 SUPPLEMENT THERETO, AMERICAN PUBLIC WORKS ASSOCIATION, SOUTHERN CALIFORNIA CHAPTER; THE STATE DEPARTMENT OF INDUSTRIAL RELATIONS GENERAL PREVAILING WAGE RATES; AND THE STATE DEPARTMENT OF TRANSPORTATION LABOR SURCHARGE AND EQUIPMENT RENTAL RATES.

PROJECT NO. 2013.0290

BID NO. 14-15.005

Engineering and Transportation Department
835 East 14th Street
San Leandro, CA 94577

Telephone: (510) 577-3428
Fax: (510) 577-3294

PROJECT ENGINEER: **MARK GORALKA, P.E.**

Kenneth Joseph, P.E., City Engineer
R.C.E. 34870 Expires 9/30/15

REGISTERED PROFESSIONAL ENGINEER
KENNETH C. JOSEPH
No. 34870
Exp. 9-30-15
CIVIL
STATE OF CALIFORNIA

BID OPENING:

11:00 AM, TUESDAY, SEPTEMBER 2, 2014

Table of Contents

PROPOSAL FORMS **3**

PROJECT LOCATION MAP **25**

NOTICE TO BIDDERS **26**

AGREEMENT **30**

SPECIAL PROVISIONS **46**

PART 1 GENERAL PROVISIONS **46**

SECTION 1 TERMS, DEFINITIONS, ABBREVIATIONS, AND SYMBOLS **46**

SECTION 2 SCOPE AND CONTROL OF THE WORK **47**

SECTION 3 CHANGES IN WORK **55**

SECTION 4 CONTROL OF MATERIALS **60**

SECTION 5 UTILITIES **62**

SECTION 6 PROSECUTION, PROGRESS, AND ACCEPTANCE OF THE WORK **63**

SECTION 7 RESPONSIBILITIES OF THE CONTRACTOR **71**

SECTION 8 FACILITIES FOR AGENCY PERSONNEL **92**

SECTION 9 MEASUREMENT AND PAYMENT **93**

PARTS 2 AND 3 CONSTRUCTION MATERIALS AND METHODS:

TECHNICAL SPECIFICATIONS **97**

ATTACHMENT A ABATEMENT SPECIFICATIONS

PROPOSAL FORM TO THE CITY OF SAN LEANDRO

Proposal Requirements

1. All bidders shall complete the "Proposal to the City of San Leandro" form contained in this Contract Book. The form consist of the following parts;

   Proposal To The City Of San Leandro

   Contract Price Schedule

   List Of Subcontractors

   Addenda Acknowledgment And Information

   Principal Persons With Interest In Proposal

   Experience And Financial Responsibility

   Eligibility Contract Statement

   Bidder Questionnaire

   National Labor Relations Board Statement

   Non-Collusion Affidavit

   Debarment And Suspension Certification

   Business License Application

   Bid Bond

   Public Contract Code Chapter 2.7 Iran Contracting Act of 2010

   This completed proposal form shall be submitted in its entirety, presented under sealed cover, shall be accompanied by a bidder's bond executed by an admitted surety insurer, naming the City of San Leandro as beneficiary.

2. The form of Bidder's Bond to be used in included with the proposal form. The bidder's bond shall be at least 10% of the bid amount. As an alternative to the Bidder's Bond, cash, cashier's check, or certified check payable to the City and in an amount equal to at least 10% of the bid amount may be used.

3. A statement of Experience and Financial Responsibility shall accompany the proposal. A form for this statement can be found as part of the Proposal to the City of San Leandro, which follows these proposal requirements.

4. If bidder is:

   A. An individual doing business in his or her own name; sign name only.

PROPOSAL FORMS

B. An individual using a firm name; sign name as an individual D.B.A. (doing business as). For example: "John Doe, an individual doing business as XYZ Company".

C. A co-partnership; sign name with title as in this example: "XYZ Co., by John Doe, Copartner." Also, provide the names of all individuals.

D. A corporation; sign name with title as in this example: "XYZ Co., by John Doe, President". Also, state legal name of corporation, names of the president, secretary, treasurer, and manager of the corporation. Affix seal of corporation.

4. The business address of the bidder must be filled in completely on the proposal, giving the address of the firm in the case of a partnership or a corporation, not the address of the partner or official signing this proposal.

5. The spaces provided on the proposal for State of California Contractor's License Number and classification must be filled in completely.

6. To assure recognition, write the words "Proposal, etc." plainly on the envelope.

7. The bidder must provide evidence of a current City of San Leandro Business License or a copy of the application for such as part of this proposal.

PROPOSAL FORMS

PROPOSAL TO THE CITY OF SAN LEANDRO

CITY OF SAN LEANDRO
STATE OF CALIFORNIA

FOR

PUBLIC SAFETY HVAC EQUIPMENT REPLACEMENT

PROJECT NO. 2013.0290

BID NO. 14-15.005

NAME OF BIDDER: _____

BUSINESS ADDRESS: _____

CITY, STATE, ZIP: _____

LICENSE NO.: _____ CLASS: _____ EXP. DATE: _____

TELEPHONE NO.: ( ) _____ FAX NO.: ( ) _____

EMAIL: _____

The work for which this proposal is submitted is for construction in accordance with the Contract Documents, including the Special Provisions of the Agreement, the project plans described below, and the Standard Specifications for Public Works Construction, 2006 edition and 2008 supplement thereto, adopted by the American Public Works Association, Southern California Chapter, and the Special Provisions (Technical Specifications) and Standard Plans thereto adopted by the City Engineer. The Contract Book shall be used in conjunction with the above documents, and the State of California Department of Transportation Labor Surcharge and Equipment Rental Rates, and the State Department of Industrial Relations General Prevailing Wage Rates current at the bid opening date.

The project plans for the work to be done are entitled "**Public Safety HVAC Equipment Replacement**," consisting of twenty three (23) sheets. Plans were approved by the **City Engineer on August 4, 2014.**

The work to be done consists of **replacing HVAC equipment and associated ductwork within the second floor mechanical room of the City Hall Public Safety Building;** and doing all appurtenant work in place and ready for use, all as shown on the plans and described in the specifications with the title indicated in the above paragraph, and on file in the office of the Engineer**.** Reference to said plans and specifications is hereby made for further particulars.

PROPOSAL FORMS

A bidder's security, in an amount and of a form described under Paragraph 1 of the Proposal Requirements section of these provisions shall accompany this proposal.

The attention of all bidders is directed to Sections 2-1 of the Special Provisions for the basis of award.

The bidder shall set forth for each item of work a unit price and a total price for the item, and for each lump sum item a total for the item, all in clearly legible figures in the respective spaces provided for this purpose. In the case of unit basis items, the amount set forth under the "Total Price" column shall be the extension of the item price bid on the basis of the estimated quantity for the item.

In case of conflict between an item price in words and the price in figures, the price in words shall prevail. In case of discrepancy between an item price and the total set forth for a unit basis item, the item price shall prevail. However, if the amount set forth as an item price is ambiguous, illegible, or uncertain for any cause, or is omitted, or is the same amount as the entry in the "Total Price" column, then the amount set forth in the "Total Price" column for the item shall prevail and shall be divided by the estimated quantity for the item and the price thus obtained shall be the item price. "Total Bid" shall be the total sum of the "Total Price" column as corrected.

The successful bidder must submit a signed agreement, all required bonds, and proof of insurance within 12 working days after the bidder has received notice from the City that the contract has been awarded. If the successful bidder fails to do so, the City may, at its option, determine that the bidder has abandoned the contract, and the bidder's bid security will be forfeit. The City may then award the contract to the next qualified bidder.

The undersigned, as bidder, declares as follows:

1. The only persons or parties interested in this proposal as principals are those named herein;
2. This proposal is made without collusion with any other person, firm or corporation;
3. We have carefully examined the location of the proposed work, the annexed proposed form of contract, and the plans therein referred to; and
4. We propose and agree, if this Proposal is accepted, that we will contract with the City of San Leandro in the form of the copy of the contract annexed hereto;
5. We will provide all necessary machinery, tools, apparatus and other means of construction;
6. We will do all the work and furnish all the materials specified in the contract, in the manner and time therein prescribed, and according to the requirements of the Engineer as therein set forth; and
7. This bid is sufficient to allow us to comply with all applicable local, state, and federal laws or regulations governing the labor or services to be provided; and
8. We will take in full payment therefore in the amounts shown on the following Contract Price Schedule, as follows:

PROPOSAL FORMS

CONTRACT PRICE SCHEDULE

BASE BID:

Item No.	Description	Estimated Quantity (A)	Unit of Measure	Item UNIT Price (in Words)	Item UNIT Price (in Figures) (B)	TOTAL PRICE (in Figures) (AxB)
1.	All work either shown on plans or required by the specifications, except that for Additive Alternate 1 below.	1	**LS**			

TOTAL BASE BID: _____
(In Words)

TOTAL BASE BID: _____
(In Figures)

ADDITIVE BID ITEM 1:

Item No.	Description	Estimated Quantity (A)	Unit of Measure	Item UNIT Price (in Words)	Item UNIT Price (in Figures) (B)	TOTAL PRICE (in Figures) (AxB)
1.	All work necessary to paint walls and ceiling, and epoxy coat floor as indicated on Sheet M-1.1 of the Contract Drawings.	1	**LS**			

TOTAL ADDITIVE BID ITEM 1: _____
(In Words)

TOTAL ADDITIVE BID ITEM 1: _____
(In Figures)

TOTAL BASE BID + ADDITIVE ALTERNATE BID ITEM 1:

_____
(In Words)

TOTAL BASE BID + ADDITIVE ALTERNATE BID ITEM 1:

_____
(In Figures)

PROPOSAL FORMS

UNITS OF MEASURE:

Abbreviation	Word or Words
LS	LUMP SUM

NOTE: All bids will be compared on the basis of the Engineer's Estimate of the quantities of the work to be done. The undersigned declares, by signing this proposal, that the bidder has carefully checked all of the above figures and understands that the City shall not be responsible for any errors or omissions on the part of the undersigned in making up this bid.

PROPOSAL FORMS

LIST OF SUBCONTRACTORS

Bidder shall complete ALL the required information and, if available, the optional information for each subcontractor, required to be listed by the provisions in Section 2-3 "Subcontracts" of the Special Provisions and the Standard Specifications, to whom the bidder proposes to subcontract portions of the work. If requested by the Engineer, all other information must be provided within 24 hours of bid opening pursuant to PCC Section 4104.

Subcontractor's Name: ***(REQUIRED)***			
Address: ***(REQUIRED)***			
Phone #:			
Fax #:			
E-Mail:			
Name of Project Mgr.:			
License and Classification:			
DOT Certified DBE:	☐ Yes ☐ NO	☐ Yes ☐ NO	☐ Yes ☐ NO
Value of Work Subcontracted:	**$**_____	**$**_____	**$**_____
Description of Portion of Work Subcontracted: ***(REQUIRED)***	_____ _____ _____	_____ _____ _____	_____ _____ _____

***NOTE:** Use additional photocopies as required.

PROPOSAL FORMS

CITY OF SAN LEANDRO LOCAL BUSINESS INCLUSION ORDINANCE

LOCAL BUSINESS PREFERENCE (PRIME CONTRACTOR)

Bidders who are defined as a San Leandro Business will be given special consideration at time of bid as defined in Section 2-1 of these specifications.

Check One

( ) By signing this proposal, bidder as prime contractor, certifies that they qualify as a San Leandro Business as defined in Section 1-6-225 of Article 2 of Chapter 1-6 of the San Leandro Municipal Code meeting all the criteria listed below. If requested by City, bidder will provide satisfactory evidence of meeting all criteria within three (3) business days from the date of the request.

San Leandro Business Criteria

All information must be valid at least six (6) months before bids opening by the City.

(i) A written agreement for City occupancy or proof of ownership of a San Leandro office;

(ii) Proof that business is transacted or revenue generated in an office located in San Leandro;

(iii) A conspicuously displayed business sign at the San Leandro business premises except where the business operates out of a residence;

(iv) Proof that the office is appropriately equipped for the type of business for which certification as a San Leandro business is sought. Where equipment, such as computer and reproduction and communications machines are typically and routinely used in a non-San Leandro location, comparable equipment shall be installed and routinely used at the San Leandro office;

(v) A valid City of San Leandro business license.

- or -

( ) Bidder is not a San Leandro Business as defined in Section 1-6-225 of Article 2 of Chapter 1-6 of the San Leandro Municipal Code.

PROPOSAL FORMS

CITY OF SAN LEANDRO LOCAL BUSINESS INCLUSION ORDINANCE

GOOD FAITH EFFORTS LOCAL BUSINESS PARTICIPATION GOAL

OUTREACH CERTIFICATION

Part I

Check the box which applies:

- □ I will have subcontractors and/or suppliers
- □ I will not have subcontractors or suppliers

Part II

If you will have subcontractors or suppliers, you must engage in good faith efforts to hire San Leandro businesses, non-profit organizations or residents to perform the contract so that the goal of at least 25% of the total contract dollar amount is spent on local businesses. Although the 25% local business participation goal is aspirational and non-binding, you must perform, and certify that you performed at least five of the following eight activities prior to submittal of your bid. Submittal of this form, and any accompanying documentation required is a material aspect of this invitation for bids, such that your bid will be considered non-responsive for failing to meet these requirements, and/or failure to execute this certification form.

(1) Attend pre-solicitation or pre-bid meetings scheduled by the City to inform all contractors, subcontractors, suppliers, and San Leandro residents of the project. ;

(2) Convene a meeting in San Leandro for San Leandro businesses, non-profit organizations, and suppliers to identify specific items of work that could be performed on the project;

(3) List all contact information for any San Leandro business that will participate in the project as a subcontractor, sub-consultant, or supplier if a contract is awarded to you;

(4) Advertise in newspapers, websites, trade association publications, or other media soliciting for subcontractors, suppliers or employment opportunities on the project not less than twenty calendar days before the date bids are due;

(5) Document personal contacts with San Leandro businesses or nonprofit organizations informing them of the opportunity to subcontract or supply to the project;

(6) Submit documentation of good faith negotiations with San Leandro businesses and nonprofit organizations for subcontracting or supplying opportunities on the project;

(7) Make the project plans and specifications available for review upon request to interested San Leandro businesses or suppliers;

(8) Document requests for assistance from San Leandro community organizations, contractors or professional groups, local, state or federal business assistance offices or other organizations that provide assistance in the recruitment of San Leandro businesses.

PROPOSAL FORMS

Part III

List below which five of the eight activities you performed. Provide all supporting statements or documentation that show or prove achievement of the activities listed below. Attach additional sheets if necessary:

_____
_____
_____
_____
_____

List below the Subcontractors, businesses, or suppliers who responded to your advertisements.
(Please attach any additional sheets if necessary)

Name	**Phone Number**
	.

Part VI

Certification

I, _____ certify that I am the bidder's Chief Executive Officer or authorized representative and that I have made a diligent effort to ascertain the facts with regard to the representations made herein. In making this certification I am aware of Section 12650 et seq. of the California Government Code providing for the imposition of treble damages for making false claims.

_____ _____
Signature of Bidder Date

End Section

PROPOSAL FORMS

ADDENDA ACKNOWLEDGMENT AND INFORMATION

The undersigned acknowledges receipt of Addendum No. _____ through _____ inclusively. A signed copy of same is attached hereto and made part of this proposal.

PRINCIPAL PERSONS WITH INTEREST IN PROPOSAL

The names of all persons interested in the foregoing proposal as principals are as follows:

IMPORTANT NOTICE: If bidder or other interested person is a corporation, state legal name of corporation, also names of the president, secretary, treasurer, and manager thereof; if a co-partnership, state true name of firm and names of all individual co-partners composing firm; if bidder or other interested person is an individual, state first and last names in full.

_____

_____

_____

_____

EXPERIENCE AND FINANCIAL RESPONSIBILITY

The bidder has been engaged in the contracting business under State License No._____ for a period of _____ years.

The bidder's three most recently completed contracts are:

1. Title of Project _____

   Owner _____

   Address _____

   Telephone No. _____

   Engineer in Charge _____

   Date Accepted _____

PROPOSAL FORMS

2. Title of Project _____

Owner _____

Address _____

Telephone No. _____

Engineer in Charge _____

Date Accepted _____

3. Title of Project _____

Owner _____

Address_____

Telephone No. _____

Engineer in Charge _____

Date Accepted _____

Reference is hereby made to the following bank or banks as to the financial responsibility of the bidder:

Name of Bank:	**Address:**
_____	_____
_____	_____

Reference is hereby made to the following surety companies as to the financial responsibility and general reliability of the bidder:

Company: _____

Address: _____

Company: _____

Address: _____

PROPOSAL FORMS

ELIGIBILITY TO CONTRACT STATEMENT

The bidder hereby declares under penalty of perjury under the laws of the State of California that the bidder has____, has not ____ been convicted by a court of competent jurisdiction within the preceding three (3) years of fraud, bribery, collusion, conspiracy, or any other act in violation of any state or federal antitrust law in connection with the bidding upon, award of, or performance of, any public works contract with any public entity, as defined in Public Contract Code Section 1100. The term "bidder" is understood to include any partner, member, officer, director, responsible managing officer, or responsible managing employee of the prime contractor or any subcontractor.

NOTE: The bidder must place a check mark after "has" or "has not" in one of the blank spaces provided. The above statement is part of the proposal. Signing this proposal on the signature portion thereof shall also constitute signature of this statement. Bidders are cautioned that making a false certification may subject the certified to criminal prosecution.

BIDDER QUESTIONNAIRE

The bidder shall complete, under penalty of perjury, the following questionnaire:

Has the bidder, any officer of the bidder, or any employee of the bidder who has a proprietary interest in the bidder, ever been disqualified, removed, or otherwise prevented from bidding on, or completing a federal, state, or local government project because of a violation of law or safety regulation?

YES _____ **NO _____**

If the answer is yes, explain the circumstances in the following space:

_____

_____

NATIONAL LABOR RELATIONS BOARD STATEMENT

The Contractor hereby states under penalty of perjury that no more than one final unappealable finding of contempt of court by a federal court has been issued against the Contractor within the immediately preceding two year period because of the Contractor's failure to comply with an order of a federal court which orders the Contractor to comply with an order of the National Labor Relations Board.

PROPOSAL FORMS

NON-COLLUSION AFFIDAVIT
TO BE EXECUTED BY BIDDER AND SUBMITTED WITH BID

PUBLIC CONTRACT CODE SECTION 7106

STATE OF CALIFORNIA)
) ss.
COUNTY OF _____)

_____, being first duly sworn, deposes and says that he or she is _____ of _____ the party making the foregoing bid that the bid is not made in the interest of, or on behalf of, any undisclosed person, partnership, company, association, organization, or corporation; that the bid is genuine and not collusive or sham; that the bidder has not directly or indirectly induced or solicited any other bidder to put in a false or sham bid, and has not directly or indirectly colluded, conspired, connived, or agreed with any bidder or anyone else to put in a sham bid, or that anyone shall refrain from bidding; that the bidder has not in any manner, directly or indirectly, sought by agreement, communication, or conference with anyone to fix the bid price of the bidder or any other bidder, or to fix any overhead, profit, or cost element of the bid price, or of that of any other bidder, or to secure any advantage against the public body awarding the contract of anyone interested in the proposed contract; that all statements contained in the bid are true; and, further, that the bidder has not, directly or indirectly, submitted its bid price or any breakdown thereof, or the contents thereof, or divulged information or data relative thereto, or paid, and will not pay, any fee to any corporation, partnership, company association, organization, bid depository, or to any member or agent thereof to effectuate a collusive or sham bid.

NOTE: The above Statement, Questionnaire, and Non-collusion Affidavit are part of the proposal. Signing this proposal on the signature portion thereof shall also constitute signature of this Statement, Questionnaire, and Non-Collusion Affidavit. Bidders are cautioned that making a false certification may subject the certifier to criminal prosecution.

PROPOSAL FORMS

DEBARMENT AND SUSPENSION CERTIFICATION

The bidder, under penalty of perjury, certifies that, except as noted below, bidder or any person associated therewith in the capacity of owner, partner, director, officer, manager (please check if applicable):

[ ] Is not currently under suspension, debarment, voluntary exclusion, or determination of ineligibility by any local, state, or federal agency;

[ ] Has not been suspended, debarred, voluntarily excluded or determined ineligible by any local, state, or federal agency within the past 3 years;

[ ] Does not have a proposed debarment pending; and

[ ] Has not been indicted, convicted, or had a civil judgment rendered against bidder by a court of competent jurisdiction in any matter involving fraud or official misconduct within the past 3 years.

If there are any exceptions to this certification, insert the exceptions in the following space:

Exceptions will not necessarily result in denial of award, but will be considered in determining bidder responsibility. For any exception noted above, indicate below to whom it applies, initiating agency, and dates of action:

NOTE: Providing false information may result in criminal prosecution. The above certification is part of the proposal. Signing this proposal on the signature portion thereof shall also constitute signature of this certification.

PROPOSAL FORMS

Iran Contracting Act of 2010

Public Contract Code Chapter 2.7

In the event that my bid or proposal is one million dollars ($1,000,000.00) or more, by my signature below I certify that this company, any parent entities, subsidiaries, successors or subunits of this company and I, personally, are not identified on a list created pursuant to subdivision (b) of Section 2203 of the California Public Contract Code as a person engaging in investment activities in Iran as described in subdivision (a) of Section 2202.5, or as a person described in subdivision (b) of Section 2202.5 of the California Public Contract Code, as applicable.

PROPOSAL FORMS

By my signature on this proposal I certify, under penalty of perjury under the laws of the State of California, that the foregoing questionnaire is true and correct. By my signature on this proposal, I further certify, under penalty of the perjury under the laws of the State of California, that the Non-Collusion Affidavit, and the Debarment and Suspension Certification are true and correct.

Date: _____ _____

(Typed or printed name)

_____

_____

Signature of Bidder

Business Address (Street Address, City, State & Zip Code):

_____

_____

Business Phone: ( ) _____ Fax No.: ( ) _____

PROPOSAL FORMS

CITY OF SAN LEANDRO BUSINESS LICENSE

In accordance with Title 2 Chapter 2 of the San Leandro Municipal Code, all contractors, including subcontractors, shall possess a current business license to perform work in San Leandro. As part of the proposal submittal, all bidders shall complete the following:

General Contractor (Bidder)

If the bidder holds a current City of San Leandro business license:

The bidder, under penalty of perjury, certifies that the bidder is in possession of a current City of San Leandro Business License.

Business Name (as shown in Business License): _____

Business License Number: _____

Or

The bidder shall submit a copy of the following attached Business License Application. If the bid is accepted, the bidder agrees to submit the original Business License Application to the Finance Department and pay all appropriate fees for the acquisition of a business license. Any questions regarding the business license application can be directed to the Finance Department at 510-577-3392 or 510-577-3468. Bidder will then submit a copy of the Business License with the executed contract documents. Failure of the successful bidder to acquire a City of San Leandro Business License within 12 working days of receiving a Notice of Award shall constitute a failure to execute the contract and the City may award the contract to a subsequent bidder in accordance with Section 2-1 of these specifications.

Subcontractor Business License

Prior to processing any progress payments, the bidder shall submit a copy of a current City of San Leandro Business License for each listed subcontractor.

PROPOSAL FORMS

CITY OF SAN LEANDRO

Finance Department
835 East 14th Street, San Leandro, California 94577
(510) 577-3468 or 577-3392

BUSINESS LICENSE APPLICATION

For Businesses Located Outside of San Leandro

Business License Fee
See Fee Schedule

PLEASE TYPE OR PRINT WITH PEN

OFFICIAL USE ONLY

Business Name _____

Business License No. _____

APN# _____

Corporate Name (if applicable) _____

Bus. Start Date _____

Business Location _____
(Cannot be P.O. Box per State of California Business & Professions Code-Section 17538.5)

❑ **New Application** ❑ **Change**

State Sales Tax No. _____

Federal ID No. _____

Mailing Address _____

State ID No. _____

State Contractor Lic. No. _____

Phone No. _____ **Alt. No.** _____ **Expire Date** _____

Description of Business _____

Ownership ❑ Corporation ❑ Corp-Ltd Liability ❑ Partnership ❑ Sole Proprietor ❑ Trust

Enter below names of Owners, Partners, or Corporate Officers (attach additional sheet, if necessary)

1st Owner Name _____ **Title** _____ **Soc. Sec. No.** _____

Home Address _____ **Home Phone No.** _____
(Cannot be P.O. Box) _____ **Cell / Pager No.** _____

2nd Owner Name _____ **Title** _____ **Soc. Sec. No.** _____

Home Address _____ **Home Phone No.** _____
(Cannot be P.O. Box) _____ **Cell / Pager No.** _____

- Is this business being conducted in your residence? ☐ Yes ☐ No

- If business is being purchased, please complete the following:

Seller's Business Name: _____ Seller's Bus. Lic. #: _____

NUMBER OF EMPLOYEES: Shall mean and include the total number of full time and part time employees engaged or to be engaged within this City in the applicant's business during the license period, whether as owner, partner, spouse or employee, and any others who may work without compensation.

*** ***PARTIAL YEAR:*** The business license fee for any business commencing after June 30th of any year shall be reduced by one-half (1/2).

CERTIFICATION AND ACKNOWLEDGEMENT

I declare under penalty of perjury that the statements made in this application are true. I further agree that business shall be conducted in accordance with the San Leandro Municipal Code. I understand that the filing of this application and payment of fees does not entitle me to commence or carry on any business in the City of San Leandro until said Business License is approved and issued. Upon issuance of a Business LIcense, it shall be my responsibility to renew the license annually by January 31st.

SIGN HERE

➔ _____
Signature of Owner or Representative

Title _____ Date _____

Base Fee (required for each license) $

Unit #_____**X $**_____ $

TOTAL AMOUNT DUE (Base Fee plus Unit Fee) $

*** 1/2 Year fee for Businesses commening after June 30th.

TOTAL AMOUNT PAID $

RETURN APPLICATION TO ABOVE ADDRESS AND MAKE CHECK PAYABLE TO CITY OF SAN LEANDRO.

Thank you for doing business in the City of San Leandro.

O:\HDLBL3x\Application_BL-Out of City Location.rpt Printed 10/12/2007: 5:04 pm

CITY OF SAN LEANDRO
STATE OF CALIFORNIA

BID BOND

KNOW ALL MEN BY THESE PRESENTS, that we _____
as Principal, and _____
as Surety, are held and firmly bound unto the **CITY OF SAN LEANDRO**, hereinafter called "City", in penal sum of ten percent (10%) OF THE TOTAL AMOUNT OF THE BID OF THE PRINCIPAL submitted to the said City for the work described below for the payment of which sum in lawful money of the United States, well and truly to be made, we bind ourselves, our heirs, executors, administrators, successors and assigns, jointly and severally, firmly by these presents.

THE CONDITION OF THIS OBLIGATION IS SUCH that whereas the Principal has submitted the accompanying Proposal dated _____, for **Public Safety HVAC Equipment Replacement, Project 2013.0290.**

NOW, THEREFORE, if the Principal shall not withdraw said proposal prior to the date and time for the opening of bids, and if the Principal is awarded the contract and shall within the period specified in the Proposal after receiving notice that the contract has been awarded and the prescribed forms are presented to Principal for signature, enter in a written contract with the City, in accordance with the Proposal as accepted, and give insurance and bond with good and sufficient surety or sureties, as may be required, for the faithful performance and proper fulfillment of such contract and for the payment for labor and materials used for the performance of the contract, or in the event of the withdrawal of said Proposal within the period specified or the failure to enter into such contract and give such City bonds, within the time specified, if the Principal shall pay the City the difference between the amount specified in said Proposal and the amount for which the City may procure the required work and/or supplies, if the latter amount be in excess of the former, together with all costs incurred by the City in again calling for bids, then the above obligation shall be void and of no effect, otherwise to remain in full force and virtue.

Surety, for value received, hereby stipulates and agrees that no change, extension of time, alteration or addition to the terms of the contract on the call for bids, or to the work to be performed there under, or the specifications accompanying the same, shall in any way affect its obligation under this bond, and it does hereby waive notice of any such change, extension of time, alteration, or addition to the terms of said contract or the call for bids, or to the work, or to the specifications.

In the event suit is brought up on this bond by the City and judgment is recovered, the Surety shall pay all costs incurred by the City in such suit, including a reasonable attorney's fee to be fixed by the court.

PROPOSAL FORMS

IN WITNESS WHEREOF, the above-bound parties have executed this instrument under their several seals this _____ day of _____, the name and corporate seals of each corporate party being hereto affixed and these presents duly signed by its undersigned representatives, pursuant to authority of its governing body.

(Corporate Seal) **Principal** _____

By _____

Title _____

(Attach Notarial Acknowledgment)

(Corporate Seal) **Surety** _____

Address _____

Phone No.: ( )_____ Fax No.: ( ) _____

By _____
Attorneys-in-Fact

Title _____

(Attach Notarial Acknowledgment)

<u>NOTE TO SURETY COMPANY</u>: There must be submitted a certified copy of unrevoked resolution of authority for the attorneys-in-fact.

END OF BID BOND

PROPOSAL FORMS

END OF

PROPOSAL TO THE CITY OF SAN LEANDRO

PROPOSAL FORMS

PROJECT LOCATION MAP

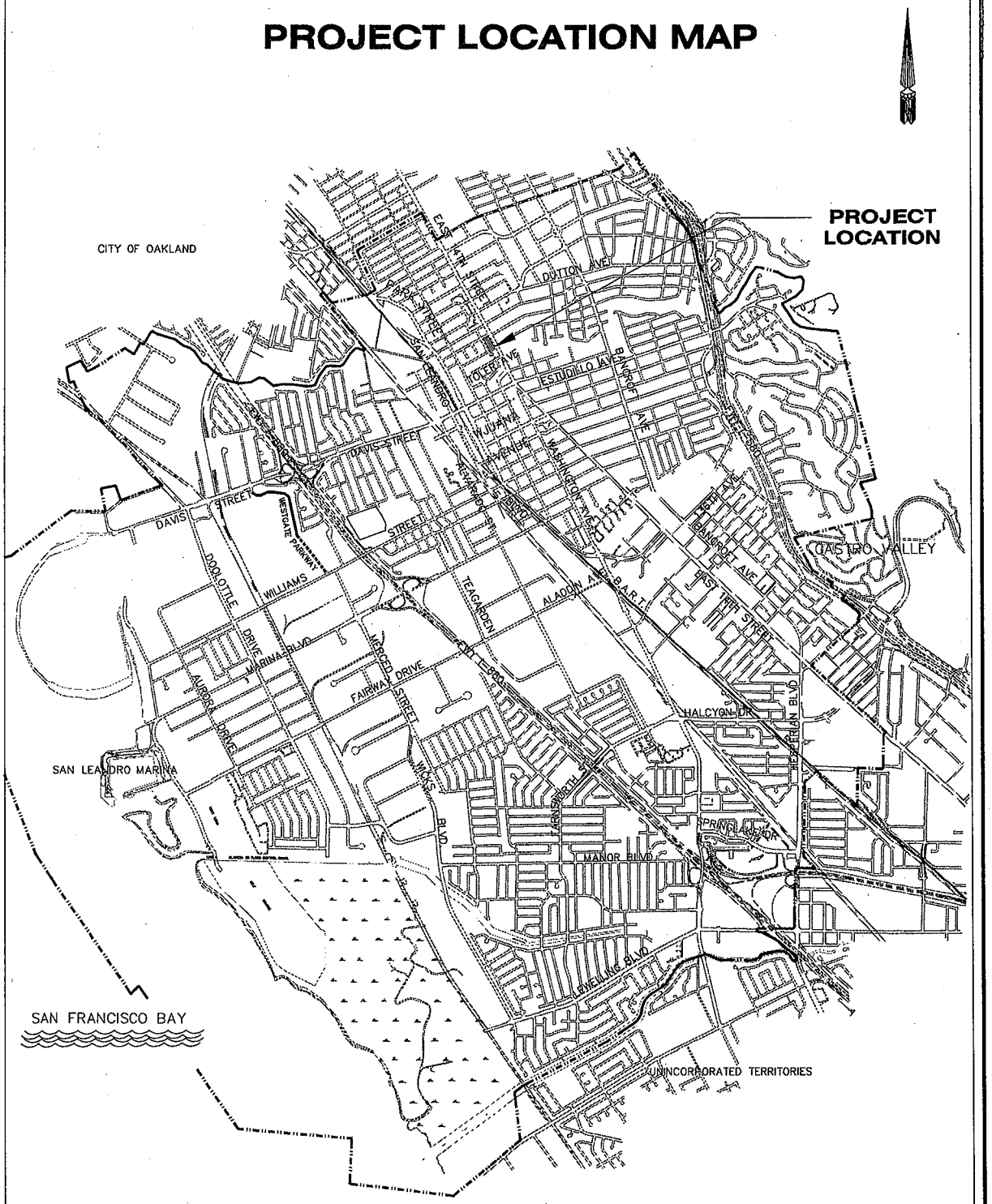

CITY OF SAN LEANDRO
STATE OF CALIFORNIA

ENGINEERING AND TRANSPORTATION DEPARTMENT

NOTICE TO BIDDERS

FOR

PUBLIC SAFETY HVAC EQUIPMENT REPLACEMENT
PROJECT NO. 2013.0290
BID NO. 14-15.005

1. BID OPENING: The bidder shall complete the "Proposal to the City of San Leandro" form contained in the Contract Book. The proposal shall be submitted in its entirety. Incomplete proposals will be considered non-responsive. Sealed bids containing the completed Proposal Section subject to the conditions named herein and in the specifications for **PUBLIC SAFETY HVAC EQUIPMENT REPLACEMENT** addressed to the **City of San Leandro** will be received at **City Hall, 835 East 14th Street, 2nd Floor San Leandro** at the office of the **City Clerk** up to **11:00 a.m.** on **Tuesday, September 2, 2014**, at which time they will be publicly opened and read.

2. BID RESULTS: A summary of the bids received will be made available, via the Internet, at:
http://www.sanleandro.org/depts/finance/purchasing/bids/default.asp.

3. WORK DESCRIPTION: The work to be done consists of **replacing HVAC equipment and associated ductwork within the second floor mechanical room of the City's Public Safety Building**, and doing all appurtenant work in place and ready for use, all as shown on the plans and described in the specifications with the title indicated in Paragraph 1 above, and on file in the office of the **Engineer.** Reference to said plans and specifications is hereby made for further particulars.

4. CONTRACTOR'S LICENSE: A Class **C-20** Contractor's License is required for this work. No bid will be accepted from a contractor who has not been licensed in accordance with Chapter 9 Division 3 of the Business and Professional Code.

5. BID DEPOSIT: A Bid Deposit equal to at least 10% of the total amount of the bid shall be placed in the sealed proposal. The Bid Deposit shall be in one of the following forms: cash, cashier's check or certified check payable to the City, or bidder's bond in favor of the City executed by an authorized surety company.

6. SAN LEANDRO BUSINESS PREFERENCE AND PARTICIPATION GOALS The bid preparation and work performed under this contract is subject to Section 1-6-225 of Article 2 of Chapter 1-6 of the San Leandro Municipal Code regarding Local Business Preference during bidding and Local Business Participation.

7. PAYMENT AND PERFORMANCE BONDS: Payment and performance guarantee bonds as set forth in Section 2-4 of the Special Provisions will be required from the successful bidder.

8. CITY'S RIGHT TO REJECT BIDS: The right is reserved, as the interest of the City may require, to reject any or all bids, or to waive any informality or minor irregularity in the bids.

9. GENERAL PREVAILING WAGE RATES: The City Council has ascertained the general prevailing rate of wages applicable to the work to be done. A tabulation of the various classifications of work persons to be employed and the prevailing rate of wages applicable thereto is on file in the **City Clerk's** office. Bidder's attention is directed to Section 7-2.2.2 of the Special Provisions.

10. **OBTAINING THE PROJECT PLANS AND CONTRACT BOOK**: The Project Plans and Contract Book may be obtained free of charge from the City's website at http://www.sanleandro.org/depts/finance/purchasing/bids. Bidders are highly encouraged to contact the City of San Leandro Engineering and Transportation Department at 510-577-3428 to be placed on the project planholder's list to receive courtesy notifications of addenda and other project information. Project addenda, if any, will be posted on the website. A bidder who fails to address all project addenda with their proposal may be deemed non-responsive.

    Bidders may also purchase Project Plans and Contract Book at the **Kiosk Counter** of the Community Development Department, City Hall, 835 East 14th Street, 1st Floor, San Leandro, **(510) 577-3423,** upon payment of a non-refundable fee of **$25.00 (payable by exact cash or check only)** for each set.

11. OBTAINING THE APWA STANDARD SPECIFICATIONS (GREEN BOOK): The APWA Standard Specifications (Greenbook) may be purchased by contacting BNI Building News, 1612 South Clementine Street, Anaheim, CA 92802, (714) 517-0970 or (888) 264-2665.

12. WITHDRAWAL OF PROPOSALS: Any bid may be withdrawn at any time prior to the time fixed in the public notice for the opening of bids only by written request for the withdrawal of the bid filed with the **City Clerk.** The request shall be executed by the bidder or its duly authorized representative. The withdrawal of a bid does not prejudice the right of the bidder to file a new bid. Whether or not bids are opened exactly at the time fixed in the public notice for opening bids, a bid will not be received after that time nor may any bid be withdrawn after the time fixed in the public notice for opening of bids.

13. RELIEF OF BIDDERS: As stated in Public Contract Code Sections 5100 to 5108, inclusive concerning relief of bidders and in particular to the requirement therein, that if the bidder claims a mistake was made in the bid presented, the bidder shall give the **City Clerk,** written notice within five (5) days after the opening of the bids of the alleged mistake, specifying in the notice in detail how the mistake occurred.

14. DISQUALIFICATION OF BIDDERS: More than one proposal from an individual, firm, partnership, corporation, or combination thereof under the same or different names will not be considered. Reasonable grounds for believing that any individual, firm, partnership, corporation, or combination thereof is interested in more than one proposal for the work contemplated may cause the rejection of all proposals in which such individual, firm, partnership, corporation, or combination thereof is interested. If there is reason for believing that collusion exists among the bidders, any or all proposals may be rejected. Proposals in which the prices obviously are unbalanced may be rejected.

15. PREVIOUS DISQUALIFICATION, REMOVAL, OR OTHER PREVENTION OF BIDDING: A bid may be rejected on the basis of a bidder, any officer of such bidder, or any employee of such bidder who has a proprietary interest in such bidder, having been disqualified, removed, or otherwise prevented from bidding on, or completing a federal, state, or local project because of a violation of any law or any safety regulation.

16. RESPONSIBILITY FOR VERIFYING CONTRACT ADDENDA: All bidders shall verify if any addenda for this project have been issued by the City of San Leandro. It is the bidders' responsibility

to ensure that all requirements of contract addenda are included in the bidder's proposal. All bidders shall include a signed copy of all contract addenda with the proposal. Failure to comply with this requirement shall cause the proposal to be considered as non-responsive and shall be grounds for rejection of the bid.

17. SITE INVESTIGATION: The bidder shall examine carefully the site of the work to verify all existing conditions. The submission of a bid shall be conclusive evidence that the bidder has investigated and is satisfied as to the conditions to be encountered, as to the character, quality, and scope of work to be performed, as to the quantities of materials to be furnished, and as to the requirements of the proposal, plans, specifications, and the contract. The bidder shall not take advantage of any apparent error or omission in the plans or specifications. In the event the bidder discovers any apparent error, discrepancy, or omission as a result of its site investigation, bidder shall immediately notify the City.

18. PRE-BID CONFERENCE: **Pre-bid conferences will be held at the project site on the following dates:**

    Friday, August 15, 2014 @ 10:00 am
    Tuesday, August 19, 2014 @ 2:00 pm
    Wednesday, August 20, 2014 @ 11:00 am

    Meeting location:
    Sisters City Gallery in City Hall located at 835 East 14th Street, San Leandro, CA
    Contact:
    Mark Goralka 510-577-3329, mgoralka@sanleandro.org

    Because of the site-specific nature of this project, attendance at one of the above pre-bid walks is highly encouraged. The City will not be accountable for any contract work related to site information not shown on the bid documents, but which would have been observable during these site walks per note 17 above.

    Questions regarding the plans and specifications may be submitted in writing to the project engineer until 5:00 p.m., five (5) days before, excluding Saturdays, Sundays and Holidays, bids are due. The City will not respond to oral questions outside of the pre-bid conference. The response, if any, will be by written addendum only. Oral responses do not constitute a revision to these plans or specifications.

19. VALUE OF WORK: The Engineer has estimated that the value of work is between $100,000 and $500,000.

20. PUBLIC CONTRACT CODE SECTION 22300: Pursuant to Public Contract Code Section 22300, for monies earned by the Contractor and withheld by the City to ensure the performance of the Contract, the Contractor, may, at its option, choose to substitute securities meeting the requirements of said Public Contract Code Section 22300.

21. CALIFORNIA LABOR CODE SECTION 6707: Pursuant to the provisions of California Labor Code Section 6707, each bid submitted in response to this Notice to Bidders shall contain, as a bid item, adequate sheeting, shoring, and bracing, or equivalent method, for the protection of life and limb in trenches and open excavation, which shall conform to applicable safety orders. By listing this sum, the bidder warrants that its action does not convey tort liability to the City or City employees, engineers, agents, or subconsultants.

22. PUBLIC CONTRACT CODE SECTION 2.7: For proposals in the amount of one million dollars ($1,000,000.00) or more, bidders are required to certify that the bidder's company, any parent entities, subsidiaries, successors or subunits of the bidder's company and the signator of the proposal, personally, are not identified on a list created pursuant to subdivision (b) of Section 2203 of the California Public Contract Code as a person engaging in investment activities in Iran as described in subdivision (a) of Section 2202.5, or as a person described in subdivision (b) of Section 2202.5 of the California Public Contract Code, as applicable.

23. BID PROTEST PROCEDURES: Any protest of the proposed award of bid to the bidder deemed the lowest responsible bidder must be submitted in writing to the City no later than 5:00 p.m. on the third (3rd) business day following the date of the bid opening.

    The initial protest must contain a complete statement of the basis for the protest.

    The protest must state the facts and refer to the specific portion of the document or the specific statute that forms the basis for the protest. The protest must include the name, address, and telephone number of the person representing the protesting party.

    The party filing the protest must concurrently transmit a copy of the initial protest to the bidder deemed the lowest responsible bidder.

    The party filing the protest must have actually submitted a bid on the project. A subcontractor of a party filing a bid on this project may not submit a Bid Protest. A party may not rely on the Bid Protest submitted by another bidder, but must timely pursue its own protest.

    The procedure and time limits set forth in this Section are mandatory and are the bidder's sole and exclusive remedy in the event of a Bid Protest. The bidder's failure to fully comply with these procedures shall constitute a waiver of any right to further pursue the Bid Protest, including filing of a challenge of the award pursuant to the California Public Contracts Code, filing of a claim pursuant to the California Government Code, or filing of any other legal proceedings.

    The City shall review all timely protests prior to formal award of the bid. The City shall not be required to hold an administrative hearing to consider a timely protest, but may do so at the option of the Engineer, or if otherwise legally required. At the time of the City Council's consideration of the award of the bid, the City Council shall also consider the merits of any timely protests and the Engineer's recommendation thereon. The City Council may either accept the protest and award the bid to the next lowest responsible bidder, or reject the protest and award to the lowest responsible bidder. Nothing in this section shall be construed as a waiver of the City Council's right to reject all bids.

    The City reserves the right to waive any bid irregularities not affecting the amount of the bid, except where such waiver would give the low bidder an advantage or benefit not allowed other bidders.

Dated: August 1, 2014

Marian Handa
City Clerk

CITY OF SAN LEANDRO
STATE OF CALIFORNIA

AGREEMENT

THIS AGREEMENT is made at San Leandro, California, as of _____ _____, by and between _____, hereinafter called Contractor, and the **CITY OF SAN LEANDRO**, a municipal corporation, hereinafter called City, who agree as follows:

Recitals

The City has awarded a contract to the Contractor for performing the work hereinafter mentioned in accordance with the sealed proposal of said Contractor and of proceedings had and taken by the City Council of the City leading up thereto:

1. WORK TO BE DONE: The work to be done consists of replacing HVAC equipment and associated ductwork within the second floor mechanical room of the City's Public Safety Building, and doing all appurtenant work in place and ready for use, all as shown in the plans and described in the specifications entitled **"Public Safety HVAC Equipment Replacement"** now on file in the office of the **Engineer** of said City.

2. TIME OF PERFORMANCE: The work under this contract shall commence and be completed in accordance with the times therefore prescribed in the specifications for said work.

3. PAYMENT: The City will pay the Contractor for the performance of said work the prices as stated in the Contract Price Schedule, and at the times and in the manner prescribed in the specifications.

4. COMPONENT PARTS: This Agreement shall consist of the following documents, each of which is on file in the office of the **Engineer** of said City, and all of which are incorporated herein and made a part hereof by reference thereto:

A. This Agreement and Contract Price Schedule
B. Notice to Bidders
C. Proposal Requirements
D. Resolution Approving Plans and Specifications and Calling for Bids
E. Accepted Proposal
F. Special Provisions
G. Plans
H. Standard Specifications
I. Faithful Performance Bond
J. Payment Bond
K. Maintenance Bond
L. Project Addenda, if any

5. WAGE SCALE: Reference is hereby made to the General Wage Determination made by the Director of Industrial Relations and adopted by Resolution No. 77-236 of the City Council. Reference thereto is further made in the instructions and information to bidders. The provisions of the General Wage Determination made by the Director of Industrial Relations and Resolution No. 77-236 are hereby specified as the rate of prevailing wages to be paid workers on this project. For purposes of Labor Code section 1781, this project is a "public work" to which Labor Code section 1771 applies, and the Contractor and all listed or unlisted subcontractors must perform the work as a "public work." The Contractor has the responsibility for determining what is required to comply with its obligations under Labor Code section 1771. Any decision by the Contractor or any listed or unlisted subcontractor not to comply with Labor Code section 1771 is at the Contractor's or subcontractor's sole risk.

6. LABOR CODE COMPLIANCE: Contractor indemnifies and holds harmless the City, its officers, officials, and employees, from and against claims, liability, and damages arising from any alleged violation of the California Labor Code asserted against the City due to the alleged acts or omissions of the Contractor or any listed or unlisted subcontractor used on the project.

7. CLAIMS: The City has the full authority to compromise or settle any claim relating to this project. The City will timely notify the Contractor if the City receives any third-party claim relating to this project.

IN WITNESS WHEREOF, City has caused these presents to be executed by its officers, thereunto duly authorized and Contractor has subscribed same, all on the day and year first above written.

CITY OF SAN LEANDRO
A Municipal Corporation

By:_____
Chris Zapata, City Manager

Date: _____

Attest:_____
Marian Handa, City Clerk

(NAME OF CONTRACTOR)
Contractor

By:_____

By:_____

Date:_____

APPROVED AS TO FORM:

_____
Richard Pio Roda, City Attorney

_____
David Baum, Finance Director

Account No.(s) 687-18-136-5240

ACKNOWLEDGMENT

State of California
County of Alameda)

On _____, before me, _____, who proved to me on the basis of satisfactory evidence to be the person(s) whose name(s) is/are subscribed to the within instrument and acknowledged to me that he/she/they executed the same in his/her/their authorized capacity(ies), and that by his/her/their signature(s) on the instrument the person(s), or the entity upon behalf of which the person(s) acted, executed the instrument.

I certify under PENALTY OF PERJURY under the laws of the State of California that the foregoing paragraph is true and correct.

WITNESS my hand and official seal.

Signature_____ (Seal)

CONTRACT PRICE SCHEDULE

BASE BID:

Item No.	Description	Estimated Quantity (A)	Unit of Measure	Item UNIT Price (in Words)	Item UNIT Price (in Figures) (B)	TOTAL PRICE (in Figures) (AxB)
1.	All work either shown on plans or required by the specifications, except that for Additive Alternate 1 below.	1	**LS**			

TOTAL BASE BID: _____
(In Words)

TOTAL BASE BID: _____
(In Figures)

ADDITIVE BID ITEM 1:

Item No.	Description	Estimated Quantity (A)	Unit of Measure	Item UNIT Price (in Words)	Item UNIT Price (in Figures) (B)	TOTAL PRICE (in Figures) (AxB)
1.	All work necessary to paint walls and ceiling, and epoxy coat floor as indicated on Sheet M-1.1 of the Contract Drawings.	1	**LS**			

TOTAL ADDITIVE BID ITEM 1: _____
(In Words)

TOTAL ADDITIVE BID ITEM 1: _____
(In Figures)

TOTAL BASE BID + ADDITIVE ALTERNATE BID ITEM 1:

_____
(In Words)

TOTAL BASE BID + ADDITIVE ALTERNATE BID ITEM 1:

_____
(In Figures)

UNITS OF MEASURE:

Abbreviation	Word or Words
LS	Lump Sum

NOTE: All bids will be compared on the basis of the Engineer's Estimate of the quantities of the work to be done. The undersigned declares, by signing this proposal, that the bidder has carefully checked all of the above figures and understands that the City shall not be responsible for any errors or omissions on the part of the undersigned in making up this bid.

WORKERS' COMPENSATION INSURANCE CERTIFICATION

Pursuant to Section 7-4 of the Standard Specifications, the Contractor certifies as follows:

I am aware of the provisions of Section 3700 of the Labor Code which require every employer to be insured against liability for worker's compensation or to undertake self-insurance in accordance with the provisions of that code, and I will comply with such provisions before commencing the performance of the work of this contract.

Signed: _____ Date: _____

_____
(Typed or Printed Name)

Business Address (Street Address, City, State & Zip Code):

_____

_____

_____

Business Phone: ( ) _____

CITY OF SAN LEANDRO
STATE OF CALIFORNIA

PERFORMANCE BOND

KNOW ALL MEN BY THESE PRESENTS:

WHEREAS, the **City of San Leandro,** State of California, has awarded to **_____**, hereinafter designated as the "Principal," a contract for **Public Safety HVAC Equipment Replacement, Project No. 2013.0290;** and,

WHEREAS, said Principal is required under the terms of said contract to furnish a bond for the faithful performance of said contract.

NOW, THEREFORE, we the Principal, and **_____** as Surety, are held and firmly bound unto the City of San Leandro in the penal sum of **_____ ($_____)**, lawful money of the United States for the payment of which sum well and truly to be made, we bind ourselves, our heirs, executors, administrators, successors, or assigns jointly and severally, firmly by these presents.

THE CONDITION OF THIS OBLIGATION IS SUCH, that if the above bounden Principal, or Principal's heirs, executors, administrators, successors, or assigns, shall in all things stand to and abide by, and well and truly keep and perform the covenants, conditions, and agreements in said contract and any alteration thereof made as therein provided, on the Principal's part, to be kept and performed at the time and in the manner therein specified and in all respects according to their true intent and meaning; and shall defend, indemnify and save harmless the City of San Leandro, its officers and agents as therein stipulated, then this obligation shall become null and void; otherwise it shall be and remain in full force and virtue.

And the Surety, for value received hereby stipulates and agrees that, in accordance with the Plans, Standard Specifications, Special Provisions, and other contract documents, no change, extension of time, alteration, or addition to the terms of the contract, or to the work to be performed hereunder, or to the specifications accompanying the same shall in anywise affect its obligations on this bond, and it does hereby waive notice of any such change, extension of time, alteration of additions to the terms of the Contract to the work, or to the specifications.

The City reserves the right to refuse use of any Contractor assigned by any surety to complete the work.

IN WITNESS WHEREOF, the above-bound parties have executed this instrument under their seals this_____day of _____, the name and corporate seals of each corporate party being hereto affixed and these presents duly signed by its undersigned representative, pursuant to authority of its governing body.

(Corporate Seal) **Principal** _____

By _____

Title _____

(Attach Notarial Acknowledgment)

(Corporate Seal) **Surety** _____

Address _____

Phone No.: ( )_____ Fax No.: ( ) _____

By _____
Attorneys-in-Fact

Title _____

(Attach Notarial Acknowledgment)

<u>NOTE TO SURETY COMPANY</u>: There must be submitted a certified copy of unrevoked resolution of authority for the attorneys-in-fact.

(Seal) **Witness** _____

Approved as to form:

_____
Risk Manager

END OF PERFORMANCE BOND

CITY OF SAN LEANDRO
STATE OF CALIFORNIA

PAYMENT BOND

KNOW ALL MEN BY THESE PRESENTS:

WHEREAS, the **City of San Leandro**, a municipal corporation, has awarded to **_____**, hereinafter designated as the "Principal", a contract for **Public Safety HVAC Equipment Replacement, Project No. 2013.0290**; and

WHEREAS, said Principal is required to furnish a bond in connection with said contract, to secure payment of claims of laborers, mechanics, or materialmen employed on work under said contract, as provided by law.

NOW, THEREFORE, we the undersigned Principal and Surety are held and firmly bound unto the City of San Leandro in the sum of **_____ ($_____),** said sum being equal to the estimated amount payable by said City of San Leandro under the terms of the contract, for which payment well and truly to be made, we bind ourselves, our heirs, executors, administrators, successors, or assigns jointly and severally, firmly by these presents.

THE CONDITIONS OF THIS OBLIGATION ARE SUCH that if said Principal, or Principal's heirs, executors, administrators, successors, or assigns, or subcontractors shall fail to pay for any material, provisions, provender, or other supplies, implements, or machinery used in, upon, for or about the performance of the work contracted to be done, or for any work or labor thereon of any kind, or for amounts due under the Unemployment Insurance Code with respect to such work or labor, or for any amounts required to be deducted, withheld, and paid over to the Franchise Tax Board from these wages of employees of the Contractor and Contractor's subcontractors pursuant to the Revenue and Taxation Code, with respect to such work and labor, the Surety or Sureties hereon will pay for the same in an amount not exceeding the sum specified in this bond, otherwise the above obligation shall be void. In case suit is brought upon this bond, said Surety will pay a reasonable attorney's fee to be fixed by the court.

This bond shall inure to the benefit of any and all persons, companies, and corporations entitled to file claims under Section 3138 of the Civil Code of the State of California so as to give a right of action to them or their assigns in any suit brought upon this bond.

Said Surety, for value received, hereby stipulates and agrees that, in accordance with the Plans, Standard Specifications, Special Provisions, and other Contract Documents, no change, extension of time, alteration or addition to the terms of the contract, or to the work to be performed there under, or to the specifications accompanying the same, shall in anywise affect its obligations on this bond, and it does hereby waive notice of any such change, extension of time, alteration or addition to the terms of the contract, or to the work, or to the specifications.

IN WITNESS WHEREOF, the above-bound parties have executed this instrument under their seals this_____day of _____, the name and corporate seals of each corporate party being hereto affixed and these presents duly signed by its undersigned representative, pursuant to authority of its governing body.

(Corporate Seal) **Principal** _____

By _____

Title _____

(Attach Notarial Acknowledgment)

(Corporate Seal) **Surety** _____

Address _____

Phone No.: ( )_____ Fax No.: ( ) _____

By _____
Attorneys-in-Fact

Title _____

(Attach Notarial Acknowledgment)

<u>NOTE TO SURETY COMPANY</u>: There must be submitted a certified copy of unrevoked resolution of authority for the attorneys-in-fact.

(Seal) **Witness** _____

Approved as to form:

_____
Risk Manager

END OF PAYMENT BOND

CITY OF SAN LEANDRO
STATE OF CALIFORNIA

ESCROW FOR SECURITY DEPOSIT

IN LIEU OF RETENTION

This Escrow Agreement is made and entered into by and between the **City of San Leandro**, whose address is 835 East 14th Street, San Leandro, CA, 94577, hereinafter called "City",_____, whose address is _____, hereinafter called "Contractor", and _____, whose address is _____, hereinafter called "Escrow Agent."

For the consideration hereinafter set forth, the City, Contractor, and Escrow Agent agree as follows:

1. Pursuant to Section 22300 of the Public Contract Code of the State of California, Contractor has the option to deposit securities with Escrow Agent as a substitute for retention earnings required to be withheld by City pursuant to the construction contract entered into between the City and Contractor for **Public Safety HVAC Equipment Replacement, Project No. 2013.0290** in the amount of _____ dated _____ (hereinafter referred to as the "Contract"). Alternatively, on written request of the Contractor, the City shall make payments of the retention earnings directly to the Escrow Agent. When Contractor deposits the securities as substitute for Contract earnings, the Escrow Agent shall notify the City within 10 days of the deposit. The market value of the securities at the time of the substitution shall be at least equal to the cash amount then required to be withheld as retention under the terms of the Contract amount between the City and Contractor. Securities shall be held in the name of _____, and shall designate the Contractor as the beneficial owner.

   The Contractor shall select and initial one of the following options:

2. [ ] The City shall make progress payments to the Contractor for such funds that otherwise would be withheld from progress payments pursuant to the Contract provisions, provided that the Escrow Agent holds securities in the form and amount specified above,

OR

3. [ ] The City shall make payment of retentions earned directly to the Escrow Agent. The Escrow Agent shall hold them for the benefit of the Contractor until such time as the escrow created under this Contract is terminated. The Contractor may direct the investments of the payments into securities. All terms and conditions of this agreement and the rights and responsibilities of the parties shall be equally applicable and binding when the City pays the Escrow Agent directly.

4. Contractor shall be responsible for paying all fees for the expenses incurred by Escrow Agent in administering the Escrow Account and all expenses of the City. These expenses and payment terms shall be determined by the City, Contractor, and Escrow Agent.

5. The interest earned on the securities or the money market accounts held in escrow and all interest earned shall be for the sole use of the Contractor and shall be subject to withdrawal by Contractor at any time and from time to time without notice to the City.

6. Contractor shall have the right to withdraw all or any part of the principal in the escrow account only by written notice to Escrow Agent accompanied by written authorization from City to the Escrow Agent that City consents to the withdrawal of the amount sought to be withdrawn by Contractor.

7. The City shall have a right to draw upon the securities in the event of default by the Contractor. Upon seven day's written notice to the Escrow Agent from the City of the default, the Escrow Agent shall immediately convert the securities to cash and shall distribute the cash as instructed by the City.

8. Upon receipt of written notification from the City certifying that the Contract is final and complete, and that the Contractor has complied with all requirements and procedures applicable to the Contract, Escrow Agent shall release to Contractor all securities and interest on deposit less escrow fees and charges of the escrow account. The escrow shall be closed immediately upon disbursement of all monies and securities on deposit and payments of fees and charges.

9. Escrow Agent shall rely on the written notifications from the City and the Contractor pursuant to Sections (5) to (8) inclusive, of this agreement and the City and Contractor shall hold Escrow Agent harmless from Escrow Agent's release and disbursement of the securities and interest as set forth above.

10. Contractor authorizes the Escrow Agent to issue monthly statements of the status of the funds held in the escrow account to the City. Escrow Agent shall issue said statements on a monthly basis and mail to: City of San Leandro, ATTN: Finance Department, 835 East 14th Street, San Leandro, CA 94577.

11. The names of the persons who are authorized to give written notice or to receive written notice on behalf of the City and on behalf of Contractor in connection with the foregoing, and exemplars of their respective signatures, are as follows:

On behalf of City:

_____
Title

_____
Name

On behalf of Contractor:

_____
Title

_____
Name

On behalf of Escrow Agent:

_____
Title

_____
Name

_____
Signature

_____
Address

At the time the escrow account is opened, the City and Contractor shall deliver to the Escrow Agent a fully executed counterpart of this agreement.

IN WITNESS WHEREOF, the parties have executed this agreement by their proper officers on the date first set forth above.

City:	**Contractor:**
_____	_____
Title	Title
_____	_____
Name	Name
_____	_____
Signature	Signature
_____	_____
Address	Address

END OF ESCROW FOR SECURITY DEPOSIT
IN LIEU OF RETENTION

CITY OF SAN LEANDRO
STATE OF CALIFORNIA

MAINTENANCE BOND

KNOW ALL MEN BY THESE PRESENTS:

WHEREAS, the **City of San Leandro,** State of California, has awarded to _____, hereinafter designated as the "Principal," a contract for **Public Safety HVAC Equipment Replacement, Project No. 2013.0290;** and

Whereas, said Principal is required under the terms of said contract to furnish a bond for the correction of any defects due to defective materials or workmanship in the work performed under said contract.

NOW, THEREFORE, we the Principal, and _____ as Surety, are held and firmly bound unto the City of San Leandro in the penal sum of _____ **($_____),** lawful money of the United States for the payment of which sum well and truly to be made, we bind ourselves, our heirs, executors, administrators, successors, or assigns jointly and severally, firmly by these presents.

THE CONDITION OF THIS OBLIGATION IS SUCH that if, during a maintenance period of one (1) year from the date of recordation of the Notice of Completion by the City, the Contractor upon receiving written notice of a need for repairs which are directly attributable to defective materials or workmanship, shall diligently take the necessary steps to correct said defects within seven (7) days from the date of said notice, then this obligation shall be null and void; otherwise it shall remain in full force and effect.

If any action shall be brought by City upon this bond, a reasonable attorney's fee, to be fixed by the court, shall be and become a part of City's judgment in any such action.

No right of action shall accrue on this bond to, or for the use of, any person or corporation other than the City named herein or the heirs, executors, administrator, or successor of the City.

IN WITNESS WHEREOF, the above-bound parties have executed this instrument under their seals this_____day of _____, the name and corporate seals of each corporate party being hereto affixed and these presents duly signed by its undersigned representative, pursuant to authority of its governing body.

(Corporate Seal) **Principal** _____

By _____

Title _____

(Attach Notarial Acknowledgment)

(Corporate Seal) **Surety** _____

Address _____

Phone No.: ( )_____ Fax No.: ( ) _____

By _____
Attorneys-in-Fact

Title _____

(Attach Notarial Acknowledgment)

<u>NOTE TO SURETY COMPANY</u>: There must be submitted a certified copy of unrevoked resolution of authority for the attorneys-in-fact.

(Seal) **Witness** _____

Approved as to form:

_____
Risk Manager

END OF MAINTENANCE BOND

SPECIAL PROVISIONS

PART 1 - GENERAL PROVISIONS

Part 1 of the Special Provisions shall conform to Part 1 of the Standard Specifications except as modified herein.

SECTION 1 - TERMS, DEFINITIONS, ABBREVIATIONS, AND SYMBOLS

The Contractor's attention is directed to Section 1, "Terms, Definitions, Abbreviation, And Symbols", of the Standard Specifications.

1-2 Definitions
1-3 Abbreviations

1-2 DEFINITIONS The following paragraphs are added to Section 1-2 of the Standard Specifications:

Whenever the following terms are used in the Standard Specifications, Plans, Special Provisions, or other contract documents, the intent and meaning shall be interpreted as follows:

Agency: The City of San Leandro.

Board: The City Council of the City of San Leandro.

City: The City of San Leandro.

Contractor: Signatory to agreement contained herein.

Engineer: The City Engineer of the City of San Leandro, State of California, acting either directly or through properly authorized agents, such agents acting within the scope of the particular duties entrusted to them.

Laboratory: Laboratories approved and authorized by the Engineer to test materials and work involved in the contract.

Standard Specifications: The Standard Specifications for Public Works Construction, 2006 edition and 2008 supplement thereto, American Public Works Association, Southern California Chapter; and and the Special Provisions (Technical Specifications) and Standard Plans thereto adopted by the City Engineer, the State Department of Industrial Relations general prevailing wage rates; and the State Department of Transportation labor surcharge and equipment rental rates.

Special Provisions: Any provisions that supplement or modify the Standard Specifications, including technical specifications covering construction materials and methods. The State Department of Transportation publication entitled "Labor Surcharge And Equipment Rental Rates" and the State Department of Industrial Relations General Prevailing Wage Rates are to be considered as a part of the Special Provisions.

1-3 ABBREVIATIONS The following definitions are added to Section 1-3 of the Standard Specifications:

Abbreviation	Word or Words
AB or CAB	**Aggregate Base Rock or Crushed Aggregate Base**
ASB or CMB	**Aggregate Subbase Rock or Crushed Miscellaneous Base**
MO	**Months**
TN	**Tons (2,000 lbs./907.2 kgs.)**

SECTION 2 - SCOPE AND CONTROL OF THE WORK

The scope and control of work shall be governed by the provisions in Section 2, "Scope and Control of the Work", of the Standard Specifications, except as modified herein.

2-1	Award Of Contract
2-3	Subcontracts
2-3.1	General
2-3.2	Additional Responsibility
2-4	Contract Bonds
2-5	Plans And Specifications
2-5.1	General
2-5.3	Submittals
2-5.3.1	General
2-5.3.2	Working Drawings
2-5.3.3	Shop Drawings
2-5.3.4	Supporting Information
2-6	Work To Be Done
2-9	Surveying
2-9.2	Construction Staking Request Form
2-11	Inspection
2-11.1	Quality Control
2-11.2	Re-Inspection

2-1 AWARD OF CONTRACT Section 2-1 of the Standard Specifications is replaced with the following:

BASIS OF AWARD: The award of the contract, if awarded, will be made within 90 days after the opening of bids to the lowest responsible bidder whose proposal complies with all the contract requirements, based on the corrected "Total Bid" sum of the corrected extension(s) of the bid item(s) in "Total Price" column, per the "Proposal to the City of San Leandro". The right is reserved to reject any and all proposals.

Local Business Preference

(1) Solely for the purpose of calculating the lowest bid, a sum equal to ten percent (10%) of the "Total Bid", or of the base bid and each alternate, shall be deducted from the amount of the "Total Bid", or the base bid and each alternate, respectively, up to a maximum of $50,000 of a bid submitted by a San Leandro business as that term is defined in Section 1-6-225 of the San Leandro Municipal Code..

If, after performing the above calculation there is a tie for the lowest bid the bidder whose principal place of business is located within the City of San Leandro shall be deemed the lowest bid subject to the qualifications concerning responsibility, as required by law. If the tie bidders both have as their principal places of business the City of San Leandro, then the City Council shall draw lots to determine to whom to award the contract.

(2) Solely for the purpose of calculating the lowest bid a sum equal to five percent (5%) of the "Total Bid", or of the base bid and each alternate, shall be deducted from the amount of the "Total Bid", or the base bid and each alternate, respectively, up to a maximum of $50,000 of a bid submitted by a joint venture wherein one of the joint venturers is a business that has as its principal place of business, its headquarters, or a significant portion of its operations within the City of San Leandro.

The periods of time specified above within which the award of contract may be made shall be subject to extension for such further period as may be agreed upon in writing between the Engineer and the bidder concerned.

All bids will be compared on the basis of the Engineer's Estimate of the quantities of work to be done. The Engineer's Estimate of construction quantities are approximate only, being given as a basis for the comparison of bids. The City does not expressly nor by implication agree that the actual amount of work will correspond therewith, and reserves the right to change the amount of any class or portion of the work or to omit portions of the work as may be deemed necessary or expedient by the Engineer in accordance with Section 3-2 of the Standard Specifications.

2-3 SUBCONTRACTS

2-3.1 GENERAL The following information is added to Section 2-3.1 of the Standard Specifications:

Contractor shall provide all REQUIRED information, as requested, on the "List of Subcontractors", which is included in the proposal. If requested by the Engineer, all other information must be provided within 24 hours of bid opening, pursuant to Public Contracts Code Section 4104.

2-3.2 ADDITIONAL RESPONSIBILITY The following information is added to Section 2-3.2 of the Standard Specifications:

The City hereby designates the following items as "Specialty Items" for computing the amount of work required by the Contractor pursuant to Section 2-3.2 of the Standard Specifications:

Bid Item No.	Description
	none

2-4 CONTRACT BONDS The following information is added to Section 2-4 of the Standard Specifications:

PAYMENT BOND AND PERFORMANCE BOND: The forms for the Payment Bond and Performance Bond can be found within these contract documents. Only said bond forms provided by the City shall be acceptable.

MAINTENANCE BOND: A Maintenance Bond shall be delivered to the City prior to the City's acceptance of the work. The bond shall be executed by a surety company or companies satisfactory to the City in the amount of ten percent (10%) of the contract price, or $1,000.00, whichever is greater. The bond shall remain in force for the duration of the 1-year guarantee period. The Maintenance Bond must be in substantially the same form as set forth in these contract documents.

2-5 PLANS AND SPECIFICATIONS The following is added to Section 2-5 of the Standard Specifications:

The work embraced herein shall be performed in accordance with the Standard Specifications for Public Works Construction, the 2006 edition and 2008 supplement thereto, American Public Works Association, Southern California Chapter; and Sections 82, 84, 85, and 86 of the May 2006 edition of the California Department of Transportation (CALTRANS) Standard Specifications and the Special Provisions (Technical Specifications) and Standard Plans thereto adopted by the City Engineer, the State Department of Industrial Relations General Prevailing Wage Rates; and the State Department of Transportation Labor Surcharge and Equipment Rental Rates, and these Special Provisions and the Contract Documents.

The Contractor shall not take advantage of any apparent error or omission in the contract documents. In the event Contractor discovers any apparent error, discrepancy or omission, Contractor shall immediately call upon the Engineer to make a determination and decision on the matter.

Should any discrepancy appear, or misunderstandings arise with respect to any issue described in the contract documents, the explanation of the Engineer in relation thereto shall prevail.

In addition to the drawings incorporated with or referred to in these contract documents, the Engineer shall, from time to time during the progress of the work, furnish such additional drawings and reference specifications as may be necessary to clarify or define the intent of the contract documents in greater detail. The Contractor shall make the work conform to all such drawings and reference materials.

The plans for this project shall be as follows:

Title	**Sheet No.**	**Sheet Name**	**Drawing No.**	**Case No.**
Title	1	G-0.0	3829	901
Mechanical Cover Sheet	2	M-0.0	3830	901
Mechanical Symbols and Abbreviations	3	M-0.1	3831	901
Mechanical Title 24	4	M-0.2	3832	901
Mechanical Title 24	5	M-0.3	3833	901
Mechanical Partial 2nd Floor Plan – Demo	6	MD-1.1	3835	901
Mechanical Partial 2nd Floor Plan	7	M-1.1	3834	901
Mechanical Section Views – Demo	8	MD-3.1	3836	901
Mechanical Section Views - New	9	M-3.1	3937	901
Mechanical Section Views- New	10	M-3.2	3838	901
Mechanical Details	11	M-5.1	3839	901
Mechanical Details	12	M-5.2	3840	901
Mechanical Details	13	M-5.3	3841	901
Mechanical Schedules	14	M-6.1	3842	901
Electrical Notes, Symbols and Abbreviations	15	E-0.0	3843	901
Electrical Title 24	16	E-0.1	3844	901
Electrical Partial First Floor Plan	17	E-1.0	3845	901
Electrical Partial 2nd Floor Plan – Demo	18	ED-1.1	3846	901
Electrical Partial 2nd Floor Plan	19	E-1.1	3847	901
Electrical Details	20	E-5.1	3848	901
Electrical Details	21	E-5.2	3849	901
Electrical Single Line Diagram	22	E-7.1	3850	901
Structural Partial 2nd Floor Plan and Details	23	S-1.0	3851	901

2-5.1 GENERAL The following is added to section 2-5.1 of the Standard Specifications:

The Contractor shall submit a request for information (RFI) to the Engineer whenever the intent of the contract documents is ambiguous or unclear. RFI's shall be in writing and shall be numbered sequentially. RFI's shall include references to relevant details, specification sections, and plan sheets so that the question may be easily understood. Responses to RFI's shall be considered amendments to the contract documents, and the work shall be constructed in accordance with the responses. The response to an RFI does not indicate or authorize extra work or authorize additional compensation. The Contractor must follow the procedures of Section 3 if additional compensation is desired.

2-5.3 SUBMITTALS The following is added to Section 2-5.3 of the Standard Specifications:

Submittals shall consist of the appropriate combination of catalog sheets, certificate of compliance, material lists, manufacturer's brochures, technical bulletins, specifications, diagrams, product samples, or other requested information necessary to describe a system, product, or item. Submittals for systems shall be bound together and include all manufactured items for the system. Six copies of each submittal shall be transmitted to the Engineer. Three copies will be returned to the Contractor.

Additional submittal requirements are included in the specific Technical Specifications included in Parts 2 and 3 of these Special Provisions.

2-5.3.1 GENERAL The following is added to Section 2-5.3.1 of the Standard Specifications:

Contractor's attention is directed to Section 6-1 of these Special Provisions regarding required submittals for pre-construction meeting.

Prior to the pre-construction conference and per section 6-1 of these Special Provisions, the Contractor shall submit to the City for review a tentative construction schedule, traffic control plans, 24 hour emergency phone numbers, and copies of business licenses and applicable permits, and sample flyers/ door hangers for public notifications.

A partial list of the required submittals is as follows:

- Source of supply of all materials
- Certificates of compliance and certified test reports as required in Section 203-1.3
- Project Schedule including diagrams/maps indicating phasing/parking
- 24-hour Emergency phone number list
- Business licenses

Work that utilizes processes, equipment, or materials that have not been accepted is performed at the contractors own risk. Work performed utilizing rejected processes, equipment, or materials will be removed, repaired, or redone at the Contractor's expense to the satisfaction of the Engineer.

2-5.3.2 WORKING DRAWINGS The following is added to Section 2-5.3.2 of the Standard Specifications:

RECORD DRAWINGS ("As Builts"): The Contractor shall keep and maintain at the job site one record set of contract drawings. On these, it shall mark all project conditions, locations, configurations, and any another changes or deviations that may vary from the details represented on the original contract drawings, including buried or concealed construction and utility features that are revealed during the course of construction. Record drawings may be in the form of a set of prints with carefully plotted information overlaid in pencil of a clearly legible and reproducible contrasting color to the drawing, except the final record drawings shall be prepared on the reproducible prints supplied by the City.

Special attention shall be given to recording the horizontal and vertical location of all buried utilities that differ from the locations indicated, or that were not indicated on the Contract Drawings. Said record drawings shall be supplemented by any detailed sketches as necessary or as directed to indicate fully the work as actually constructed.

These master record drawings of the Contractor's representation of "as-built" conditions, including all revisions made necessary by addenda, change orders, and the like, shall be maintained up-to-date during the process of the work.

In the case of drawings that depict the detail requirement for equipment to be assembled and wired in the factory, the record drawings shall be updated by indicating those portions that are superseded by change order drawings or final shop drawings, and by including appropriate reference information describing the change orders by number and the shop drawings by manufacturer, drawing, and revision numbers.

Record drawings prepared by the Contractor shall be accessible to the Engineer at all times during the construction period and shall be delivered to the Engineer upon completion of the work.

EFFECT ON PROGRESS PAYMENTS: Requests for partial payments will not be approved if the record drawings are not kept current. All such record drawings will be inspected by the Engineer each month, and the City will not process monthly payment requests unless such drawings are current to the satisfaction of the Engineer.

FINAL RECORD DRAWINGS: Upon substantial completion of the work and prior to final acceptance by the City, the Contractor shall complete and deliver the completed set of record drawings to the Engineer conforming to the construction records of the Contractor. This set of drawings shall consist of corrected plans showing the reported location of the work. The information submitted by the Contractor and incorporated by the Engineer into the record drawings will be assumed to be reliable, and the Engineer will not be responsible for the accuracy of such information, nor for any errors or omissions that may appear on the record drawings as a result. A set of reduced record drawings, laminated in plastic, shall be provided for traffic signal work, street or park lighting work, communications systems work, and irrigation work. Such drawings shall become the property of the City.

EFFECT ON FINAL PAYMENT: An amount to be determined by the Engineer will be withheld from retention until the Contractor-prepared final record drawings have been delivered to the Engineer.

2-5.3.3 SHOP DRAWINGS The following is added to Section 2-5.3.3 of the Standard Specifications:

Additional shop drawing requirements are included in the specific Technical Specifications included in Parts 2 and 3 of these Special Provisions. **A partial list of the required shop drawings is:**

- **Duct work / plenum casing**
- **Dampers**
- **Structural steel water coil supports.**

2-5.3.4 SUPPORTING INFORMATION The following is added to Section 2-5.3.4 of the Standard Specifications:

The following is added to the last paragraph of Section 2-5.3.4:

Additional submittal requirements are included in the specific Technical Specifications included in Parts 2 and 3 of these Special Provisions. **A partial list of the required submittals is as follows:**

- **Mechanical equipment**
- **Electrical equipment**
- **Heat exchange coils**
- **Electrical light fixtures and materials**
- **Testing and Balancing Reports**
- **HVAC supplies and equipment**
- **Equipment anchorage and metal grills**
- **Paint and coating materials as applicable.**
- **Piping and Pipe supports / bracing**

Contractor shall submit the following to the City for review prior to the pre-construction meeting per section 6-1 of these specifications:

- Demolition Work Permit (CCR Title 8, Section 1717; three stories or higher OSHA permit required)
    - Activity Notification Form (CCR Title 8, Section 341.1 (f))
- Asbestos Abatement Contractor Regulations
    - Certified technicians (CCR Title 8, Section 341.16)
    - OSHA notification (CCR Title 8, Section 341.16)
- Lead work (CCR title 8, Section 1532 1 (p); concentration greater than 5,000 parts per million required OSHA notification)
- All other Permits as required by Federal or State Law

2-6 WORK TO BE DONE The following is added to Section 2-6 of the Standard Specifications:

UNAUTHORIZED WORK: Any work done beyond the lines or grades shown on the plans and specifications, or beyond lines and grades established by the Engineer pursuant to the plans, or any work done without written authority of the Engineer, or performed during unauthorized working hours, or performed without benefit of or subject to inspection, shall be consider as unauthorized work and no compensation will be allowed therefore. The Engineer shall have the authority to have such work removed and the area restored and to deduct the cost thereof from money due or to become due to the Contractor.

The Contractor shall be subject to liquidated damages in accordance with Section 6-9 of these Special Provisions for each incident of unauthorized work.

2-9 SURVEYING

2-9.2 SURVEY SERVICE Section 2-9.2 of the Standard Specifications is replaced with the following:

The Engineer will perform surveying services as listed below.

1. **No surveying services are required or provided on this project.**

Any construction survey stakes other than those specified above shall be the responsibility of the Contractor. All surveying performed by the Contractor shall be under the direct supervision of a California Licensed Land Surveyor or Professional Civil Engineer licensed to perform land surveying. Contractor shall provide the Engineer with copies of cut sheets and any other pertinent survey documentation, upon request of the Engineer.

2-9.5 PAYMENT The following Section is added.

The lump sum price bid for Construction Surveying shall include full compensation for labor, equipment, and materials required to perform work under this section.

When the Contract does not include a pay item for Construction Surveying as specified above, full compensation for any Construction Surveying required shall be included in the price bid for the item of work requiring such services and no additional compensation will be allowed.

Specifications:

<u>2-11.1 QUALITY CONTROL</u> Quality Control is distinctly the sole duty of the Contractor and said duty shall not be avoided by any act or omission on the part of the inspector(s).

The work shall be conducted under the general observation of the Engineer acting directly and/or through various inspectors at the site and shall be subject to intermittent inspection (Quality Assurance) by said representatives of the City to assure strict compliance with the requirements of the contract documents. The presence of the inspector shall not be required nor relieve the Contractor of the responsibility for the proper execution of the work in accordance with all requirements of the contract documents.

Whenever the Contractor is ready to backfill, bury, cast in concrete, hide, or otherwise cover or make inaccessible any work under the contract, the Contractor shall notify the Engineer not less than before noon of the working day prior to the beginning of any such work to be inspected or tested, so that the required inspections can be scheduled and performed. Failure of the Contractor to notify the Engineer at least before noon of the working day before any such inspections shall be reasonable cause for the Engineer to require sufficient delay in the Contractor's schedule to allow time for such inspections, and any remedial or corrective work required, and all costs of such delays, including its impact or effect upon other portions of the work, shall be borne by the Contractor.

The Contractor shall not call for any inspections until the Contractor is absolutely certain that all obligations for quality control have been fulfilled, and the work is in strict compliance with the requirements of the plans and specifications.

The Contractor shall be solely responsible for arranging inspections required by the Building Regulations Division or other jurisdictions where permits are required pursuant to Section 7-5 of these Special Provisions. The Engineer shall be kept informed of the status of such permits and related inspections.

<u>2-11.2 RE-INSPECTION</u> A re-inspection fee may be assessed for each inspection or re-inspection when:

1. Such portion of work for which inspection is called is not complete, or when corrections called for are not made.

2. When the permits are not properly posted at the work site.

3. The approved plans are not readily available to the inspector.

4. When the Contractor fails to provide access to the work on the date for which inspection is requested.

5. For obvious non-compliance and/or for deviating from plans and specifications without the required approval of the Engineer.

6. Any unauthorized work.

7. Work not subject to initial inspection.

8. Continuous failure of material testing.

To obtain a re-inspection, the applicant shall request re-inspection in writing before noon of the working day before re-inspection is required, including agreement for payment of the inspector's current hourly rate, plus laboratory costs for repeated materials testing.

In instances where re-inspection fees have been assessed, no additional inspection of the work will be performed until the required fees have been deducted from money due or to become due to the Contractor.

SECTION 3 - CHANGES IN WORK

Changes in work shall be governed by provisions in Section 3, "Changes In Work", of the Standard Specifications, except as modified herein.

3-2.1.1	Changes Initiated By The City
3-3	Extra Work
3-3.1	General
3-3.2	Payment
3-3.2.1	General
3-3.2.2	Basis For Establishing Costs
3-3.2.3	Mark Up
3-3.3	Daily Reports By Contractor
3-4	Changed Conditions
3-5	Disputed Work
3-6	False Claims Act Certification

3-2.1.1 CHANGES INITIATED BY THE CITY Changes greater than 25 percent (25%) of the total cost of the following contract items may be made by the City without adjustment in the contract unit prices:

Bid Item No.	Description
	None

3-3 EXTRA WORK The following is added to Section 3-3 of the Standard Specifications:

Extra work shall require a signed contract change order, or a written order from the City, authorizing Contractor to proceed with extra work for an agreed upon price. The expressed terms of the signed change order shall govern over any conflicting documents, including but not limited to, any proposals for change orders.

Work performed in response to an emergency shall be performed on an extra work basis (time and material basis) and shall be governed by this section.

3-3.1 GENERAL The following paragraph is added to Section 3-3.1 of the Standard Specifications:

When forces or labor used for extra work are not those of the Contractor or subcontractors, such forces or labor shall be treated as subcontractors and the Contractor shall be responsible for their work.

3-3.2 PAYMENT

3-3.2.1 GENERAL The following is added to Section 3-3.2.1 of the Standard Specifications:

When changes in work are to be paid for as Extra Work, in accordance with Section 3-3.2, "Payment", of the Standard Specifications, the labor, materials, and equipment used in the performance of such work shall be subject to the approval of the City.

3-3.2.2 BASIS FOR ESTABLISHING COSTS Section 3-3.2.2 of the Standard Specifications is revised as follows:

(a) **Labor:** The cost of labor for the workers used in the actual and direct performance of the work, whether the employer is the Contractor, subcontractor, or other force, will be the sum of the following:

The actual wages paid at a rate not to exceed the State of California Department of Industrial Relations General Prevailing Wage Rates. The wages shall include any employer payments to or on behalf of the workers for health and welfare, pension, vacation, apprenticeship funds, and similar purposes (fringe benefits).
The use of a labor classification that would increase the extra work cost will not be permitted unless the Contractor establishes the necessity for such additional costs. Labor costs for equipment operators and helpers shall be reported only when such costs are not included in the invoice for equipment rental. The labor cost for foremen shall be proportioned to all of their assigned work and only that applicable to extra work will be paid.

Non-direct labor costs, including superintendence, shall be considered part of the markup of 3-3.2.3 (a).

To the actual wages, as defined above, will be added a labor surcharge set forth in the California Department of Transportation publication entitled "Labor Surcharge and Equipment Rental Rates", which is in effect on the date upon which the work is accomplished. The labor surcharge shall constitute full compensation for all payments imposed by State and Federal laws and for all other payments made to, or on behalf of, the workers, other than actual wages as defined above. The six items included are Workers Compensation, Social Security, Medicare, Federal Unemployment, State Unemployment, and State Training Taxes.

Fringe benefit statements from applicable collective bargaining units shall be provided for verification.

(b) **Materials**: No additions, deletions, or revisions.

(c) **Tool and Equipment Rental**: Revise the second paragraph of 3-3.2.2 (c) to read:

The rates to be used in determining equipment rental costs of Contractor owned and maintained equipment shall be the lesser of listed rates prevailing locally at equipment rental agencies or distributors, or of listed rates in the California Department of Transportation publication entitled "Labor Surcharge and Equipment Rental Rates", at the time the work is performed. The rates to be used in determining equipment rental costs of equipment obtained at local equipment rental agencies or distributors shall be paid per invoice. The Contractor's owned equipment shall be used to the greatest extent possible.

Revise the fourth paragraph of 3-3.2.2 (c) to include:

Rental rates for Contractor owned/maintained equipment not in actual use that remains at the work site exclusively to perform the extra work shall be adjusted by the Delay Factor Rate up to eight (8) hours, and equipment used in excess of eight (8) hours per day or on weekends and holidays shall be adjusted by the Overtime Factor per the "Labor Surcharge and Equipment Rental Rates".

(d) **Other Items**: No additions, deletions, or revisions.

(e) **Invoices**: No additions, deletions, or revisions.

3-3.2.3 MARK UP Section 3-3.2.3 is replaced as follows:

(a) **Work by Contractor**: The following percentages shall be added to the Contractor's costs and shall constitute the markup for all overhead and profits:

1) Labor	33%
2) Materials	15%
3) Equipment Rental	15%
4) Other Items and Expenditures	15%

(b) **Work by Subcontractor**: When all or any part of the extra work is performed by a Subcontractor, the markup established in 3-3.2.3 (a) shall be applied to the Subcontractor's actual cost of such work. A markup of ten percent (10%) on the first $5,000 of the subcontracted portion of the extra work and a markup of five percent (5%) on work added in excess of $5,000 of the subcontracted portion of the extra work may be added by the Contractor.

The above markups shall constitute full compensation for all non-direct overhead costs not specifically designated as costs in Section 3-3.2.2 of these Special Provisions, including but not limited to fixed field cost (field overhead), home office overhead, liability insurance, and increased insurance and bond premiums. The total payment made as provided above shall be deemed to be the actual cost of the work and shall constitute full compensation therefore.

3-3.3 DAILY REPORTS BY CONTRACTOR The following is added to Section 3-3.3 of the Standard Specifications:

Contractor (and Subcontractors) shall submit DEW (Daily Extra Work) Reports on the attached form.

3-4 CHANGED CONDITIONS The following is added to Section 3-4 of the Standard Specifications

Any notice of Changed Conditions shall include any potential delay claims, and any potential claims for additional compensation in accordance with Section 6-6 of the Standard Specifications and these Special Provisions.

City of San Leandro – Engineering and Transportation Department

DAILY EXTRA WORK REPORT

(Determination of Time and Materials)

DATE OF REPORT: _____

PROJECT NAME: _____

_____

PROJECT NO.: _____

DATE WORK PERFORMED: _____

WORK PERFORMED BY: _____
(Contractor/Sub-Contractor/Specialty)

CONTRACTOR JOB NO. : _____

DESCRIPTION OF WORK: _____

_____

_____

_____

EQUIP. NO.	EQUIPMENT	HOURS	HOURLY RATE		EXTENDED AMOUNTS		P.R. NO.	LABOR	HOURS	HOURLY RATE		EXTENDED AMOUNTS	
									O.T.				
									REG.				
									O.T.				
									REG.				
									O.T.				
									REG.				
									O.T.				
									REG.				
									O.T.				
									REG.				

MATERIAL and/or WORK - DONE BY SPECIALISTS								
DESCRIPTION	NO. UNIT	UNIT COST		EXTENDED		SUB-TOTAL		
						SUBSISTENCE _____ NO._____ @ $_____		
						TRAVEL EXPENSE _____ NO._____ @ $_____		
						LABOR SURCHARGE (if not included in hourly rate) _____%		
						TOTAL COST of LABOR	A	
TOTAL COST of EQUIPMENT, MATERIALS, and WORK							B	
						+ 33% MARKUP on LABOR COST	(A)	
						+ 15% MARKUP on EQUIPMENT, MATERIAL, and WORK COST	(B)	
						WORK BY SUBCONTRACTOR: + 10% on FIRST $5,000 and 5% on WORK IN EXCESS of $5,000		
						TOTAL THIS REPORT		

VERIFICATION of LABOR, EQUIPMENT, and MATERIAL PROVIDED:

_____ _____
Contractor's Representative Date

_____ _____
Project Inspector Date

_____ _____
REVIEWED: Sr. Engineering Inspector Date

ACCEPTED FOR PROGRESS PAYMENT: _____ **DATE:** _____ **CCO NO.:** _____
Project Manager

3-5 DISPUTED WORK The following is added to Section 3-5, "Disputed Work", of the Standard Specifications:

For claims of less than three hundred and seventy five thousand dollars ($375,000), the procedure for claims resolution shall be as stipulated in Article 1.5 of the California Public Contracts Code.

3-6 FALSE CLAIMS ACT CERTIFICATION Section 3-6 is added to Section 3 of the Standard Specifications as follows:

All change orders submitted by the Contractor, and any claim for additional compensation must be accompanied by the following declaration:

"I, _____, being the _____ of _____ (Contractor), declare under penalty of perjury under the laws of the State of California, and do personally certify and attest that: I have thoroughly reviewed the attached request for change order and know its contents, and said request for change order is made in good faith; that it is supported by truthful and accurate data; that the amount requested and the additional time requested accurately reflects the allowable expenses that would be incurred, and the time necessary, to perform the change order; and further, that I am familiar with California Penal Code Section 72 and California Government Code Section 12650, et seq., pertaining to false claims, and further know and understand that submission or certification of a false claim may lead to fines, imprisonment, or other severe legal consequences."

SECTION 4 - CONTROL OF MATERIALS

Contractor's attention is directed to Section 4, "Control of Materials", of the Standard Specifications.

4-1	Materials And Workmanship
4-1.1.1	Buy American Requirements
4-1.5	Certification

4-1 MATERIALS AND WORKMANSHIP Section 4-1 of the Standard Specifications is amended as follows:

4-1.5 CERTIFICATION The following is added to Section 4-1.5, "Certification," of the Standard Specifications:

A Certificate of Compliance shall be furnished prior to the use of any materials for which these Special Provisions require that such a certificate be furnished. In addition when so authorized in these Special Provisions, the Engineer may permit the use of certain materials or assemblies prior to sampling and testing if accompanied by a Certificate of Compliance. The certificate shall be signed by the manufacturer of the material or the manufacturer of assembled materials and shall state that the materials comply in all respects to the requirements of the specifications. A Certificate of Compliance shall be furnished with each lot of materials delivered to the work and the lot so certified shall be clearly identified in the certificate.

All materials used on the basis of a Certificate of Compliance may be sampled and tested at any time. The fact that a material is used on the basis of a certificate of Compliance shall not relieve the Contractor of responsibility for incorporating material in the work which conforms to the requirements of the plans and specifications and any material not conforming to such requirements will be subject to rejection whether in place or not.

The City reserves the right to refuse to permit the use of material on the basis of Certificate of Compliance

The form of the Certificate of Compliance and its disposition shall be as directed by the Engineer.

4-1.6 TRADE NAMES OR EQUALS The following is added to Section 4-1.6, "Trade Names or Equals," of the Standard Specifications:

The following items below are proprietary items that have no known equal to the City of San Leandro at this time. These items were specified because of a particular aesthetic look, performance features, or to match other installations to facilitate future maintenance and equipment replacement.

'ABB" or 'EATON' variable speed drives for the HVAC euipment.

Contractor shall submit substitution requests for approval no later than 10 days prior to bid opening.

4-1.9 CITY FURNISHED MATERIALS The following is added to Section 4-1 as follows:

The Contractor shall submit a written request to the Engineer for delivery of City furnished material at least fifteen (15) days in advance of the date of its intended use. The request shall state the quantity and the type of each material.

The material will be available to the Contractor at the City's Public Works Center located at 14200 Chapman Road, San Leandro, California. Materials shall be hauled to the site of the work by the Contractor at his expense, including any necessary loading and unloading that may be involved. All costs of handling and placing City furnished material shall be considered as included in the price paid for the contract item involving such City furnished material.

The Contractor shall be responsible for all materials furnished to him, and shall pay all demurrage and storage charges. City furnished materials lost of damaged from any cause whatsoever shall be replaced by the Contractor at his expense. The Contractor shall be liable to the City for the cost of replacing City furnished materials and such cost may be deducted from monies due or to become due the Contractor. All City furnished material that is not used on the work shall remain the property of the City and shall be delivered to the Public Works Service Center.

The following materials will be furnished to the Contractor:

1. **HVAC controls programming to be completed by City Contractor.**
2. **Fire detectors and alarms to be completed City Contractor.**

Note: Contractor shall coordinate his work and schedule with above City contractors.

SECTION 5 - UTILITIES

Contractor's attention is directed to Section 5, "Utilities", of the Standard Specifications, except as modified herein.

5-1 Location
5-2 System Outage Request Form

5-1 LOCATION The third and fourth paragraphs of Section 5 of the Standard Specifications are revised as follows:

As provided in Section 4216 of the California Government Code, Contractor shall contact the Underground Service Alert (USA) of Northern California at 1-800-227-2600 and provide them the limits of work a minimum of two working days prior to starting excavation operations at a given location. In addition, Contractor shall submit each USA ticket number and OSHA Activity Notification Form, (including the submitted work limits, date, and time issued), to the Engineer prior to starting excavation operations at that location. Contractor shall also keep the applicable USA ticket open until completion of excavation operations at a given location.

5-2 PROTECTION The following provisions are added to the end of the fourth paragraph of Section 5-2:

In addition to the requirements of Section 5-2 of the Standard Specifications, In the event of disturbance or damage to a sewer line to the extent that an emergency sewer point repair is required, the Contractor shall contact the Engineer (and Caltrans if in its ROW) immediately for additional instructions prior to beginning repairs.

Contractor shall protect the existing sanitary sewer system from blockages, surcharges, and overflows. Contractor shall not plug, reroute, or bypass flows that will cause undue stress on the system or cause overflows at the Water Pollution Control Plant (WPCP) or within the community.

WPCP Phone Numbers:

Monday – Friday	7:00 a.m. to 4:00 p.m.	(510) 577-3434
	After Hours	(510) 577-3459

SECTION 6 - PROSECUTION, PROGRESS AND ACCEPTANCE OF THE WORK

The prosecution of work, progress, and acceptance of work shall be done in accordance with Section 6, "Prosecution, Progress, and Acceptance of the Work", of the Standard Specifications, except as modified herein.

6-1	Construction, Schedule, And Commencement Of Work
6-2	Prosecution Of Work
6-5	Termination
6-4	Written Notice And Report
6-7.2	Working Days
6-8	Completion, Acceptance And Warranty
6-9	Liquidated Damages
6-10	Use Of Improvement During Construction

6-1 CONSTRUCTION, SCHEDULE AND COMMENCEMENT OF WORK In addition to the requirements of Section 6-1 of the Standard Specifications, the following shall also apply:

The Contractor shall not begin work until the Notice to Proceed is issued by the City. Contractor shall diligently prosecute the work to completion before the expiration of

65 working days.

The City shall begin charging working days on the fifth working day following the date of issuance of the Notice to Proceed.

Failure to complete the work within allotted working days shall subject the Contractor to liquidated damages in accordance with Section 6-9 of these Special Provisions.

Prior to the issuance of the Notice to Proceed, a pre-construction conference will be held at the office of the Engineer between the City and the Contractor. The purpose of this meeting shall be to discuss the scope of work, the plans and specifications, existing conditions, materials to be ordered, equipment to be used, and all essential matters pertaining to the prosecution of and satisfactory completion of the project as required. The Contractor's representatives at this conference shall include the project manager, superintendent, foremen, and major subcontractors. This pre-construction conference will be scheduled immediately after the contract agreement has been approved by the City.

Five (5) working days prior to the pre-construction conference, the Contractor shall submit six (6) copies of the following documents:

1. A preliminary construction schedule pursuant to Section 6-1 of the Standard Specifications in a form acceptable to the Engineer. At a minimum, the schedule will detail the proposed starting and proposed completion dates of the various activities, submittal schedule, procurement of materials, and scheduling of manpower and equipment, and a critical path of controlling operations. Subcontractors' schedules shall be incorporated into the general contractor's schedule.

   Within the first seven working days of this project, the Contractor shall submit a final construction schedule to the Engineer.

For each day beyond the submission deadline that the City does not receive the schedule, the Contractor shall be subject to liquidated damages in accordance with Section 6-9, deducted from money due or to become due to the Contractor.

All schedule changes shall be submitted to the Engineer prior to the revised tasks being performed. All changes are subject to any limitations placed on the order of work made by these specifications.

The Contractor shall be subject to liquidated damages in accordance with Section 6-9, deducted from money due or to become due to the Contractor, for any work task performed outside of the project schedule.

A. City Review of Schedule. The City may review the Contractor's submitted schedule and may note any exceptions. The Contractor shall correct any exceptions noted by the City within five (5) working days of being notified of the exceptions. The City's acceptance of a schedule does not relieve the Contractor from sole responsibility for scheduling, sequencing, and pursuing the work to comply with the requirements of the contract documents. The City shall not accept any schedule that provides for a completion date earlier than the Time of Completion. The City shall not accept any project schedule or schedule of values shows that the Contractor has engaged in front-end loading. "Front-end loading" is defined as the overestimation of the cost of work to be performed at the beginning of the project and underestimating the cost of work to be performed at the end.

B. Update of Schedule. After submission of a schedule to which the City has taken no exceptions, the Contractor shall submit an updated schedule monthly, or with each progress payment request, whichever is more frequent, or upon the request of the Engineer until completion of the work. The updated schedule shall include as-built information on the actual progress of work as of the date specified in the updated schedule and anticipated changes to planned activities.

   In addition to monthly schedule updates, a two week "look ahead schedule" shall be provided at weekly progress meetings.

C. Float. The schedule shall show early and late completion dates for each task. The number of days between these dates shall be designated as "float". Float shall be designated to the project and shall be available to both the City and the Contractor as needed.

D. Failure to Submit Schedule. If the Contractor fails to submit the schedule within the time period specified in this Section, or the updated schedule as specified in this Section, or submit a schedule to which the City has taken uncorrected exceptions, the City shall be entitled to withhold payment for the next application for payment submitted after the schedule or updated schedule becomes late until such time as an acceptable schedule or updated schedule is submitted to the City.

E. Responsibility for Schedule. The Contractor shall have sole and exclusive responsibility for creating the schedule and properly updating it. The City has no authority to approve the schedule. The City may note exceptions to any schedule submitted by the Contractor. However, it shall be the Contractor's sole responsibility to determine the proper method to address exceptions and the City's review of the schedule shall not serve to place any such obligation on the City. Whenever a schedule update shows a completion date beyond the Time of Completion, the Contractor shall submit a proposed recovery schedule to the City.

F. Submission of Schedules. Schedules and updated schedules shall be submitted in hard copy or in an electronic format. Contractor may use Microsoft Project, or other scheduling software, subject to the approval of the Engineer. The submission of a schedule in compliance with this section shall not relieve the Contractor of any other reporting requirements set forth in the contract documents.

G. Specification of "activity". As used in this Section, an "activity" is specified as follows:

1) Each activity shall be a unit of work that requires an amount of time for its performance not exceeding fifteen (15) days;

2) Each activity shall be a logically separate part of the work, defined by an observable start and an observable finish;

3) The scope of the activity shall be formed from the largest grouping of related operations that permit a continuous and measurable flow of work and that can proceed without affecting or being abetted by other activities;

4) The scope of the activity shall be small enough to permit a reasonable appraisal of its status.

2. The name, daytime phone number, and 24-hour emergency phone number of the Contractor's representatives(s) pursuant to Section 7-6 of the Standard Specifications.

3. Photocopies of current business licenses for Contractor and all listed subcontractors.

   EFFECT ON PROGRESS PAYMENT: Progress payments will not be approved until business licenses from the Contractor and all listed subcontractors have been submitted.

4. Photocopies of applicable licenses, permits, certifications, documents, etc. pursuant to Section 7-5 "Permits".

No work will be permitted until the Contractor has satisfactorily complied with all elements of this Section. Notwithstanding the foregoing, a Notice to Proceed may be issued to the Contractor on the day of the scheduled pre-construction meeting. The City shall start charging working days on the fifth working day following the issuance of Notice to Proceed. Contractor shall not be due additional compensation or working days due to non-compliance with this Section.

The Contractor shall be subject to liquidated damages per Section 6-9 of these Special Provisions for failure to follow stated directives of this Section.

6-2 PROSECUTION OF WORK The following paragraph(s) are added to Section 6-2 of the Standard Specifications:

Note: this is an occupied building which will be in 24 hour operation during construction. Contractor shall minimize interference to workers in the building, including implementation of the following measures:

- **Contractor to provide temporary ventilation and air conditioning during construction as described on the plans.**
- **Contractor to maintain utility services to building at all times unless advanced authorization is provided by the City.**
- **Contractor shall access project work area from back door on the northwest corner of the first floor.**
- **Equipment may also be lifted by crane from back of building and through the outside air damper with prior City approval as discussed in section 7-10 of these Special Provisions .**
- **Contractor shall secure work site access at all times.**

Prior to commencing construction the Contractor shall complete, to the satisfaction of the Engineer, the following:

1. Advisory Signs
2. USA/Caltrans Notification
3. No Parking Signs placed
4. Utility Coordination/Installations

6-5 TERMINATION Section 6-5 of the Standard Specifications is deleted and replaced with the following:

1. In addition to all other available remedies that the City may have under the agreement, and at law or equity, the City may terminate the Contractor's control of the work:

   A. If the Contractor or any of its subcontractors engaged in the performance of the work fails to timely perform the work or any of the Contractor's material obligations under the contract documents (including but not limited to, submission of an acceptable schedule) except due to reasons beyond the control of the Contractor pursuant to the contract documents.

   B. If the Contractor is adjudged bankrupt, or if it should make a general assignment for the benefit of creditors, or if a receiver should be appointed on account of its creditors.

   C. If the Contractor or any of the subcontractors engaged in the performance of the work persistently or repeatedly refuses or fails to supply enough properly skilled workers or proper materials for the timely completion of the work.

   D. If the Contractor fails to make prompt payment to subcontractors engaged in the performance of the work or for material or labor used in the performance of the work in accordance with the contract documents and applicable law.

   E. If the Contractor or any subcontractors engaged in the performance of the work persistently disregard laws or ordinances applicable to the performance of the work, or the instructions of the City, the construction manager, the architect, or other authorized representatives of the City.

   F. For any reason or for no reason, at the City's sole discretion.

2. If the City intends to terminate the Contractor's control of the work for any of the reasons specified in this section, the City will immediately serve written notice to the Contractor and its sureties. Notice of the City's intent to terminate the Contractor's control of the work will be given by certified mail and will specify the grounds for termination, the required cure, if any, and the time by which the cure must be performed. Upon receipt of notice of the City's intent to terminate the Contractor's control of the work, the Contractor will have ten (10) days from receipt of the notice, or a longer time specified in the notice, to cure its default. If the Contractor does not perform the required cure by the time specified in the notice, the City will issue a written notice of termination to the Contractor and its sureties by certified mail. The notice of termination will specify:

   A. That upon receipt of the notice the Contractor's right to perform or complete the work, including on behalf of the Contractor's sureties, is terminated;

   B. That the Contractor's sureties will have the right to take over and complete the work and perform all of the Contractor's remaining obligations that have accrued under the agreement;

   C. That if the Contractor's sureties do not both give the City written notice of their intention to take over and perform the agreement and commence completion of the work and performance of all of

the Contractor's remaining obligations that have accrued under the agreement within ten (10) days after receipt of notice of termination, the City may declare the Contractor's sureties in default and take over the completion of the work, or have the work completed for the account and at the expense of the Contractor and its sureties, and the Contractor and its sureties will be liable to the City for any resulting excess cost.

3. The City may, in addition to all other available remedies that the City may have under the contract documents and at law or equity, deduct any such excess cost of completing the work from amounts that are due or that may become due the Contactor.

4. Upon termination of the Contractor's control of the work, the Contractor will, if so directed by the City, immediately remove from the work site any and all materials and personal property belonging to the Contractor that have not been incorporated in the work and the Contractor and its sureties will be liable upon their bond for all damages caused the City by reason of the Contractor's failure to complete the work.

5. The City reserves the right to refuse use of any Contractor assigned by any surety to complete the work.

6. If the City completes or has completed any portion of, or the whole of the work, following termination of the Contractor's control of the work, the City will neither be liable for nor account to the Contractor or the Contractor's sureties in any way for the time within which, or the manner in which such work is performed, or for any changes made in such work or for the money expended in satisfying claims, suits, or other obligations in connection with completing the work.

7. If, following termination of the Contractor's control, the unpaid balance of the contract price exceeds all costs of completing the work, the difference will be paid to the Contractor.

8. If the agreement or Contractor's control of the work is terminated for any reason, no allowances or compensation will be granted for the loss of any anticipated profit by the Contractor.

6-6.4 WRITTEN NOTICE AND REPORT Section 6-6.4 of the Standard Specifications is revised to read as follows:

If the Contractor desires payment for a delay as specified in Section 6-6.3 or an extension of time, the Contractor shall, within 15 days after the beginning of the delay, file with the City a written request and report as to the cause and extent of the delay. Said request shall be clearly titled, "Notice of Potential Claim." Failure by the Contractor to file these items within the time specified will be considered grounds for refusal by the City to consider such requests.

Upon receipt of a written request for extension of time or payment, the Engineer shall ascertain the facts and the extent of the delay, and his findings thereon shall be final and conclusive.

6-7.2 WORKING DAYS The following is added to Section 6-7.2 of the Standard Specifications

Unless otherwise directed or authorized, the Contractor's normal working day activities shall be limited to the hours between 7:00 a.m. and 6:00 p.m., Monday through Friday, excluding designated City holidays and other non-working days. This does not apply to lane closures, **see Section 7-10.3 for lane closure restrictions**.

All work shall be completed within the specified working hours on each working day or the Contractor shall be responsible for payment of inspection overtime at the current inspector's hourly overtime rate, including travel time where applicable, with a minimum charge of one (1) hour.

Working hours for work performed on non-working days (Saturday and Sunday), if permitted by the Engineer, shall be 8:00 a.m. to 6:00 p.m. unless otherwise approved in writing.

No work on holidays or other non-working days will be permitted unless approved in writing by the Engineer.

Deviation from normal working hours will not be allowed without prior written consent of the Engineer. In the event work is allowed by the Engineer outside of the normal working hours, at the written request of and for the benefit of the Contractor, inspection service fees shall be levied against the Contractor at the inspector's current hourly overtime rate, with a minimum charge of four (4) hours. The Contractor shall submit said written request no later than forty-eight (48) hours prior to the proposed work outside of the normal working hours.

The above charge may also be levied if inspection services are deemed necessary by the Engineer as a matter of public safety.

The following are the designated City holidays:

1. January 1 (New Year's Day).
2. The third Monday in January (Martin Luther King Jr.'s Birthday).
3. February 12 (Lincoln's Birthday).
4. The third Monday in February (Washington's Birthday).
5. The last Monday in May (Memorial Day).
6. July 4 (Independence Day).
7. The first Monday in September (Labor Day).
8. November 11 (Veterans' Day).
9. The fourth Thursday in November (Thanksgiving Day).
10. The day after Thanksgiving Day.
11. December 24 (Christmas Eve) through December 31 (New Year's Eve)

When a designated holiday falls on a Saturday, the preceding Friday shall be a designated holiday. When a designated holiday falls on a Sunday, the following Monday shall be a designated holiday.

Contractor's attention is hereby directed to Section 7-8, "Project Site Maintenance", and Section 7-10, "Public Convenience and Safety", of the Standard Specifications, regarding continuous project site maintenance and mud and dust control being provided 24 hours/day, 7 days/week.

The Contractor shall not be charged for a working day for days on which the Contractor is prevented by inclement weather or conditions resulting immediately therefrom adverse to the current controlling operation or operations, as determined by the Engineer, from proceeding with at least seventy-five percent (75%) of the normal labor and equipment force engaged on such operation or operations for at least sixty percent (60%) of the total daily time being currently spent on the controlling operation or operations.

Should the Contractor prepare to begin work at the regular starting time of any day on which inclement weather, or the conditions resulting from the weather, or conditions of the work, prevents the work from beginning at the usual starting time and the crew is dismissed as a result thereof, the Contractor will not be charged for a working day whether or not conditions should change thereafter during said day and the major portion of the day could be considered to be suitable for such construction operations.

The current controlling operation or operations is to be construed to include any feature of the work (e.g., an operation or activity, or a settlement or curing period) considered at the time by the Engineer and the Contractor, which, if delayed or prolonged, will delay the time of completion of the contract.

Determination that a day is a non-working day by reason of inclement weather or conditions resulting immediately therefrom shall be made by the Engineer. The Contractor will be allowed 15 days from the issuance of the Weekly Statement of Working Days in which to file a written protest setting forth in what respect Contractor differs from the Engineer, otherwise the decision of the Engineer shall be deemed to have been accepted by the Contractor as correct. The Engineer will furnish the Contractor a weekly statement showing the number of working days charged the preceding week, the number of working days remaining to complete the contract, and the date for completion thereof.

The Contractor will not be allowed any additional working days for any delay that does not affect the critical path as specified in the Contractor's schedule.

6-8 COMPLETION, ACCEPTANCE, AND WARRANTY The following is added to paragraph two (2) of Section 6-8 of the Standard Specifications:

Upon acceptance of the work and upon receipt and approval of the required documents (Record Drawing, Final Agreement of Quantities, Maintenance Bonds, Manufacturer Warranties, etc.) The Engineer will have a Notice of Completion recorded with the Alameda County Recorder's Office. All guarantee periods shall commence on date of said recordation.

The following paragraphs replace paragraph three (3) of Section 6-8 of the Standard Specifications:

GUARANTEE. The Contractor guarantees all of the work for one year from the date the City accepts the work. Upon receiving written notice of a need for repairs that are directly attributable to defective materials or workmanship, the Contractor must make good any defects arising or discovered in any part of the work by diligently commencing the necessary repairs within seven (7) days from the date of notice from the City. The guarantee and conditions shall be secured by a Maintenance Bond, as described in Section 2-4.

If the Contractor fails to make good any defects in the work in accordance with this provision, in addition to any other available remedy under the contract or at law or equity, the City may make good or have made good such defects in the work and deduct the cost from amounts that may be due or become due the Contractor, and/or call on the Contractor's Maintenance Bond for the cost of making good such defects and for the City's reasonable legal costs, if any, of recovering against the bond.

Notwithstanding the preceding, the Contractor shall remain responsible for repairing any work found to be defective at its sole cost regardless of when such defect is discovered by the City.

In addition to the Contractor's one-year guarantee, and the Contractor's ongoing obligation to repair any defective work, upon completion of the project and as a condition of acceptance of the project, the Contractor must deliver to the Engineer all written manufacturer warranties from manufacturers and/or subcontractors that guarantee and warrant specific products and installations against defects in materials and workmanship for periods following acceptance of the project. Such manufacturer warranties, if required, shall be so indicated in sections under Part 2 "Construction Materials" of the Special Provisions.

6-9 LIQUIDATED DAMAGES Section 6-9 of the Standard Specifications is replaced with the following:

Time is of the essence in the Agreement. By execution of the Agreement, the City and the Contractor (and Subcontractors) agree that it will be difficult or impossible to determine the actual damage that the City will sustain in the event of the Contractor's failure to fully perform the work or to fully perform all

of the Contractor's obligations that have accrued pursuant to the agreement by the time for completion. Accordingly, the City and the Contractor agree in accordance with California Government Code Section 53069.85 that the Contractor will forfeit and pay to the City liquidated damages in the sum of **$500.00 per day** for each and every calendar day completion of the work or performance of all of the Contractor's obligations that have accrued pursuant to the agreement is delayed beyond the time for completion. The City and the Contractor further agree in accordance with California Government Code Section 53069.85 that the liquidated damages sum specified in this provision is not manifestly unreasonable under the circumstances existing at the time the agreement was made, and that the City may deduct liquidated damages sums in accordance with this provision from any payments due or that may become due the Contractor under the agreement.

In addition, the Contractor shall pay the following sums for the associated liquidated damages:

Failure to provide and/or non-compliance to or violation of accepted construction scheduling and/or phasing, per Section 6-1 and 6-2	**$250.00**	**per each calendar day**
Performance of unauthorized work, per Section 2-6	**$100.00**	**per each incident**
Failure to provide adequate Project Site Maintenance 24/7, per Section 7-8	**$100.00**	**per each calendar day**
Storage of equipment and/or materials in public streets, per Section 7-10.2	**$100.00**	**per each calendar day/incident**

Each location, incident, non-compliance situation, and/or violation shall be considered separate occurrences and the resulting payments for damages are cumulative (even if occurred on same day).

6-10 USE OF IMPROVEMENT DURING CONSTRUCTION The following paragraphs are added to the provisions of Section 6-10 of the Standard Specifications:

Contractor will not be allowed any compensation due to any delay, hindrance, or inconvenience to Contractor's operations caused by City's decision to take over all or part of any completed facility or appurtenance.

Full compensation for conforming to the requirements in this Section of the Special Provisions shall be considered to be included in the prices paid for the various contract items of work and no additional compensation will be allowed therefore.

LANE CLOSURE REQUIREMENTS

SECTION 7 - RESPONSIBILITIES OF THE CONTRACTOR

Contractor's attention is directed to Section 7, "Responsibilities of the Contractor", of the Standard Specifications, except as modified herein.

7-2.2	Laws
7-2.2.1	Hours Of Labor
7-2.2.2	Prevailing Wage
7-2.2.5	Labor And Non-Discrimination
7-3	Liability Insurance
7-5	Permits
7-6	The Contractor's Representative
7-8	Project Site Maintenance
7-8.1	Cleanup And Dust Control
7-8.1.1	Recycling Of Construction Material
7-8.2	Air Pollution Control
7-8.3	Vermin Control
7-8.4	Sanitation
7-8.5	Temporary Light, Power And Water
7-8.6	Water Pollution Control
7-8.6.1	General
7-8.6.2	Material Storage
7-8.6.3	Dewatering Operations
7-8.6.4	Pavement Saw-Cutting Operations
7-8.6.5	Pavement Operations
7-8.6.6	Concrete Operations
7-8.6.7	Grading And Excavation Operations
7-8.6.8	Spill Prevention And Control
7-8.6.9	Vehicle/Equipment Cleaning
7-8.6.10	Contractor Training And Awareness
7-8.6.11	Good Housekeeping Practices
7-8.6.12	Enforcement
7-8.6.13	Payment
7-8.7	Drainage Control
7-8.8	Sound Control Requirements
7-10	Public Convenience And Safety
7-10.1	Traffic And Access
7-10.1.1	Pedestrian Access
7-10.1.2	Public Notification
7-10.2	Storage Of Equipment And Materials In Public Streets
7-10.2.1	Construction Staging/Stockpile Locations
7-10.3	Street Closures, Detours, And Barricades
7-10.3.1	Restricted Parking
7-10.3.2	Street Closures and Access
7-10.3.3	Traffic Control Plan Requirements
7-10.3.4	Implement Traffic Control
7-10.4	Public Safety
7-10.4.1	Safety Orders
7-10.4.5	Illness and Injury Prevention Program

7-2.2 LAWS The following sections are added to the provisions of Section 7-2.2 of the Standard Specifications:

7-2.2.1 HOURS OF LABOR Eight hours of labor constitutes a legal day's work. The Contractor shall forfeit, as a penalty to the City, $25.00 for each worker employed in the execution of the contract by the Contractor or any Subcontractor for each calendar day during which such worker is required or permitted to work more than eight (8) hours in any one calendar day and forty (40) hours in any one calendar week in violation of the provision of the Labor Code, and in particular, Section 1810 to Section 1815, thereof, inclusive, except that work performed by employees of Contractor in excess of eight (8) hours per day, and forty (40) hours during any one week, shall be permitted upon compensation for all hours worked in excess of eight (8) hours per day not less than one and one-half times the basic rate of pay, as provided in said Section 1815.

7-2.2.2 PREVAILING WAGE The City Council by Resolution No. 77-236 has adopted the general prevailing wage rates determined by the Director of Industrial Relations, State of California, to be part of this contract. The general prevailing wage rates applicable to the County of Alameda are listed in the publication entitled "General Prevailing Wage Rates". This document is hereby made part of this contract by reference. Copies of the current versions of this document are on file in the office of the City Clerk, City Hall, 835 East 14th Street, San Leandro, California.

The City will not recognize any claim for additional compensation because of payment by the Contractor of any wage in excess of the prevailing wage rates set forth in the General Prevailing Wage Rates which is part of this contract. The possibility of wage increases is one element to be considered by the Contractor in determining a bid, and will not under any circumstances be considered as a basis of claim against the City on the contract.

The Contractor shall comply with Labor Code Sections 1774 and 1775. The Contractor shall forfeit, as a penalty, $50.00 per each calendar day or portion thereof for each worker paid less than the stipulated prevailing rates in violation of the provisions of the Labor Code, and in particular Labor Code Sections 1770 to 1780 inclusive. In addition to said penalty, the difference between such stipulated prevailing wage rates and the amounts paid for each worker paid less than the stipulated prevailing wage rates shall be paid to each of said workers by the Contractor.

7-2.2.4 PAYROLL RECORDS The Contractor must comply with Labor Code Section 1776. The Contractor shall also be responsible or compliance by all Subcontractors.

The penalties specified in Subdivision (g) of the Labor Code Section 1776 for noncompliance with the provisions of said Section 1776 may be deducted from any monies due or which may become due to the Contractor.

A copy of all payroll shall be submitted with each progress payment application to the Engineer. Payrolls shall contain the full name, address, and social security number of each employee, their correct classification, rate of pay, daily and weekly number of hours worked, itemized deductions made, and actual wages paid. They shall also indicate apprentices and ratio of apprentices to journeymen. The employee's address and social security number need only appear on the first payroll on which their name appears. The payroll shall be accompanied by a "Statement of Compliance" signed by the employer or its agent indicating that the payrolls are correct and complete and that the wage rates contained therein are not less than those required by the contract. The "Statement of Compliance" shall be on forms furnished by the City or on any form with identical wording. The Contractor shall be responsible for submission of copies of payrolls of all subcontractors.

EFFECT ON PROGRESS PAYMENTS: If by the 15th of the month, the Contractor has not submitted satisfactory payrolls for all work performed during the monthly period ending on or before the 1st of that

month, the City will retain an amount equal to ten percent (10%) of the estimated value of the work performed (exclusive of mobilization) during the month from the next monthly estimate, except that such retention shall not exceed $10,000 nor be less than $1,000. Retentions for failure to submit satisfactory payrolls shall be additional to all other retentions provided for in the contract. The retention for a failure to submit payrolls for any monthly period will be released for payment on the monthly estimate for partial payments following the date that all the satisfactory payrolls for which the retentions were made are submitted.

The Contractor and each subcontractor shall preserve their payroll records for a period of 3 years from the date of the acceptance of the project.

7-2.2.5 LABOR NON-DISCRIMINATION Contractor shall comply with the Affirmative Action/Non-Discrimination and Equal Employment requirements of the City.

1. During the performance of this contract, Contractor agrees as follows:

   A. Contractor will not discriminate against any employee or applicant for employment because of race, color, religion, sex, sexual orientation, handicap, age, or national origin. Contractor will take affirmative action to ensure that applicants for employment are employed, and that employees are treated equally during employment, without regard to their race, color, religion, handicap, sex, sexual orientation, age, or national origin. Such action shall include but not be limited to the following: employment; upgrading; demotion or transfer; recruitment or recruitment advertising; layoff or termination; rates of pay or other forms of compensation; and selection for training, including apprenticeship.

   B. Contractor will incorporate the above Affirmative Action/Non-Discrimination provisions in all subcontracts for services covered by this contract.

   C. Minority and Female-Owned Business Enterprise. In connection with the performance of this contract, Contractor shall comply with the City's current policies as required by State or Federal Law and/or use its best efforts to obtain the maximum utilization of minority and female-owned business enterprises based in San Leandro and ensure that minority and female-owned enterprises based in San Leandro shall have maximum practicable opportunity for subcontractor work under this contract.

   D. General Employment Provisions Relating to Handicap/Disability Discrimination. No qualified individual with a handicap or disability shall, solely on the basis of such handicap or disability, be subjected to discrimination in employment by Contractor.

   E. Reports. Contractor shall provide such reports and/or documents to City as reasonably requested demonstrating compliance with the terms hereof.

   F. Attention is directed to Section 1735 of the Labor Code, which reads as follows:

      "No discrimination shall be made in the employment of persons upon public works because of the race, religious creed, color, national origin, ancestry, physical handicap, medical condition, marital status, or sex of such persons, except as provided in Section 12940 of the Government Code, and every contractor for public works violating this section is subject to all the penalties imposed for a violation of this chapter."

If the project is funded by fiscal assistance from another governmental entity, Contractor shall comply with all applicable rules and regulations of such fiscal assistance program incorporated into the Special Provisions.

7-3 LIABILITY INSURANCE Section 7-3, "Liability Insurance", of the Standard Specifications is revised to read as follows:

1. INSURANCE REQUIREMENTS Before beginning any work under this Agreement, Contractor, at its own expense, unless otherwise specified below, shall procure the types and amounts of insurance listed below against claims for injuries to persons or damages to property that may arise from or in connection with the performance of the work hereunder by the Contractor and its agents, representatives, employees, and subcontractors. Consistent with the following provisions, Contractor shall provide proof satisfactory to City of such insurance that meets the requirements of this section and under forms of insurance satisfactory in all respects, and that such insurance is in effect prior to beginning work for the City. Contractor shall maintain the insurance policies required by this section throughout the term of this Agreement. The cost of such insurance shall be included in the Contractor's bid. Contractor shall not allow any subcontractor to commence work on any subcontract until Contractor has obtained all insurance required herein for the subcontractor(s) and provided evidence that such insurance is in effect to City. Verification of the required insurance shall be submitted and made part of this Agreement prior to execution. Contractor shall maintain all required insurance listed herein for the duration of this Agreement.

A. Workers' Compensation. Contractor shall, at its sole cost and expense, maintain Statutory Workers' Compensation Insurance and Employer's Liability Insurance for any and all persons employed directly or indirectly by Contractor. The Statutory Workers' Compensation Insurance and Employer's Liability Insurance shall be provided with limits of not less than $1,000,000 per accident. In the alternative, Contractor may rely on a self-insurance program to meet those requirements, but only if the program of self-insurance complies fully with the provisions of the California Labor Code. Determination of whether a self-insurance program meets the standards of the Labor Code shall be solely in the discretion of the Contract Administrator. The insurer, if insurance is provided, or the Contractor, if a program of self-insurance is provided, shall waive all rights of subrogation against the City and its officers, officials, employees, and volunteers for loss arising from work performed under this Agreement.

B. Commercial General and Automobile Liability Insurance.

1) General Requirements: Contractor, at its own cost and expense, shall maintain commercial general liability insurance for the term of this Agreement in an amount not less than $2,000,000 per occurrence and automobile liability insurance for the term of this Agreement in an amount not less than $1,000,000 per occurrence. If a Commercial General Liability Insurance or an Automobile Liability form or other form with a general aggregate limit is used, either the general aggregate limit shall apply separately to the work to be performed under this Agreement or the general aggregate limit shall be at least twice the required occurrence limit. Such coverage shall include but shall not be limited to, protection against claims arising from bodily and personal injury, including death resulting therefrom, and damage to property resulting from activities contemplated under this Agreement, including the use of owned and non-owned automobiles.

2) Minimum Scope of Coverage: Commercial general coverage shall be at least as broad as Insurance Services Office Commercial General Liability occurrence form CG 0001 (most recent edition) covering comprehensive General Liability on an "occurrence" basis. Automobile coverage shall be at least as broad as Insurance Services Office Automobile Liability form CA 0001 (most recent edition), Code 1 (any auto). No endorsement shall be attached limiting the coverage.

3) Additional Requirements: Each of the following shall be included in the insurance coverage or added as a certified endorsement to the policy:

a. The Insurance shall cover an occurrence or on an occurrence basis, and not on a claims-made basis.

b. City, its officers, officials, employees, and volunteers are to be covered as insureds as respects: liability arising out of work or operations performed by or on behalf of the Contractor; or automobiles owned, leased, hired, or borrowed by the Contractor.

c. For any claims related to this Agreement or the work hereunder, the Contractor's insurance coverage shall be primary insurance as respects the City, its officers, officials, employees, and volunteers. Any insurance or self-insurance maintained by the City, its officers, officials, employees, or volunteers shall be excess of the Contractor's insurance and shall not contribute with it.

d. Each insurance policy required by this clause shall be endorsed to state that coverage shall not be canceled by either party, except after 30 days' prior written notice has been provided to the City.

e. Contractor hereby agrees to waive subrogation which any insurer or contractor may require from vendor by virtue of the payment of any loss. Contractor agrees to obtain any endorsements that may be necessary to affect this waiver of subrogation.

C. Builders Risk Insurance. Contractor will cause to be taken out and maintained in the name of the City and the Contractor until final completion and acceptance of the project: All Builder's Risk Insurance, including but not limited to coverage against loss or damage to the project by fire and lightning, extended coverage, vandalism, malicious mischief, flood, earthquake and collapse; said extended coverage shall cover loss or damage by explosion, windstorm, riot, aircraft, vehicle damage, smoke and other such hazards as are normally covered by such coverage. Such insurance (except the earthquake and flood coverage in the event that they are not fully or reasonably available) shall be in an amount equal to the replacement cost (without deduction for depreciation and subject to stipulated value in lieu of average clause) of all structures constituting any part of the Work, excluding the cost of excavations, of grading and of filling of the land, and except that such insurance (except earthquake and flood insurance) may be subject to deductible clauses not to exceed $10,000 for any one loss. Earthquake and flood insurance may be subject to deductible clauses not to exceed five percent (5%) of such replacement cost for any one loss. Such insurance need not cover loss or damage to the Contractor's equipment, scaffolding or other materials not to be consumed in the construction of the Project. Proof of said insurance shall be supplied to the Engineer prior to beginning Work.

The Contractor shall obtain from the insurer a waiver of subrogation endorsement for losses caused by fire or other perils to the extent covered by this insurance. Contractor shall pay any extra premium required therefor.

D. Environmental Insurance.

1) General Requirements. Contractor shall purchase and maintain liability insurance with coverage, as further specified below, for losses arising from or in any way related to pollution conditions, both sudden and non-sudden (gradual), which arise from or in connection with the Contractor's transportation services and any disposal facilities used in connection with the underlying Agreement. The required insurance coverage shall be endorsed to cover Non-Owned Disposal Sites. The Contractor's insurance shall include:

a. Pollution Legal Liability; and,

b. Environmental Transportation Liability insurance; provided, however, if the Contractor does not maintain a separate policy evidencing pollution liability coverage in relation to the Contractor's transportation services, then the Contractor's automobile liability insurance policy must be endorsed so as to satisfy the minimum scope of coverage related to the Contractor's transportation services as set forth in this Addendum.

2) Limits: The Policies shall contain minimum liability limits of:

a. Pollution Legal Liability - $5,000,000 per loss and $5,000,000 in the aggregate.
b. Environmental Transportation Liability - $5,000,000 per loss and $5,000,000 in the aggregate.

3) Form and Duration: Continuous coverage under the Policies shall be maintained until final completion or termination of the Project, in accordance with the underlying Agreement. If written on a claims made basis, continuous coverage under the Policies shall be maintained for a minimum of one year beyond final completion or termination of the Project, in accordance with the underlying Agreement.

E. <u>All Policies and Requirements.</u>

1) Acceptability of Insurers: All Insurance required by this section is to be placed with insurers with a Bests' rating of no less than A:VII.
2) Verification of Coverage: Prior to beginning any work under this Agreement, Contractor shall furnish City with complete and legible copies of certificates of insurance evidencing all policies delivered to Contractor by the insurer, including complete copies of all endorsements attached to those policies. All copies of certificates of insurance and endorsements shall show the signature of a person authorized by that insurer to bind coverage on its behalf. If the City does not receive the required insurance certificates and endorsements prior to the Contactor beginning work, it shall not waive the Contractor's obligation to provide them. The City reserves the right to require complete copies of all required insurance policies and endorsements at any time.
3) Deductibles and Self-Insured Retentions: Contractor shall disclose to and obtain the written approval of City for the self-insured retentions and deductibles before beginning any of the services or work called for by any term of this Agreement. At the option of the City, either: the insurer shall reduce or eliminate such deductibles or self-insured retentions as respects the City, its officers, employees, and volunteers; or the Contractor shall provide a financial guarantee satisfactory to the City guaranteeing payment of losses and related investigations, claim administration and defense expenses.
4) Wasting Policies: No policy required by Section 7.3 shall include a "wasting" policy limit (i.e. limit that is eroded by the cost of defense).
5) Waiver of Subrogation: Contractor hereby agrees to waive subrogation which any insurer or contractor may require from vendor by virtue of the payment of any loss. Contractor agrees to obtain any endorsements that may be necessary to affect this waiver of subrogation. Also, the Workers' Compensation policy shall be endorsed with a waiver of subrogation in favor of the entity for all work performed by the Contractor, its employees, agents, and subcontractors.
6) Subcontractors: Contractor shall include all subcontractors as insureds under its policies or shall furnish separate certificates and endorsements for each subcontractor. All coverages for subcontractors shall be subject to all of the requirements stated herein.

F. <u>Remedies.</u> In addition to any other remedies City may have if Contractor fails to provide or maintain any insurance policies or policy endorsements to the extent and within the time herein required, City may, at its sole option exercise any of the following remedies, which are alternatives to other remedies City may have and are not the exclusive remedy for Contractor's breach:

- Obtain such insurance and deduct and retain the amount of the premiums for such insurance from any sums due under the Agreement;
- Order Contractor to stop work under this Agreement or withhold any payment that becomes due to Contractor hereunder, or both stop work and withhold any payment, until Contactor demonstrates compliance with the requirements hereof; and/or
- Terminate this Agreement.

2. **INDEMNIFICATION AND CONTRACTOR'S RESPONSIBILITIES:** Contractor shall take all responsibility for the work, shall bear all losses and damages directly or indirectly resulting to Contractor, to any subcontractor, to the City, to City officers and employees, or to parties designated by the City on account of the performance or character of the work, unforeseen difficulties, accidents, occurrences, or other causes predicated on active or passive negligence, or the willful misconduct, of the Contractor or of any subcontractor. Contractor shall indemnify, defend, and hold harmless the City, its officers, officials, directors, employees, and agents from and against any or all loss, liability, expense, claim, costs (including costs of defense), suits, and damages of every kind, nature and description directly or indirectly arising from the performance of the work. This paragraph shall not be construed to exempt the City, its employees, and officers from its own fraud, willful injury or sole active negligence. By execution of this agreement, Contractor acknowledges and agrees that Contractor has read and understands the provisions hereof and that this paragraph is a material element of consideration.

   Approval of the insurance contracts does not relieve the Contractor or subcontractors from liability under this paragraph.

   A. Responsibility for Damage. The Contractor is solely responsible to protect the work, including site security, until project acceptance. The Contractor shall have the charge and care of the work, including materials, whether incorporated into the work or not, and shall bear the risk of injury, loss or damage to any part thereof by the action of the elements, vandalism, theft or any other cause, whether arising from the execution or from the non-execution of the work. The City of San Leandro and all officers and employees thereof connected with the work, including but not limited to the Engineer, shall not be answerable or accountable in any manner for any loss or damage that may happen to the Work or any part thereof; for any loss or damage to any of the materials or other things used or employed in performing the Work; for injury to or death of any person, either worker or public; or for damage to the Work or any property from any cause that might have been prevented by the Contractor, Contractor's workers, or anyone employed by the Contractor.

   B. Contractor Response to Potential Claims. In the event damage or injury to persons or property are suffered by a third party (i.e. not City employees, contractors, consultants, subcontractors, volunteers or Contractor's employees, consultants, subcontractors, or invitees) and such third party contacts the City for recovery or restitution for damages, City shall forward such party and all information received from them to Contractor for response. Contractor shall receive such information, and respond to the injured party within seven (7) calendar days, with a copy of the response to City, which could include but is not limited to including, any settlement, compromise or response plan formulated. If the matter remains unresolved, such that City representatives are contacted by the same aggrieved party, or if Contractor shall have rejected the damage claims, then City shall take all reasonable steps to respond to the claim, which may include tendering the damage claim to Contractor pursuant to the Contractor's indemnity clause. Failure of Contractor to be responsive to third party damage claims under this provision may be grounds for breach of contract, wherein remedies of such breach may include but are not limited to withholding of progress payments.

   C. Failure to Maintain Insurance. During the term of this agreement and until final completion and acceptance of the work by the City, the Contractor shall maintain in full force and effect insurance coverage in the forms and amounts specified in the Contract and any Special Provisions. If at any time during the performance of this contract, Contractor fails to maintain any item of required insurance in full force and effect, Contractor shall immediately discontinue all work under the contract and the City will withhold all contract payments due or that become due until notice is received by City that such insurance has been restored in full force and effect and that the premiums therefore have been paid for a period satisfactory to the City. Any delay to

the work or the project shall be borne by and attributable to the Contractor and its failure to maintain or adhere to these insurance requirements.

D. PERS Benefits. In the event that Contractor or any employee, agent, or subcontractor of Contractor providing services under this Agreement is determined by a court of competent jurisdiction or the California Public Employees Retirement System (PERS) to be eligible for enrollment in PERS as an employee of City, Contractor shall indemnify, defend, and hold harmless City for the payment of any employee and/or employer contributions for PERS benefits on behalf of Contractor or its employees, agents, or subcontractors, as well as for the payment of any penalties and interest on such contributions, which would otherwise be the responsibility of the City.

7-5 PERMITS Contractor's attention is directed to Section 7-5 of the Standard Specifications.

In addition to the requirements of Section 7-5, "Permits", of the Standard Specifications, the following requirements shall also apply:

CITY PERMITS: Prior to commencement of work, the Contractor shall obtain all applicable permits from the Building and Safety Services Division of the Community Development Department. Contractor will not be required to pay City permit fees. The following City permits are required:

City Building Permit

OTHER PERMITS: Contractor shall obtain and pay for State and County permits, and permits from other jurisdictions that may be required for the project. Contractor shall pay fees associated with such permits. The following State, County, or other agency permits are required for this project:

None

The Contractor shall be compensated for the actual costs of permits (without mark-up) under this section, as a change order, upon submittal of receipts.

The Contractor shall comply with all conditions set forth in permits and agreements, and shall bear the full costs of all expenses incurred in such compliance.

The Contractor's attention is directed to Section 2-11 of these Special Provisions regarding the responsibility for required permit inspections.

The Contractor represents and warrants to City that Contractor, and all Subcontractors have all licenses, permits, certified qualifications, and approvals of whatsoever nature that are legally required for Contractor to practice Contractor's profession. Contractor represents and warrants to City that Contractor and all Subcontractors shall, at its sole cost and expense, keep in effect at all times during the term of this agreement any licenses, permits, certified qualifications and approvals that are legally required for Contractor to practice its profession.

Failure to submit said documents and/or certifications shall result in delayed acceptance of any associated City project until these documents are submitted. Only certified persons submitted on job site or project shall be shut down.

CITY BUSINESS LICENSE: The Contractor and all listed Subcontractors shall submit evidence of a current City of San Leandro Business License in accordance with Section 6-1 of these Special Provisions.

7-6 THE CONTRACTOR'S REPRESENTATIVE The following paragraphs are added to Section 7-6 of the Standard Specifications:

INDEPENDENT CONTRACTOR: At all times during the term of this agreement, Contractor shall be an independent contractor and shall not be an employee of City. City shall have the right to control Contractor only insofar as the results of Contractor's services rendered pursuant to this agreement.

CONTRACTOR NO AGENT: Except as City may specify in writing, Contractor shall have no authority, expressed or implied, to act on behalf of City in any capacity whatsoever as an agent. Contractor shall have no authority, expressed or implied, pursuant to this agreement to bind City to any obligation whatsoever.

ASSIGNMENT PROHIBITED: No party to this agreement may assign any right or obligation pursuant to this agreement. Any attempted or purported assignment of any right or obligation pursuant to this agreement shall be void and of no effect.

REPRESENTATIVE AT WORK SITE: The Contractor's Representative shall be present and immediately available to the Engineer at the work site whenever work (INCLUDING THAT OF SUBCONTRACTORS) is in progress or whenever actions of the elements necessitate Contractor's presence to take measures necessary to protect the work, persons, or property, or provide for the public's convenience. The Contractor's representative shall have full authority to act on Contractor's behalf and shall be a competent full-time non-working superintendent or non-working foreman, satisfactory to the Engineer, to supervise and be responsible for all Contractor and/or subcontractor crews and shall not be directly involved in the performance of the work or tasks at hand. Individual crew superintendent/foreman and/or working superintendent/foreman will not be acceptable.

At the City's option, work may be suspended until the Contractor has complied with this paragraph. Contractor shall not be due additional compensation or working days due to non-compliance with this paragraph.

7-8 WORK SITE MAINTENANCE The following paragraphs are added to Section 7-8 of the Standard Specifications:

MAINTENANCE REQUIREMENTS: All maintenance requirements, including protection from the elements, site security/protection from vandalism, theft or other cause, shall apply continuously (24 hrs./day, 7 days/week) and shall not be limited to normal working days. Adequate personnel and equipment shall be provided daily. Adjacent properties shall be similarly maintained/protected from the Contractor's operations.

Full compensation for compliance with this Section shall be considered to be included in the contract prices paid for the various items of work and no separate compensation will be made therefore.

The Contractor shall be subject to liquidated damages per Section 6-9, "Liquidated Damages", of these Special Provisions, for failure to follow the stated directives of this section.

7-8.1 GENERAL The following paragraphs are added to Section 7-8.1 of the Standard Specifications:

The Contractor shall install Stabilized Construction Entrance, In accordance with Standard Plan 606, as required to prevent material deposit on roadways.

All excess material shall become the property of the Contractor to be legally disposed of off City property in accordance with Section 7-8.1.1 below.

7-8.1.1 RECYCLING OF CONSTRUCTION MATERIAL The following requirements are added to Section 7-8.1 of the Standard Specifications:

All excess material shall become the property of the Contractor. Such material shall be legally handled, transported, and recycled or disposed of off City property in accordance with Chapter 3-7 of the San Leandro Municipal Code "Construction and Demolition Debris Waste Reduction and Recycling Requirements" that requires projects over $100,000 in value to recycle all asphalt and concrete waste, as well as recycle 50% of the remaining construction debris. (Projects with negligible quantities of debris, or where no local market exists for the materials being generated, may be exempted from these requirements).

For Engineer's Estimates in excess of $100,000, Contractor shall complete and submit the following Debris Recycling Statement. The Debris Recycling Statement shall also be submitted to the Building Regulations Division of the Community Development Department when a building permit is required. See Section 7-5 for required permits.

7-8.1.1 RECYCLING OF CONSTRUCTION MATERIAL The following requirements are added to Section 7-8.1 of the Standard Specifications:

All excess material shall become the property of the Contractor. Such material shall be legally handled, transported, and recycled or disposed of off City property in accordance with Chapter 3-7 of the San Leandro Municipal Code "Construction and Demolition Debris Waste Reduction and Recycling Requirements"

Contractor shall recycle all asphalt and concrete waste, as well as recycle 50% of the remaining construction debris. Contractor shall use one of the following methods to recycle debris:

Separate materials on-site and:

a. Self-haul the materials to a recycling facility -or-
b. Use debris boxes obtained from the City's franchised waste hauler

Do not separate materials:

a. Self-haul mixed loads to a mixed C&D recycling facility -or-
b. Use a debris box obtained from the City's franchised waste hauler (Contractor must inform the hauler of the intent to comply with the City of San Leandro's C&D Ordinance prior to obtaining the box)

Use a State licensed construction clean-up contractor (classification D63) to separate the materials on site and deliver to local recycling facilities.

The following companies are accepted as Mixed C&D recycling facilities for the purpose of this section:

1. Davis Street Transfer Station 2615 Davis St, San Leandro (510) 638-2303	5. Newby Island Landfill 1601 Dixon Landing Rd, Milpitas, (408) 262-1401
2. Fremont Recycling & Transfer Station 41149 Boyce Rd, Fremont, (510) 252-0500	6. Recology of San Francisco 501 Tunnel Ave, San Francisco, (415) 330-1400
3. Vasco Road Landfill & Recycling 4001 N. Vasco Rd, Livermore, (925) 447-0491	7. Zanker Material Processing Facility 675 Los Esteros Rd, San Jose, (408) 263-2384
4. Marin Resource Recovery Center 565 Jacoby St, San Rafael, (415) 485-5646	8. Guadalupe Materials Recovery Facility 15999 Guadalupe Mines Rd, San Jose, (408) 268-1670

The following company is a franchised waste hauler authorized to provide debris boxes within the portion of the City of San Leandro containing this project.

Alameda County Industries (ACI)
510-357-7282
www.alamedacountyindustries.com

Per sections 3-6-320 and 3-6-340 of the San Leandro Municipal Code, contractors cannot obtain construction & demolition (C&D) debris box service from anyone other than the City's franchised waste hauler regardless of whether the material is intended for disposal, recycling, composting or otherwise.

Contractor shall demonstrate compliance with this section by completing and submitting a Waste Management Plan online with Green Halo Systems (www.greenhalosystems.com or at 1-888-525-1301). Contractor shall create an account with Green Halo and enter project information within 30 days of the notice to proceed. Contractor shall upload recycling and disposal receipts at least once every 30 days thereafter. Contractor shall complete and submit the waste management report before asserting project completion.

7-8.1.2 VERMIN CONTROL The following Section is added to Section 7-8.1 of the Standard Specifications:

At the time of acceptance, structures entirely constructed under the Contract shall be free of rodents, insects, vermin, and pests. Necessary extermination work shall be arranged and paid for by the Contractor as part of the work within the contract time, and shall be performed by a licensed exterminator in accordance with requirements of governing authorities. The Contractor shall be liable for injury to persons or property and responsible for the elimination of offensive odors resulting from extermination operations.

7-8.1.3 TEMPORARY LIGHT, POWER AND WATER The following Section is added to Section 7-8.1 of the Standard Specifications:

The Contractor shall furnish, install, maintain, and remove all temporary light, power, and water at its own expense. These include piping, wiring, lamps, and other equipment necessary for the work. The Contractor shall not draw water from any fire hydrant (except to extinguish a fire), without obtaining permission from the water agency concerned.

7-8.2 AIR POLLUTION CONTROL Contractor's attention is directed to Section 7-8.2 of the Standard Specifications:

7-8.3 NOISE CONTROL The following Section is added to Section 7-8 of the Standard Specifications:

The noise level from the Contractor's operations, between the hours of 9:00 p.m. and 6:00 a.m. shall not exceed 89 DBA at a distance of 50 feet. This requirement in no way relieves the Contractor from responsibility for complying with Section 4-1-1115(b) of the San Leandro Municipal Code concerning construction-related noise near residences.

Said noise level requirement shall apply to all equipment on the job or related to the job, including, but not limited to, trucks, transit mixers, or transient equipment that may or may not be owned by the Contractor. The use of loud sound signals shall be avoided in favor of light warnings, except those required by safety laws for the protection of personnel.

7-8.4 STORAGE OF EQUIPMENT AND MATERIALS Storage and exposure of raw material, by-products, finished products, and containers shall be controlled as described below:

All construction materials shall be stored at least ten feet away from inlets, catch basins, and curb returns. The Contractor shall not allow any material to enter the storm drain system. At the end of each working day, the Contractor shall collect and dispose of all scrap, debris, and waste material.

During wet weather or when rain is in forecast, the Contractor shall store materials that can contaminate rainwater or be transported by storm water or other runoff to the storm drain system inside a building or cover them with a tarp or other waterproof material secured with weighted tires or sandbags to prevent contact with rain.

The Contractor's attention is directed to Section 7-10.2 of these Special Provisions regarding storage of materials in public streets.

The Contractor is reminded that storage and disposal of all hazardous materials such as paints, thinners, solvents, and fuel; and all hazardous wastes such as waste oil must meet all federal, state, and local standards and requirements.

7-8.5 SANITARY SEWERS The following is added to Section 7-8.5 of the Standard Specifications:

Contractor is also required to comply with Section 5-2 of these Special Provisions regarding any interruption of sanitary sewer services.

7-8.6 WATER POLLUTION CONTROL The following paragraphs are added to Section 7-8.6 of the Standard Specifications:

7-8.6.1 GENERAL The intent of these requirements is to enforce federal, state, and other local agency regulations that prohibit storm water pollution at construction sites. Storm drains discharge directly to creeks and the San Francisco Bay without treatment, and therefore, discharge of pollutants (i.e., any substance, material, or waste other than uncontaminated storm water) into the storm drain system is strictly prohibited.

The Contractor's attention is directed to Section 7-8.6.4.9 of these Special Provisions.

In this section, the term "storm drain system" shall include storm water conduits, storm drain inlets and other storm drain structures, street gutters, channels, watercourses, creeks, lakes, and the San Francisco Bay.

For the purpose of eliminating storm water pollution, the Contractor shall implement effective control measures at construction sites. There are several publications that provide guidance on selecting and implementing effective control measures known as Best Management Practices (BMPs). BMPs include schedules of activities, prohibition of practices, general good housekeeping practices, operational practices, pollution prevention practices, maintenance procedures, and other management procedures to prevent the discharge of pollutants directly or indirectly to the storm drain system. BMPs also include the construction of some facilities that may be required to prevent, control, and abate storm water pollution.

7-8.6.4 DEWATERING OPERATIONS Prior to discharging into the storm drain system, all rainwater and groundwater removed from the Work site shall be de-silted through filtering materials and methods meeting the Association of Bay Area Governments (ABAG) Standards for Erosion and Sediment Control Measures and/or through methods and procedures described in the California Storm Water Best Management Practice Handbook—Construction Activity (latest edition).

The Contractor shall reuse the water for other needs, such as dust control and irrigation, to the maximum extent practicable.

7-8.6.4.1 PAVEMENT SAW-CUTTING OPERATIONS The Contractor shall prevent any saw-cutting debris from entering the storm drain system. The Contractor, preferably, shall use dry cutting techniques and sweep up residue. If wet methods are used, the Contractor shall vacuum slurry as cutting proceeds or collect all wastewater by constructing a sandbag sediment barrier. The bermed area shall be of adequate size to collect all wastewater and solids. The Contractor shall allow collected water to evaporate if the wastewater volume is minimal and if maintaining the ponding area does not interfere with public use of the street area or create a safety hazard. If approved by the Engineer, the Contractor may direct or pump saw-cutting wastewater to a dirt area and allow to infiltrate. The dirt area shall be adequate to contain all the wastewater. After wastewater has infiltrated, all remaining saw-cutting residue must be removed and disposed of properly. With the approval of the Engineer, de-silted water may be pumped to the sanitary sewer to assist in the evaporation or infiltration process. Remaining silt and debris from the ponding or bermed area shall be removed or vacuumed and disposed of properly. If a suitable dirt area is not available or discharge to the sanitary sewer is not feasible, with the approval of the Engineer, the Contractor shall filter the saw-cutting wastewater through filtering materials and methods meeting ABAG Standards for Erosion and Sediment Control Measures (latest edition) before discharging to the storm drain.

7-8.6.4.2 PAVEMENT OPERATIONS The Contractor shall prevent the discharge of pollutants from paving operations by using measures to prevent run-on and runoff pollution, properly disposing of wastes, and by implementing and following Best Management Practices:

No paving or street sealing during wet weather.

Store materials as required under Sections 7-8.4 and 7-10.2 of these Special Provisions

Cover inlets and manholes when applying asphalt, seal coat, tack coat, slurry seal, fog seal, etc.

Place drip pans or absorbent materials under paving equipment when not in use. During wet weather, store contaminated paving equipment indoors or cover with tarp or other waterproof covering.

Sweep site daily to prevent sand, gravel, or excess asphalt from entering or being transported by rain into the storm drain system.

Keep ample supplies of drip pans or absorbent materials on-site.

If paving involves Portland cement concrete, refer to Section 7-8.6.4.3 of these Special Provisions.

7-8.6.4.3 CONCRETE OPERATIONS The Contractor shall prevent the discharge of pollutants from concrete operations by using measures to prevent run-on and runoff pollution, properly disposing of wastes, and by implementing and following Best Management Practices:

Store all materials in waterproof containers or under cover away from drain inlets or drainage areas.

Avoid mixing excess amounts of Portland cement materials.

Do not wash out concrete trucks into storm drains, open ditches, streets, streams, etc. Whenever possible, perform washout of concrete trucks offsite where discharge is controlled and not permitted to discharge to the storm drain system. For onsite washout:

Locate washout area at least 50 feet from storm drains, open ditches, or other water bodies, preferably in a dirt area. Prevent runoff from this area by constructing a temporary pit or bermed area large enough for the liquid and solid waste.

Wash out concrete wastes into the temporary pit where the concrete can set, be broken up, and then be disposed of properly. If the volume of water is greater than what will allow concrete to set, allow the wash water to infiltrate and/or evaporate, if possible. Otherwise, allow water to settle, filter it, and then pump it to the sanitary sewer with approval from the Engineer. Remove or vacuum the remaining silt and debris from the ponding or bermed area and dispose of it properly.

Dispose of wastewater from washing of exposed aggregate to dirt area. The dirt area shall be adequate to contain all the wastewater, and once the wastewater has infiltrated, any remaining residue must be removed. If a suitable dirt area is not available, then the Contractor shall filter the wash water through straw bales or other filtering materials meeting ABAG Standards for Erosion and Sediment Control Measures before discharging to the sanitary sewer with approval from the Engineer.

Collect and return sweepings from exposed aggregate concrete to a stockpile or dispose of the waste in a trash container.

7-8.6.4.4 GRADING AND EXCAVATION OPERATIONS The Contractor shall take all reasonable and adequate measures to protect the Work and shall exercise sound engineering and construction practices in the conduct of the Work and shall implement sedimentation and erosion control measures to prevent sediments or excavated material from entering the storm drain system. The Work site shall be maintained to facilitate continual drainage avoiding impoundment, ponding or puddling of storm runoff, preventing any damage to excavations, subgrade, or materials incorporated into the Work. Any impounded water shall be immediately pumped from the site in accordance with the following. The Contractor is solely responsible for repairs or replacement for any damage caused by his failure for compliance to this section, including negative impacts to adjacent property.

The erosion and sedimentation control materials and methods shall be in accordance with ABAG Standards for Erosion and Sediment Control Measures and/or the procedures and methods described in the California Storm Water Best Management Practice Handbook—Construction Activity (latest edition).

At a minimum, the Contractor shall install filter materials (such as sandbags, filter fabric, etc.) at the storm drain inlet(s) located in and downstream of the project site between October 15 and April 15, and when rain is forecast within 24 hours. The Contractor shall install filter materials or seal all surface inlet openings during the dry season if there is potential for sediment or excavated material to be discharged to the storm drain system during the construction operation (e.g., sediments and debris tracked by construction vehicles, windblown, or transported by other runoff). The storm drain inlets shall be sealed in such a manner that they can be opened in an emergency and unblocked at the end of each working day so that no property is damaged as a result of accidents or other overflows.

Sedimentation and erosion control/filter materials shall be placed in a manner that will prevent any debris or sediment from flowing into the storm drain system. Said materials or control devices shall also be maintained and/or replaced as necessary to ensure effective sediment control and prevent flooding.

7-8.6.4.5 SPILL PREVENTION AND CONTROL The Contractor shall take any and all precautions to prevent accidental spills during the work under this contract. However, in the event of a spill:

The Contractor shall immediately contain and prevent leaks and spills from entering the storm drain system, and properly clean up and dispose of the waste and clean up materials. If waste is hazardous, the Contractor shall comply with all federal, state, and local hazardous waste requirements.

The Contractor shall not wash any spilled material into the streets, gutters, storm drains, or creeks.

The Contractor shall report any hazardous materials spills immediately to the San Leandro Fire Department, the Alameda County Hazardous Materials Division, and other state and local agencies as required by state and local regulations.

7-8.6.4.6 VEHICLE/EQUIPMENT CLEANING The Contractor shall not perform vehicle or equipment cleaning on-site or in the street using soaps, solvents, de-greasers, steam cleaning equipment, or equivalent methods. The Contractor shall perform vehicle or equipment cleaning with water only in a designated, bermed area that will not allow rinse water to run offsite or into the storm drain system. The rinse water shall be permitted to infiltrate into a dirt area or shall be discharged to the sanitary sewer with the approval of the Engineer.

The Contractor shall dispose of wash water from the cleaning of water based paint equipment and tools in the sanitary sewer.

If using oil based paint, to the maximum extent practicable, the Contractor shall filter the paint thinner and solvents for reuse, and dispose of the waste thinner, solvent, and sludge from cleaning of equipment and tools as hazardous waste.

7-8.6.4.7 CONTRACTOR TRAINING AND AWARENESS The Contractor shall train all employees on the water pollution prevention requirements contained in these specifications. The Contractor shall inform all subcontractors of the water pollution prevention contract requirements and include appropriate subcontract provisions to ensure that these requirements are met.

7-8.6.4.8 GOOD HOUSEKEEPING PRACTICES The Contractor shall implement the following applicable good housekeeping practices:

Store materials that have the potential to be transported to the storm drain system, by storm runoff or by a spill, under cover in a contained area or in sealed waterproof containers.

Use tarps on the ground to collect fallen debris or splatters that could contribute to storm water pollution.

Secure opened bags of cement and of other light or powdered materials that can be transported by wind.

Pick up litter, construction debris, and other wastes daily from outside areas including the sidewalk area, gutter, street pavement, and storm drains impacted by the project. All wastes shall be stored in covered containers or disposed of or recycled immediately.

Dispose of wash water to the sanitary sewer with the approval of the Engineer or recycle wash water. Refer to Section 7-8.6.4.6 of these Special Provisions.

Inspect vehicles and equipment arriving on-site for leaking fluids, and promptly repair leaking vehicles and equipment. Use drip pans to catch leaks until repairs are made.

Avoid spills by handling materials carefully. Keep a stockpile of spill materials, such as rags or absorbents, readily accessible onsite. Clean up all spills immediately to prevent any material from being discharged to the storm drain system. Refer to Section 7-8.6.4.5 of these Special Provisions.

Train employees regularly on good housekeeping practices and BMPs. Assign responsibility to specific employees on BMPs, good housekeeping practices, and what to do in the event of a spill. Refer to 7-8.6.4.7 of these Special Provisions.

Maintain and replace all sediment and water pollution control devices as necessary to ensure that said controls are working effectively (e.g., inspect all sediment ponds or sandbag sedimentation/filtering systems after each rain, and remove accumulated sediment and debris, and replace or repair damaged sandbags immediately).

7-8.6.4.9 DRAINAGE CONTROL The Contractor shall maintain drainage within and through the Work areas. Earth dams will not be permitted in paved areas. Temporary dams of sandbags, asphaltic concrete, or other acceptable material will be permitted when necessary. Such dams shall be removed from the site as soon as their use is no longer necessary. Any impounded water shall be immediately pumped from the site. The Contractor is solely responsible for repairs or replacement for any damage caused by his failure for compliance to this Section.

The Contractor's attention is directed to Section 7-8.6.4.4 of these Special Provisions.

7-8.6.5.1 ENFORCEMENT The City has the authority, through various sections of the San Leandro Municipal Code, to enforce any portion of this Section. City enforcement may include, but is not limited to: citations, orders to abate, bills for City cleanup costs and administration, civil suits, and criminal charges. Enforcement action by the City does not void or suspend any enforcement actions by other agencies.

7-8.6.5 PAYMENT Unless a separate pay item is provided in the bid schedule, full compensation for compliance with this Section shall be considered to be included in the contract prices paid for various items of work and no separate compensation will be made therefore.

The Contractor shall be subject to liquidated damages per Section 6-9, "Liquidated Damages", of these Special Provisions for failure to follow the stated directives of this Section.

7-9 PROTECTION AND RESTORATION OF EXISTING IMPROVEMENTS

The following is added to section 7-9 of the Standard Specifications.

Contractor shall not remove any parking meters with his forces. If the work requires removal of any parking meters, Contractor shall give the Engineer a written request indicating which meters are to be removed. City will remove the meters within 72 hours of receiving the notice. City shall only remove the head. Contractor shall remove the pole, base, and foundation (if any).

7-10 PUBLIC CONVENIENCE AND SAFETY

7-10.1 TRAFFIC AND ACCESS The Contractor's attention is directed to Standard Plan 610 showing truck routes in the City of San Leandro.

The following paragraph is added to Section 7-10.1 of the Standard Specifications:

Contractor shall not obstruct public pedestrian pathways with construction material or equipment.

7-10.1.1 PEDESTRIAN ACCESS Pedestrian travel shall be maintained at all times along both sides of the street (or streets) under construction. All temporary pedestrian walkways shall be at least 4 feet wide and fully accessible to handicapped pedestrians in accordance with the Americans with Disabilities Act and California Title 24. In all cases, pedestrian walkways shall be separated from vehicular travel by a clear area of at least 6 feet, or in locations where 6 feet of horizontal separation for pedestrian traffic is not feasible, by raised curb, a raised wooden walkway with standard railings, or by K rails. This condition may be modified or waived by the Engineer upon written request by the Contractor. Provisions to activate pedestrian signal indications will be made in all instances where pedestrian access to the existing pedestrian push-button cannot be maintained. Existing lighting levels in the area prior to construction shall be maintained during construction.

Full compensation for compliance with this section shall be considered to be included in the contract price for traffic control and no separate payment will be made therefore. When the contract does not include a contract pay item for traffic control, full compensation for compliance with this section shall be

considered to be included in the prices for the various contract items of work involved and no additional compensation will be allowed therefore.

7-10.2 STORAGE OF EQUIPMENT AND MATERIALS IN PUBLIC STREETS Construction materials shall not be stored in streets, roads, highways, or on public property. All materials or equipment used in construction shall be stored elsewhere by the Contractor at its expense. All materials shall be stored in accordance with Section 7-8.4 of these Special Provisions.

Construction equipment shall not be stored at the work site except during its actual use on the work. Excavated material shall not be stored in public streets unless otherwise permitted. All excess material shall be removed immediately from the site.

Full compensation for conforming to the requirements of this section shall be considered to be included in the prices paid for the various contract items of work involved and no additional compensation will be allowed therefore.

7-10.2.1 CONSTRUCTION STAGING/STOCKPILE LOCATION: A staging area has been provided for the contractor as shown on the plans for equipment storage, stockpiling materials, and other construction related activities.

Access by City maintenance and emergency vehicles to the project site shall be maintained at all times. Contractor is solely responsible for the security of all construction materials and equipment placed on City property. Contractor shall maintain such staging areas in a clean, safe, and secure manner as required by other sections of these special provisions. Failure to comply with such standards may result in the City revoking the right of the contractor to use such property

7-10.3 STREET CLOSURES, DETOURS, AND BARRICADES The following paragraphs are added to Section 7-10.3 of the Standard Specifications:

7-10.3.1 RESTRICTED PARKING The Contractor may establish "No Parking" zones contiguous to the work area by posting signs supplied by the City as follows:

- Only City signs, marked with broad tip marker pen.
- Signs shall be placed at less than 100-foot spacings.
- Signs shall be placed a minimum of 72 hours, and a maximum of 96 hours, in advance of the required restriction period.
- Signs shall be accurately dated ONLY for the actual duration of the specific task(s) at hand.
- Signs shall be placed ONLY along frontages directly affected by the work or as required for public safety.
- Signs shall be re-posted/re-dated immediately due to revisions of schedule, including changes caused by inclement weather.
- Signs and barricades shall be removed immediately upon expiration of the dated duration of the work.

The City will enforce parking restrictions ONLY when the Contractor has properly posted the signs and has notified the Engineer a minimum of 72 hours in advance of the requested restriction period.

7-10.3.2 STREET CLOSURES AND ACCESS Access for local residents and businesses and all private property shall be maintained at all times. Signs indicating "Open for Business" shall be placed in front of commercial and industrial driveways to allow continual access. At the end of each working day, these streets shall be reopened to through traffic with proper barricades, warning devices, and temporary

striping. The Contractor shall furnish and maintain all signs, lights, barricades, and flaggers necessary as determined by the Engineer. If these streets are closed, the Contractor shall proceed expeditiously and with consideration for public convenience from the start of work to its completion.

No public street closures are allowed on this project except for the stretch of Lafayette Avenue north of California Avenue extending to Toler Avenue. With prior City approval, this section of street may be closed for use of a lifting crane at the back of the Public Safety Building to removed existing louvers and place new equipment in the second floor mechanical room.

Lane closures shall conform shall be in accordance with the requirements of these Special Provisions, and the Lane Closure chart(s) below:

CHART NO. 1

LOCATION: Lafayette Avenue (Between California and Toler Avenues)													**DIRECTION OF TRAVEL:** Northbound / Southbound											
FROM	**a.m.**												**p.m.**											
HOUR to HOUR	**12**	**1**	**2**	**3**	**4**	**5**	**6**	**7**	**8**	**9**	**10**	**11**	**12**	**1**	**2**	**3**	**4**	**5**	**6**	**7**	**8**	**9**	**10**	**11**
Mondays through Thursdays	X	X	X	X	X	X	X	W	W	0	0	0	0	0	0	0	W	W	X	X	X	X	X	X
Fridays	X	X	X	X	X	X	X	W	W	0	0	0	0	0	0	0	W	W	X	X	X	X	X	1
Saturdays	X	X	X	X	X	X	X	X	X	X	X	X	X	X	X	X	X	X	X	X	X	X	X	X
Sundays	X	X	X	X	X	X	X	X	X	X	X	X	X	X	X	X	X	X	X	X	X	X	X	X

Flashing Arrow Board Required (mark one): **YES** ☐ **NO** ☒

LEGEND:

0 - Roadway may be closed in direction of travel.
1 - Provide at least one through lane open in direction of travel.
2 - Provide at least two through lanes open in direction of travel.
3 - Provide at least three through lanes open in direction of travel.
W - No lane closure permitted; work permitted anywhere that does not require lane closure.
X - No lane closure permitted; no work permitted on roadway.

REMARKS: Street closure is allowed for necessary lifting crane work only, not general construction activities. Emergency egress from back exit door at northeast corner of Public Safety Building to remain clear and passable at all times. Nearby parking lot driveway north of California street to remain open at all times. 5 working day notice to City required prior to any closure.

Approved by Traffic Operations Engineer: **Date:** 7/30/2014

Note: Minor deviations from the requirements of this section concerning lane closure hours that do not change the cost of the work may be permitted written request of the Contractor, if in the sole opinion of the Engineer, public traffic will be better served and the work expedited. These deviations be adopted by the Contractor until the Engineer has approved the deviations in writing.

7-10.3.3 TRAFFIC CONTROL PLAN REQUIREMENTS The Contractor shall submit Traffic Control Plan(s) conforming to the 2012 California Manual on Uniform Traffic Control Devices for Streets and Highways (2012 CA MUTCD), and the requirements of these Special Provisions for acceptance by the Engineer. The submittal of Traffic Control Plans shall conform to the requirements of Section 2.5.3, "Submittals".

A detailed traffic control plan is required for work being performed on a roadway listed in the City's Standard Plans No. 608A, B and C, or if required in a lane closure chart. If a roadway is not listed, a formal plan submittal is not required; however, all temporary traffic controls must conform to all other requirements of this section.

Unless otherwise provided for in the specifications, the Contractor shall provide:

- A minimum of one paved traffic lane, which shall not be less than ten (10) feet in width for use by public traffic unless otherwise approved by the Engineer.
- All work shall be phased to allow adequate parking within 1,000 feet of each residential unit, each industrial unit, and each commercial unit.
- All work on arterial and collector streets and streets with industrial and commercial uses shall be phased longitudinally (1/2 street closed at a time).
- No two adjacent streets shall be closed or parking restricted at the same time.

Except as otherwise provided in the lane closure chart(s):

- No work that interferes with public traffic on collector and arterial roadways shall be performed between the hours of 6:00 a.m. to 9:00 a.m., nor between 3:00 p.m. and 6:00 p.m., unless approved by the Engineer.
- The full width of the traveled way shall be open for use by public traffic on Saturdays, Sundays, and designated legal holidays; after 3:00 p.m. on Fridays, and the day proceeding designated legal holidays; and when construction operations are not actively in progress, unless approved by the Engineer.

7-10.3.4 IMPLEMENT TRAFFIC CONTROL The Contractor shall notify the San Leandro Police Department (510) 577-3208, Alameda County Fire Department (510) 670-5858, Paramedics Plus (510) 746-5700, and, if applicable, A. C. Transit (510) 891-4901, daily of closures, detours, etc.

The Contractors attention is directed to City Standard Plan 610 for the City of San Leandro Truck Route Map.

The Contractor shall furnish and maintain all signs, lights, barricades, and flaggers necessary as determined by the Engineer. Flaggers shall be trained in the proper fundamentals of flagging traffic before being assigned as flaggers and shall perform their duties in accordance with the 2012 CA MUTCD and shall be so certified in accordance with California Code of Regulations (CCR), Title 8, Section 1599.

Traffic control devices shall conform to the 2012 CA MUTCD. Any signs or other protective devices furnished and erected by the Contractor, as above provided, shall not obscure the visibility of, nor conflict in intent, meaning, and function of either existing signs, lights, and traffic control devices for which furnishing of or payment for, is provided elsewhere in the specifications. Signs furnished and erected by the Contractor at Contractor's expense shall be approved by the Engineer as to size, wording, and

location. All signs and traffic control devices shall be removed immediately upon completion, and any improvements restored to their original conditions.

Construction equipment shall enter and leave the construction area in the direction of public traffic. All movements of workers and construction equipment on or across lanes open to public traffic shall be performed in a manner that will not endanger the public.

When traffic cones or delineators are used to delineate a temporary edge of traffic lane, the line of cones or delineators shall be considered to be the edge of traffic lane, however, the Contractor shall not reduce the width of an existing lane to less than ten (10) feet without written approval from the Engineer. The lane closure provisions of this section shall not apply if the work area is protected by permanent or temporary railing or barrier.

When work is not in progress on a trench or other excavation that requires a lane closure, the traffic cones or portable delineators used for the lane closure shall be placed off of and adjacent to the edge of the traveled way. The spacing of the cones or delineators shall be not less than the spacing used for the lane closures.

All barricades shall have operating warning lights. Barricades shall be placed twenty (20) feet center-to-center maximum.

If a hazardous condition is observed and the City notifies the Contractor either directly or by telephone, the Contractor shall correct the condition immediately. If the Contractor fails to correct the hazardous condition immediately, the City reserves the right to install or have installed the necessary traffic control devices. The cost involved shall be deducted from any money due or to become due to the Contractor.

Full compensation for compliance with this section shall be considered as included in the contract price paid for traffic control and/or construction area signs and no separate payment will be made therefore. When the contract does not include a contract pay item for traffic control, and/or construction area signs, full compensation for any necessary traffic control and/or construction area signs shall be considered as included in the prices for the various contract items of work involved and no additional compensation will be allowed therefore.

Failure to provide a Traffic Control Plan prior to commencing work or failure to adhere to the accepted Traffic Control Plan shall subject Contractor to liquidated damages in accordance with Section 6-9, "Liquidated Damages", of these Special Provisions.

7-10.4 PUBLIC SAFETY In addition to the requirements of Section 7-10.4 of the Standard Specifications, the following shall also be required of the Contractor:

It is the Contractor's responsibility to provide for the safety of traffic and the public.

Whenever the Contractor's operations create a condition hazardous to traffic or to the public, Contractor shall, at its sole expense, furnish, erect, and maintain such fences, temporary railing, barricades, lights, signs, and other devices, and take such other protective measures as are necessary to prevent accidents, damage, or injury to the public. Such fences, temporary railing, barricades, lights, signs, and other devices furnished, erected, and maintained by the Contractor, at Contractor's expense, are in addition to any construction area traffic control devices for which payment is provided for elsewhere in the Specifications.

In addition to any other measure taken by the Contractor pursuant to the provisions of this section, the Contractor shall install temporary railing (Type K) between any lanes carrying public traffic and any excavation, obstacle, or storage area when the following conditions exist:

1. Excavations. Any excavation the near edge of which is six feet (6') or less from the edge of the lane, except:

   A. Excavations covered with sheet steel or concrete covers of adequate thickness to prevent accidental entry to traffic or the public;

   B. Excavations less than six inches (6") in depth;

   C. Trenches less than one foot (1') wide for irrigation pipe or electrical conduit or other pipelines less than one foot (1') in diameter;

   D. Excavations parallel to the lane for the purpose of pavement widening or reconstruction open for less than seven (7) calendar days;

   E. Excavations in side slopes, where the slope is 4:1 (Horizontal:Vertical) or flatter;

   F. Excavations protected by existing barrier or railing.

2. Temporarily Unprotected Permanent Obstacles. Whenever the work includes the installation of a fixed obstacle together with a protective system, such as a sign structure together with protective railing, and the Contractor elects to install the obstacle prior to installing the protective system; or whenever the Contractor, for Contractor's convenience and with permission of the Engineer, removes a portion of an existing protective railing at an obstacle and does not replace such railing complete in place during the same day.

3. Storage Areas. Whenever material or equipment is stored within 12 feet (12') of the lane and such storage is not otherwise prohibited by the specifications.

7-10.4.1 SAFETY ORDERS The following paragraph is added to Section 7-10.4.1 of the Standard Specifications:

Notwithstanding any provisions of the Standard Specifications and the Special Provisions, the Contractor shall be solely responsible for conditions at the job site, including safety of all persons and property during performance of the work. This requirement will apply continuously and will not be limited to normal working hours. Safety and sanitary provisions shall conform to applicable Federal, State, County, and local laws, regulations, ordinances, standards, and codes. Where any of these are in conflict, the more stringent requirement shall be followed.

7-10.4.5 INJURY AND ILLNESS PREVENTION PROGRAM The following section is added to the Standard Specifications:

To the fullest extent legally required and applicable, Contactor shall have an Injury and Illness Prevention Program (IIPP) that conforms to all applicable federal, state and local laws, and shall provide a copy of its current version to the City upon request.

SECTION 8 - FACILITIES FOR AGENCY PERSONNEL

Contractor's attention is directed to Section 8, "Facilities for Agency Personnel", of the Standard Specifications.

8-1 General

8-1 GENERAL The following paragraph is added to Section 8-1 of the Standard Specifications:

The Engineer must be given full access to any Contractor-provided facilities located on the project site at all times. The Contractor has no expectation of privacy with respect to these facilities.

SECTION 9 - MEASUREMENT AND PAYMENT

Contractor's attention is directed to Section 9, "Measurement and Payment", of the Standard Specifications.

9-3 Payments
9-3.1 General
9-3.2 Partial And Final Payment
9-3.3 Delivered Materials
9-3.4 Mobilization
9-3.5 Audit And Examination Of Records
9-4 False Claims Act Certification

9-3 PAYMENTS

9-3.1 GENERAL

PARAGRAPH 8 OF SECTION 9-3.1 IS REVISED AS FOLLOWS:

All guarantee periods shall commence on the date the Notice of Completion is recorded with the Alameda County Recorder's Office.

Paragraph 10 of Section 9-3.1 is revised as follows:

At the expiration of 35 days from the date of recordation of the Notice of Completion by City, or within the time period specified in Public Contracts Code Section 7107, the amount deducted from the final estimate and retained by the City will be paid to the Contractor, except such amounts as are required by law to be withheld by properly executed and filed notices to stop payment, or as may be authorized by the contract to be further retained.

9-3.1.1 Final Pay Items Section 9-3.1.1 is added to the Standard Specifications thus:

Items of work designated on the unit price schedule as (F) or "Final Quantity" are designated as Final Pay items.

Payment equal to the total price in the Contract Price Schedule for Final Pay items will be the total payment made for the work described in the plans and specifications, regardless of whether or not the quantity of the actual work equals the estimated quantity in the contract price schedule.

The Engineer reserves the right to make changes to the plans and specifications in accordance with Section 3-2.1.1 CHANGES INITIATED BY THE CITY. If a change in the Contract Documents results in a change in dimensions of work that includes a Final Pay item, then the total payment for that item will be adjusted either upward or downward by the product of the unit price bid and the change in quantity of the item due to the change in dimensions.

9-3.2 PARTIAL AND FINAL PAYMENT The following paragraphs are added to Section 9-3.2 of the Standard Specifications:

PARTIAL PAYMENT: No payments shall be required to be made when, in the judgment of the Engineer, the:

- Work is not proceeding in accordance with the provisions of the contract, updated construction schedules, and traffic control plans;
- Updated record drawings are not provided with the application for payment;
- Contractor or subcontractors have not provided proof of valid City of San Leandro Business Licenses;
- Certified Payrolls are not provided per Section 7-2.2.4;
- Total value for the work done since the last payment amounts to less than $1,000;
- Contractor has not submitted a request for payment.

Reduction of monies retained from 10 percent (10%) to 5 percent (5%) of work completed will only be made upon satisfactory completion of 50 percent (50%) of the project work (based on total project cost) and upon the written request of the Contractor, and shall be approved in writing by the surety on the Performance Bond and by the surety on the Payment Bond. The approval of the surety shall be submitted to the Engineer; the signature of the person executing the approval for the surety shall be properly acknowledged; and the power of attorney authorizing them to give such consent must either accompany the document or be on file with the City.

FINAL PAYMENT: After acceptance by the Engineer, pursuant to Section 6-8 of the Standard Specifications, the City shall prepare a proposed Final Agreement of Quantities for the total amount payable to the Contractor, including therein an itemization of said amount, segregated as to contract item quantities, extra work, and any other basis for payment. All prior payments shall be subject to correction in the proposed Final Agreement of Quantities. Within thirty (30) days after said proposed Final Agreement of Quantities has been submitted to Contractor, the Contractor shall submit to the Engineer the written approval of said proposed Final Agreement of Quantities or a written statement of all claims Contractor has arising under or by virtue of the contract. No claim will be considered that was not included in said written statement of claims, nor will any claim be allowed for which a notice or protest is required under the provisions of the contract, unless the Contractor has complied with the notice or protest requirements in said contract.

Thirty-five (35) days after the recordation of the Notice of Completion, the City will pay the entire sum found due based on the proposed Final Agreement of Quantities submitted to the Contractor. Such Final Agreement of Quantities and payment thereon shall be conclusive and binding against both parties to the contract on all questions relating to the amount of work done and the compensation payable therefore.

If the Contractor within said period of thirty (30) days files claims, the Engineer will issue a semifinal estimate in accordance with the proposed Final Agreement of Quantities submitted to the Contractor and pay the sum so found to be due. Such semifinal estimate and payment thereon shall be conclusive and binding against both parties to the contract on all questions relating to the amount of work done and the compensation payable therefore, except insofar as affected by the claims filed within the time and in the manner required.

The claims filed by the Contractor shall be in sufficient detail to enable the Engineer to ascertain the basis and amount of said claims. The Engineer will consider and determine the Contractor's claims and it will be the responsibility of the Contractor to furnish within a reasonable time such further information and

details as may be required by the Engineer to determine the facts or contentions involved in the claims. Failure to submit such information and details will be sufficient cause for denying the claims.

The Engineer will make the final determination of any claims that remain in dispute after completion of claim review and make a written recommendation thereon. The Contractor may meet with the Engineer to make a presentation in support of such claims. If any claims remain in dispute, they shall be handled in accordance with Section 3-5, "Disputed Work".

9-3.3 DELIVERED MATERIALS Section 9-3.3 of the Standard Specification is replaced as follows:

The cost of materials and equipment purchased and not incorporated into the work shall NOT be reimbursed.

9-3.4 MOBILIZATION The following paragraphs are added to Section 9-3.4 of the Standard Specifications.

Mobilization shall consist of preparatory work and operations, including, but not limited to, those necessary for the movement of personnel, equipment, supplies, and incidentals to the project site; for the establishment of all offices, buildings, and other facilities necessary for work on the project; and for all other work and operations that must be performed or costs incurred prior to beginning work on the various contract items on the project site.

When the contract has a lump sum price paid for mobilization, it shall include full compensation for furnishing all labor, materials, tools, equipment, and incidentals, and for doing all the work involved in mobilization as specified above. Partial payments for mobilization shall be made as follows:

1. When the monthly partial payment estimate of the amount earned, not including the amount earned for mobilization, is 5 percent (5%) or more of the original contract amount, 50 percent (50%) of the contract item price for mobilization or 5 percent (5%) of the original contract amount, whichever is the lesser, will be included in said estimate for payment.

2. When the monthly partial payment estimate of the amount earned, not including the amount earned for mobilization, is 10 percent (10%) or more of the original contract amount, the total amount earned for mobilization shall be 75 percent (75%) of the contract item price for mobilization, or 7.5 percent (7.5%) of the original contract amount, whichever is lesser, and said amount will be included in said estimate for payment.

3. When the monthly partial payment estimate of the amount earned, not including the amount earned for mobilization, is 20 percent (20%) or more of the original contract amount, the total amount earned for mobilization shall be 95 percent (95%) of the contract item price for mobilization, or 9.5 percent (9.5%) of the original contract amount, whichever is the lesser, and said amount will be included in said estimate for payment.

4. When the monthly partial payment estimate of the amount earned, not including the amount earned for mobilization, is 50 percent (50%) or more of the original contract amount, the total amount earned for mobilization shall be 100 percent (100%) of the contract item price for mobilization, or 10 percent (10%) of the original contract amount, whichever is lesser, and said amount will be included in said estimate for payment

5. After acceptance of the contract pursuant to Section 6-8 of the Standard Specifications, the amount, if any, of the contract item price for mobilization in excess of 10 percent (10%) of the original contract amount will be included for payment in accordance with said Section 9-3.2 of the Special Provisions.

6. When the contract does not include a contract pay item for mobilization, full compensation for any necessary mobilization required shall be considered to be included in the prices for the various contract items of work involved and no additional compensation will be allowed therefore.

9-3.5 AUDIT AND EXAMINATION OF RECORDS The City may examine and audit at no additional cost to the City all books, estimates, records, contracts, documents, bid documents, bid cost data, subcontract job cost reports, and other project-related data of the Contractor, subcontractors engaged in performance of the work, and suppliers providing supplies, equipment, and other materials required for the work, including computations and projections related to bidding, negotiating, pricing, or performing the work or contract modifications and other materials concerning the work, including, but not limited to, Contractor daily logs, in order to evaluate the accuracy, completeness, and currency of cost, pricing, scheduling, and any other project related data. The Contractor will make available all such project-related data during regular business hours for examination, audit, or reproduction at the Contractor's business office at or near the work site, and at any other location where such project-related data may be kept until three (3) years after final payment under the agreement. Pursuant to California Government Code Section 8546.7, if the amount of public funds to be expended is in excess of $10,000, this agreement shall be subject to the examination and audit of the State Auditor, at the request of the City, or as part of any audit of the City, for a period of three (3) years after final payment under the agreement.

9-4 FALSE CLAIMS ACT CERTIFICATION All requests for payment submitted by the Contractor, and any claim for additional compensation must be accompanied by the following declaration:

"I, _____, being the _____ of _____ (Contractor), declare under penalty of perjury under the laws of the State of California, and do personally certify and attest that: I have thoroughly reviewed the attached request for payment and know its contents, and said request for payment is made in good faith; that it is supported by truthful and accurate data; that the amount requested and accurately reflects the allowable expenses that were incurred; and further, that I am familiar with California Penal Code Section 72 and California Government Code Section 12650, et seq., pertaining to false claims, and further know and understand that submission or certification of a false claim may lead to fines, imprisonment, or other severe legal consequences."

PARTS 2 AND 3 – TECHNICAL SPECIFICATIONS

Materials and methods for all work performed under this contract shall conform with the following project technical specifications.

SECTION	DESCRIPTION
DIVISION 02	
02 4100	Demolition
DIVISION 09	**FINISHES**
09 9000	Painting and Coating
DIVISION 23	**HEATING, VENTILATION AND AIR CONDITIONING (HVAC)**
23 0001	General Mechanical Requirements
23 0002	Equipment
23 0513	Common Motor Requirements
23 0519	Meters and Gages for HVAC and Plumbing Piping
23 0548	Vibration Isolation
23 0553	Identification for Piping and Equipment
23 0593	Testing, Adjusting, and Balancing
23 0713	Duct Insulation
23 0719	Piping Insulation
23 2113	Hydronic Piping
23 2114	Hydronic Specailties
23 3100	Ducts and Plenum Casings
23 3300	Air Duct Accessories
23 3416	Centrifugal HVAC Fans
DIVISION 26	**ELECTRICAL**
26 0501	Minor Electrical Demolition
26 0510	Electrical General Provisions
26 0512	Basic Materials and Methods
26 0529	Hangers and Supports for Electrical Systems
26 0802	Electrical Acceptance Testing
26 2923	Variable Frequency Drives
26 5100	Interior Lighting

Project Title: Public Safety HVAC Equipment Replacement

COSL Project No. 2013.0290

The Drawings and Specifications for the above project have been prepared by or under the direction of the following registered professionals:

Carl Crizer, Registered Mechanical Engineer
Salas O'Brien

SECTION 02 4100
DEMOLITION

PART 1 GENERAL

1.01 SECTION INCLUDES

A. Building demolition excluding removal of hazardous materials and toxic substances.

B. Selective demolition of built site elements.

C. Selective demolition of building elements for alteration purposes.

1.02 REFERENCE STANDARDS

A. 29 CFR 1926 - U.S. Occupational Safety and Health Standards; current edition.

B. NFPA 241 - Standard for Safeguarding Construction, Alteration, and Demolition Operations; 2013.

PART 3 EXECUTION

2.01 SCOPE

A. Remove all piping, ducts, fixtures, equipment, etc. where indicated on demolition drawings. All items will be disposed of by the contractor at their expense. Remove all hangers and brackets related to the items being removed. Where a system is being removed, remove all ducts, pipes, conduits, controls, labels, and accessories related to that system unless directed otherwise in the contract documents. Systems not specifically called out to be removed shall not be disturbed. When systems are identified to be removed (or remain), the drawings may not show each and every component of that system. The contractor shall be responsible for tracing out and identifying the various elements of a particular system. The contractor shall provide personnel with the training and experience required to trace out and identify the affected systems. Unrelated systems that are affected by the contractor's removal work shall be restored at the contactor's expense.

2.02 GENERAL PROCEDURES AND PROJECT CONDITIONS

A. Comply with applicable codes and regulations for demolition operations and safety of adjacent structures and the public.
   1. Obtain required permits.
   2. Take precautions to prevent catastrophic or uncontrolled collapse of structures to be removed; do not allow worker or public access within range of potential collapse of unstable structures.
   3. Provide, erect, and maintain temporary barriers and security devices.
   4. Use physical barriers to prevent access to areas that could be hazardous to workers or the public.
   5. Conduct operations to minimize effects on and interference with adjacent structures and occupants.
   6. Do not close or obstruct roadways or sidewalks without permit.
   7. Conduct operations to minimize obstruction of public and private entrances and exits; do not obstruct required exits at any time; protect persons using entrances and exits from removal operations.
   8. Obtain written permission from owners of adjacent properties when demolition equipment will traverse, infringe upon or limit access to their property.

B. Do not begin removal until receipt of notification to proceed from The City.

C. Protect existing structures and other elements that are not to be removed.
   1. Provide bracing and shoring.
   2. Prevent movement or settlement of adjacent structures.
   3. Stop work immediately if adjacent structures appear to be in danger.

D. Minimize production of dust due to demolition operations; do not use water if that will result in ice, flooding, sedimentation of public waterways or storm sewers, or other pollution.

E. If hazardous materials are discovered during removal operations, stop work and notify the city; hasardous materials include regulated asbestos containing materials, lead, PCB's, and mercury.

F. Hazardous Materials: Comply with 29 CFR 1926 and state and local regulations.

2.03 EXISTING UTILITIES

A. Coordinate work with utility companies; notify before starting work and comply with their requirements; obtain required permits.

B. Protect existing utilities to remain from damage.

C. Do not disrupt public utilities without permit from authority having jurisdiction.

D. Do not close, shut off, or disrupt existing life safety systems that are in use without prior written notification to The City.

E. Do not close, shut off, or disrupt existing utility branches or take-offs that are in use without prior notification to The City.

F. Locate and mark utilities to remain; mark using highly visible tags or flags, with identification of utility type; protect from damage due to subsequent construction, using substantial barricades if necessary.

G. Remove exposed piping, valves, meters, equipment, supports, and foundations of disconnected and abandoned utilities.

2.04 SELECTIVE DEMOLITION FOR ALTERATIONS

A. Drawings showing existing construction and utilities are based on casual field observation and existing record documents only.
   1. Verify that construction and utility arrangements are as shown.
   2. Report discrepancies to Engineer before disturbing existing installation.
   3. Beginning of demolition work constitutes acceptance of existing conditions that would be apparent upon examination prior to starting demolition.

B. Remove existing work as indicated and as required to accomplish new work.
   1. Remove items indicated on drawings.

C. Services (Including but not limited to HVAC, Plumbing, and Electrical): Remove existing systems and equipment as indicated.
   1. Maintain existing active systems that are to remain in operation; maintain access to equipment and operational components.
   2. Where existing active systems serve occupied facilities but are to be replaced with new services, maintain existing systems in service until new systems are complete and ready for service.
   3. Verify that abandoned services serve only abandoned facilities before removal.
   4. Remove abandoned pipe, ducts, conduits, and equipment, including those above accessible ceilings; remove back to source of supply where possible, otherwise cap stub and tag with identification.

D. Protect existing work to remain.
   1. Prevent movement of structure; provide shoring and bracing if necessary.
   2. Perform cutting to accomplish removals neatly and as specified for cutting new work.
   3. Repair adjacent construction and finishes damaged during removal work.
   4. Patch as specified for patching new work.

2.05 DEBRIS AND WASTE REMOVAL

A. Remove debris, junk, and trash from site.

B. Leave site in clean condition, ready for subsequent work.

C. Clean up spillage and wind-blown debris from public and private lands.

END OF SECTION

SECTION 09 9000
PAINTING AND COATING

PART 1 GENERAL

1.01 SECTION INCLUDES

A. Surface preparation.

B. Field application of paints and other coatings.

C. Scope: Finish all interior and exterior surfaces exposed to view, unless fully factory-finished and unless otherwise indicated, including the following:
   1. Prime surfaces to receive wall coverings.

D. Do Not Paint or Finish the Following Items:
   1. Items fully factory-finished unless specifically so indicated; materials and products having factory-applied primers are not considered factory finished.
   2. Items indicated to receive other finishes.
   3. Items indicated to remain unfinished.
   4. Fire rating labels, equipment serial number and capacity labels, and operating parts of equipment.
   5. Stainless steel, anodized aluminum, bronze, terne, and lead items.
   6. Marble, granite, slate, and other natural stones.
   7. Floors, unless specifically so indicated.
   8. Ceramic and other tiles.
   9. Brick, architectural concrete, cast stone, integrally colored plaster and stucco.
   10. Glass.
   11. Acoustical materials, unless specifically so indicated.
   12. Concealed pipes, ducts, and conduits unless otherwise noted.

1.02 RELATED REQUIREMENTS

A. Section 22 0553 - Identification for Piping and Equipment: Color coding scheme for items to be painted under this section.

1.03 REFERENCE STANDARDS

A. 40 CFR 59, Subpart D - National Volatile Organic Compound Emission Standards for Architectural Coatings; U.S. Environmental Protection Agency; current edition.

1.04 SUBMITTALS

A. Product Data: Provide data on all finishing products, including VOC content.

B. Samples: Submit two painted samples, illustrating selected colors and textures for each color and system selected with specified coats cascaded. Submit on tempered hardboard,

C. Certification: By manufacturer that all paints and coatings comply with VOC limits specified.

D. Certification: By manufacturer that all paints and coatings do not contain any of the prohibited chemicals specified; GreenSeal GS-11 certification is not required but if provided shall constitute acceptable certification.

E. LEED Report: VOC content of all interior opaque coatings actually used.

F. Manufacturer's Instructions: Indicate special surface preparation procedures.

1.05 QUALITY ASSURANCE

A. Applicator Qualifications: Company specializing in performing the type of work specified with minimum three years experience.

1.06 DELIVERY, STORAGE, AND HANDLING

A. Deliver products to site in sealed and labeled containers; inspect to verify acceptability.

B. Container Label: Include manufacturer's name, type of paint, brand name, lot number, brand code, coverage, surface preparation, drying time, cleanup requirements, color designation, and instructions for mixing and reducing.

C. Paint Materials: Store at minimum ambient temperature of 45 degrees F (7 degrees C) and a maximum of 90 degrees F (32 degrees C), in ventilated area, and as required by manufacturer's instructions.

1.07 FIELD CONDITIONS

A. Do not apply materials when surface and ambient temperatures are outside the temperature ranges required by the paint product manufacturer.

B. Follow manufacturer's recommended procedures for producing best results, including testing of substrates, moisture in substrates, and humidity and temperature limitations.

C. Provide lighting level of 80 ft candles (860 lx) measured mid-height at substrate surface.

PART 2 PRODUCTS

2.01 MANUFACTURERS

A. Provide all paint and coating products used in any individual system from the same manufacturer; no exceptions.

B. Provide all paint and coating products from the same manufacturer to the greatest extent possible.

C. Paints:
   1. Kelly Moore Paint Company: www.kellymoore.com.
   2. Or Approved Equal

D. Floor Coatings:
   1. Aquapond by Pittsburg Paints: www.ppgpittsburghpaints.com.
   2. Or Approved Equal.

2.02 PAINTS AND COATINGS - GENERAL

A. Paints and Coatings: Ready mixed, unless intended to be a field-catalyzed coating.
   1. Provide paints and coatings of a soft paste consistency, capable of being readily and uniformly dispersed to a homogeneous coating, with good flow and brushing properties, and capable of drying or curing free of streaks or sags.
   2. Provide materials that are compatible with one another and the substrates indicated under conditions of service and application, as demonstrated by manufacturer based on testing and field experience.
   3. Supply each coating material in quantity required to complete entire project's work from a single production run.
   4. Do not reduce, thin, or dilute coatings or add materials to coatings unless such procedure is specifically described in manufacturer's product instructions.
   5. Metal shall be painted with Rustoleum #5381 (grey primer) and Rustoleum #5300 (water based epoxy) or approved equal.

B. Primers: Where the manufacturer offers options on primers for a particular substrate, use primer categorized as "best" by the manufacturer.

C. Volatile Organic Compound (VOC) Content:
   1. Provide coatings that comply with the most stringent requirements specified in the following:
      a. 40 CFR 59, Subpart D--National Volatile Organic Compound Emission Standards for Architectural Coatings.
      b. Ozone Transport Commission (OTC) Model Rule, Architectural, Industrial, and Maintenance Coatings; www.otcair.org; specifically:
         1) Opaque, Flat: 50 g/L, maximum.
         2) Opaque, Nonflat: 150 g/L, maximum.
         3) Opaque, High Gloss: 250 g/L, maximum.

c. Architectural coatings VOC limits of California.

2. Determination of VOC Content: Testing and calculation in accordance with 40 CFR 59, Subpart D (EPA Method 24), exclusive of colorants added to a tint base and water added at project site; or other method acceptable to authorities having jurisdiction.

D. Flammability: Comply with applicable code for surface burning characteristics.

E. Colors: To be selected from manufacturer's full range of available colors.

1. Allow for minimum of three colors for each system, unless otherwise indicated, without additional cost to The City.
2. Where colors are to match existing surfaces, it shall be the contractors responsiblity to obtain existing color samples, and send these to the paint supplier (or equipment supplier in the case of factory painted equipment). The engineer or architect will not review color samples that are intended to match existing surfaces-- this is the contractor's responsiblity.

2.03 PAINT SYSTEMS - INTERIOR

A. Walls and Ceilings indicated to be painted including gypsum board, concrete, concrete masonry, plaster, and uncoated steel

1. 3 Top Coats and one coat primer.
2. Semi-Gloss: MPI gloss level 5; use this sheen at walls and ceilings.
3. Primer(s): As recommended by manufacturer of top coats.

B. Mechanical Room Floor Coatings

1. Waterbase epoxy.
   a. Apply 4-coats minnimum with walnut shells for non-slip surface

2.04 ACCESSORY MATERIALS

A. Accessory Materials: Provide all primers, sealers, cleaning agents, cleaning cloths, sanding materials, and clean-up materials required to achieve the finishes specified whether specifically indicated or not; commercial quality.

B. Patching Material: Latex filler.

C. Fastener Head Cover Material: Latex filler.

PART 3 EXECUTION

3.01 EXAMINATION

A. Do not begin application of coatings until substrates have been properly prepared.

B. Verify that surfaces are ready to receive work as instructed by the product manufacturer.

C. Examine surfaces scheduled to be finished prior to commencement of work. Report any condition that may potentially affect proper application.

D. Test shop-applied primer for compatibility with subsequent cover materials.

E. Measure moisture content of surfaces using an electronic moisture meter. Do not apply finishes unless moisture content of surfaces are below the following maximums:

1. Gypsum Wallboard: 12 percent.
2. Plaster and Stucco: 12 percent.
3. Masonry, Concrete, and Concrete Unit Masonry: 12 percent.
4. Concrete Floors and Traffic Surfaces: 8 percent.

3.02 PREPARATION

A. Clean surfaces thoroughly and correct defects prior to coating application.

B. Prepare surfaces using the methods recommended by the manufacturer for achieving the best result for the substrate under the project conditions.

C. Remove or repair existing coatings that exhibit surface defects.

D. Remove or mask surface appurtenances, including electrical plates, hardware, light fixture trim, escutcheons, and fittings, prior to preparing surfaces or finishing.

E. Seal surfaces that might cause bleed through or staining of topcoat.

F. Remove mildew from impervious surfaces by scrubbing with solution of tetra-sodium phosphate and bleach. Rinse with clean water and allow surface to dry.

G. Concrete and Unit Masonry Surfaces to be Painted: Remove dirt, loose mortar, scale, salt or alkali powder, and other foreign matter. Remove oil and grease with a solution of tri-sodium phosphate; rinse well and allow to dry. Remove stains caused by weathering of corroding metals with a solution of sodium metasilicate after thoroughly wetting with water. Allow to dry.

H. Gypsum Board Surfaces to be Painted: Fill minor defects with filler compound. Spot prime defects after repair.

I. Plaster Surfaces to be Painted: Fill hairline cracks, small holes, and imperfections with latex patching plaster. Make smooth and flush with adjacent surfaces. Wash and neutralize high alkali surfaces.

J. Concrete Floors and Traffic Surfaces to be Painted: Remove contamination, acid etch, and rinse floors with clear water. Verify required acid-alkali balance is achieved. Allow to dry.

3.03 APPLICATION

A. Apply products in accordance with manufacturer's instructions.

B. Do not apply finishes to surfaces that are not dry. Allow applied coats to dry before next coat is applied.

C. Apply each coat to uniform appearance.

D. Dark Colors and Deep Clear Colors: Regardless of number of coats specified, apply as many coats as necessary for complete hide.

E. Vacuum clean surfaces of loose particles. Use tack cloth to remove dust and particles just prior to applying next coat.

F. Reinstall electrical cover plates, hardware, light fixture trim, escutcheons, and fittings removed prior to finishing.

3.04 CLEANING

A. Collect waste material that could constitute a fire hazard, place in closed metal containers, and remove daily from site.

3.05 PROTECTION

A. Protect finished coatings until completion of project.

B. Touch-up damaged coatings after Substantial Completion.

3.06 SCHEDULE - COLORS

A. Kellymore- Swiss Coffee

B. Or Approved Equal

END OF SECTION

SECTION 23 0001

GENERAL MECHANICAL REQUIREMENTS

PART 1 GENERAL

1.01 APPLICABILITY

A. These specifications apply are standard Salas O'Brien Engineering specifications for mechanical projects where the mechanical contractor is the prime contractor.

1.02 DESCRIPTION

A. In submitting a bid for this project, the contractor (and all subcontractors) represents that they are qualified to install the systems required for this project. The contractor shall provide a complete working installation with all systems fully operational. Documents do not undertake to show or list every item to be provided.

B. Prior to submitting a proposal, the bidder shall examine all general construction drawings and shall have visited the the construction site. He shall be familiar with the existing conditions under which he will have to operate and which will in any way affect the work under this contract. No subsequent allowance will be made in this connection in behaf of the contractor for any error or negligence on his part.

C. The intent of the drawings and specifications is that the work of the alteration, rehabilitation or reconstruction is to be in accordance with the title 24, California Code of Regulation. Should any existing conditions such as deterioration or noncomplying construction be discovered which is not covered in the contract documents wherein the finished work wil not comply with Title 24, California Code of Regulations, a change order, or a separate set of plans and specifications detailing and specifying the required work shall be submitted to and approved by the engineer before proceeding with the work.

1.03 REFERENCE STANDARDS

A. SMACNA - Sheet Metal and Air Conditioning Contractors' National Association.
   1. Guidelines for Seismic Restraints of Mechanical Systems, OSHPD approved anchorage No. R-0010.

1.04 QUALITY ASSURANCE

A. Requirements of Regulatory Agencies:
   1. In accordance with the requirements of DIVISION 1.
   2. Nothing in the drawings or specifications shall be construed to permit work not conforming to applicable laws, ordinances, rules or regulations.
   3. When drawings or specifications exceed requirements of applicable laws, ordinances, rules, regulations, the drawings and specifications shall take precedence.
   4. It is not the intent of drawings or specifications to repeat requirements of codes except where necessary for completeness or clarity.
   5. Work herein shall comply with all applicable requirements of Occupational Safety and Health Act of 1970 and pertinent amendments as they apply to this project, both in reference to Contractor's operations in performing his work and also in construction result to be accomplished. Where an omission or a conflict appears between OSHA requirements and the drawings and specifications, OSHA requirements shall take precedence.

1.05 SUBMITTALS

A. General
   1. Submittals are required on all new equipment and materials shown in schedules on the drawings. This requirement applies even if there are no substitutions, or if the equipment has been pre-selected, or pre-ordered by the owner. For other equipment or materials specified but not in the schedules, submittals are only required when a substitution is proposed, and the specification says "or approved equal". Shop drawings are required when called for on the plans.
   2. All submittals for the project are to be included in one submittal package.

B. Binders:
   1. Insert all literature in four standard three (3) ring binders for 8-1/2 x 11 inch pages with individual tabs. Do not staple literature on different products together.
   2. Provide an index with each binder.
   3. Submittal literature, drawings and wiring diagrams shall be specifically applicable to this project and shall not contain extraneous material or optional choices. The literature shall be clearly marked to indicate the proposed item.

C. The Engineer's review is not intended to verify dimensions or quantities, nor to coordinate items shown on these drawings. He will review them for general conformance with design concept of the project and general compliance with the information given in the contract requirements of the plans and specifications. Contractor is responsible for dimensions, which shall be confirmed and correlated at the jobsite, for fabrication processes and techniques of construction, for coordination of his work with that of all other trades, and the satisfactory performance of his work.

1.06 OPERATION AND MAINTENANCE MANUALS

A. Furnish an operation and maintenance manual covering the stipulated mechanical systems and equipment. Four copies of the manual, bound in the hard-back binders or an approved equivalent, shall be provided to the engineer.

B. Provide a table of contents. Insert tab sheets to identify discrete subjects. Instruction sheets shall be legible and easily understood, with large sheets of drawings folded in. The manual shall be complete in all respects for all equipment installed. The O&M manuals shall also include all project close out documents. Include as minimum the following (where applicable):
   1. Copies of signed-off city permits.
   2. Copies of any test reports required for the project. This includes air and water balance reports, fan shutdown test reports, circuit breaker test reports, special inspection reports, and any tests required by the city.
   3. Adjustment, maintenance, and overhaul instructions.
   4. Lubrication schedule including type, grade, temperature range, and frequency.
   5. Test procedures.
   6. Parts lists, with manufacturer's name and catalog numbers.
   7. Preventative maintenance schedule.
   8. Service organization with name, address, and telephone number.

1.07 DELIVERY AND STORAGE

A. Properly store, adequately protect, and carefully handle equipment and materials to prevent damage before and during installation as recommended by the manufacturer and as approved by the owner. Materials may only be stored onsite in locations approved by the owner or building specialist. Floor and roofs where materials are to be stored must be protected from damage. All materials stored on site shall be identified with the contractor's name and project work order number. Items determined to be damaged or defective shall be replaced at no cost to the owner.

1.08 DRAWINGS AND COORDINATION WITH OTHER WORK

A. Drawings:
   1. Where discrepancies occur between the plans and specifications, contractor shall notify owner of any discrepancies in writing. Any adjustment of the contract documents without a determination by the owner shall be at the contractors own risk and expense. The most stringent requirements shall apply as determined by the owner.
   2. For purposes of clarity and legibility, drawings are diagrammatic to the extent that many offsets, bends, unions, special fittings, exact locations of items are not indicated, unless specifically dimensioned or called for.
   3. Exact routing of piping, ductwork, etc., shall be governed by structural conditions and obstructions. Contractor shall make use of data in Contract Documents.

4. Contractor shall verify all dimensions prior to ordering or fabricating ducts, piping, dampers, equipment, etc.
5. Verify layout and coordinate with other trades to ensure that all required clearances are met. Notify Engineer of any conflicts prior to fabrication or installation.

PART 2 - PRODUCTS

2.01 EQUIPMENT

A. For general equipment requirements, including temporary equipment, see section 230002.

2.02 MATERIALS

A. Equipment and materials specified herein or on the contract drawings shall be as specified, or approved equal.

B. Equipment specified by manufacturer's number shall include all accessories, controls, etc. listed in catalog as standard with equipment. Furnish optional or additional accessories as specified.

C. Where no specific make of material or equipment is mentioned, any first class product of reputable manufacturer may be used, provided it conforms to the requirements of the system.

D. Equipment or material damaged during transportation, installation, or operation is considered as totally damaged and shall be replaced with new. Variance from this is permitted only with prior written approval.

PART 3 - EXECUTION

3.01 GENERAL

A. All work shall be done at such a time and in such a manner as prescribed by the owner.

B. Contractor shall protect the building and it's occupants from any damage due to dust and moisture. This protection shall be included in the bid.

3.02 TEMPORARY COOLING/HEATING

A. Where the plans call for temporary cooling/heating, the contractor will be expected to take certain steps that may not be shown on the plans to make the temporary cooling work properly and adequately cool the building. The contractor will be required to take the steps that would normally be required, or could reasonably be anticipated. A partial list of examples is shown below. Contractors shall include this work in their bids for no added cost to the owner.
   1. Install temporary cooling/heating per code. All equipment shall be anchored. Temporary piping shall be insulated to the same requirements as permanently installed going to prevent condensation.
   2. Furnish and install all incidentals to make temporary cooling/heating operational. Furnish transitions and plenums for connections to air handlers and package units. Provide extension cords for pedestal fans, and startes and disconnects for larger equipment. Provide temporary condensate drain lines and/or condensate pumps for air conditioning equipment.
   3. Maintain temporary equipment in good operation condition for the duration of the project. For the equipment furnished by the contractor, this includes all required maintenance and repairs. For equipment furnished by the city, monitor the operation of the equipment and change filters as the become dirty. If equipment requires service, provide quotation to the city.
   4. Temporarily rebalance the affected air and water distribution systems to obtain the required air and water flow rates necessary. For any valves or dampers that must be adjusted, the initial position shall be marked at the device, and the device shall be returned to the same position whe the temporary cooling is removed.
   5. Perform testing and balance work to assure that temporary equipment is operating at rated capacity. Measure air and water flows, temperatures, and pressures. Adjust fan drives, chilled water valves, and water flows as required.
   6. Schedule shutdowns for tie-ins and removal of temporary piping, ductwork, or electrical. Shutdowns affecting service require city approval prior to the work comencing.

7. Provide and install dampers, valves, blank-off plates, pipe caps, or other devices as required to achieve the required air or water flows. Where connectiong to ductwork, provide devices to prevent back-flow, (cap duct, or install damper). Where connecting to piping systems, install valves or pipe caps as needed to isolate connections.
8. Route the temporary piping and ductwork to miss the new work to be installed in the project. In some cases, this may require relocating the piping or ductwork several times during the project.
9. When temporary systems are no longer required, remove completely. Patch and paint all holes to match adjacent surfaces. For temporary equipment furnished by the city, move the equipment to a location onsite as designated by the city (unless drawings call for the unit to be moved to an off-site location).

3.03 EQUIPMENT INSTALLATION

A. Manufacturer's Directions: Follow in all cases where manufacturers of articles furnish directions covering points not specified or shown.

B. Equipment which is required to be field assembled shall be the responsibility of the contractor to properly assemble per the manufacturer's instructions. The contractor may use either their own properly qualified personnel, or hire a factory representative. When obtaining pricing for equipment included in the contractor's bid, it shall be the contractor's responsibility to find out from the vendor the extent of field assembly required, to maintain electrical and service clearances, and include labor for this field assembly.

C. Equipment shall be accurately set and leveled with supports neatly placed and properly fastened. Properly fasten equipment in place with bolts or clips as shown on drawings to prevent movement in earthquake. No allowance of any kind will be made for negligence on part of Contractor to foresee means of bringing in or installing equipment into position in or on the building.

3.04 PIPING & DUCTWORK

A. Work into a complete, integrated arrangement with like elements to make work and be neat in appearance when finished.

B. Run concealed, except as shown or noted otherwise. Where exposed, run parallel with walls or structural elements, vertical runs shall be plumb, and horizontal runs level and parallel with structure or uniformly pitched as appropriate.

C. Install with adequate passageways free from obstructions with manufacturers recommended maintenance access as shown or as required. Notify Engineer before installation whenever recommended maintenance access cannot be achieved. Coordinate with other trades to maintain required Code clearances.

D. Clearance: Maintain code required electrical clearances and manufacture's recommended service clearance for all new mechanical equipment. Do not obstruct spaces required by Code in front of electrical equipment, access doors, etc.

E. Flash and counterflash all pipes, ducts and conduits through roof.

F. Penetrations: Make penetrations through any damp-proofed/water-proof surfaces by appropriate means to maintain integrity of system penetrated. Includes penetrations caused by hangers suspended off such surfaces.

G. Expansion and Contraction: Make adequate provisions, whether those provisions are shown on Drawings or not.

H. Cleaning and Closing: Inspect all piping, ductwork, and equipment before placing; clean interior before closing. Close all piping and ductwork at end of each day's work.

3.05 CUTTING AND REPAIRING:

A. Do all cutting and repairing, including structural reinforcing, necessary for work under this division.

B. Repair damage done by cutting equal to original condition.

C. Assume responsibility for all damage to any part of premises or work of other DIVISIONS, caused by leaks or breaks in piping or equipment furnished and/or installed under this DIVISION during construction and guarantee period.

D. TESTING AND ADJUSTING
   1. Furnish all labor and test equipment required under this DIVISION.
   2. Clean and purge equipment and piping before each test.
   3. Test various Mechanical systems in portions as work progresses. Any system or portion previously tested shall become part of any repeated test when it becomes part of distribution or collection system.
   4. Repair leaks by remaking with new material. Makeshift leak stopping methods are not acceptable.
   5. Should any piece of equipment or material fail in any of the tests, immediately remove, repair with new; retest system.
   6. Maintain test pressures for periods stated, or as directed without loss in pressure, except that due to change in temperature or atmospheric pressure during test.
   7. Perform all tests in accordance with requirements and under supervision of authorities having jurisdiction.
   8. Prior to air balance testing, run blowers for a minimum of 48 hours, cycling on/off periodically to loosen dirt etc. in the system. During test, place cloth over all diffusers to catch debris. Subsequent to test, and prior to air balancing, clean plenums (see 3.6).

3.06 CLEANING AND PAINTING

A. When painting is called for, care shall be taken to protect equipment nameplates, motors and shafts, switchgear, etc.

B. The Contractor shall at all times keep the premises free from accumulation of waste material and debris caused by his employees. At the completion of the project, remove refuse from within and around the building. All tools, scaffolding, and surplus materials shall also be removed, leaving the area of work and the site work broom clean.

C. SIGNS, LABELS AND IDENTIFICATION OF EQUIPMENT, PIPING, AND VALVES
   1. Properly identify each piece of equipment and its controls using engraved laminated plastic descriptive nameplates, fastened to equipment and controls using round head brass machine screws, pop rivets, contact cement, or a chain. Cardholders in any form are not acceptable. In addition, neatly paint (using stencils) the Mark identification on each piece of equipment, including, but not limited to:
      a. Packaged Rooftop Units
      b. Electrical Panels & Components
      c. Control Panels & Components
      d. Fan System
      e. Chillers
   2. Place warning signs on machines driven by electric motors which are controlled by fully automatic starters, per Article 3281, General Industry Safety Orders. Also place warning signs where the work the contractor installs can create a hazard to persons not familiar with the system. An example would be access doors under pressure that open out.

END OF SECTION

SECTION 23 0002
EQUIPMENT

PART 1 GENERAL

1.01 TEMPORARY EQUIPMENT

A. Unless noted otherwise, temporary equipment shall be furnished by the contractor for the duration of the project, and then removed by the contractor at the completion of the project.

1.02 LISTING

A. All equipment shall be listed by a nationally recognized testing agency, such as U.L. or E.T.L.

PART 2 PRODUCTS

2.01 MANUFACTURERS

A. Greenheck: www.Greenheck.com

B. Huntair: www.Huntair.com

C. Or Approved Equal

2.02 AIR HANDLER FANS

A. All air handler fans shall be equiped with enclosed belt guards. Centrifugal and plenum fans will be equiped with inlet screens if they do not have a back draft damper immediately infront of the fan inlet. All plenum fans will have fully enclosed protective cages.

2.03 CONDENSATE PANS AND DRAINS

A. Condensate pans for built-up air handlers shall be constructed of 16ga, Type 304 stainless steel. Pans shall be 3" deep, 24" wide, and extend the full length of the cooling coil and any uninsulated connections or headers of the cooling coil. The pan shall not be notched or cut in any way to facilitate connection to the chilled water piping and slope towards the drain. Top edges shall be hemmed and corners welded and ground smooth.

B. Condensate drains shall be copper, 2" minimum size. Provide U-trap drain outside of the air handler. Height difference of U-trap inlet and outlet shall be the maximum fan static pressure, plus one (1") inch. Provide risers and plugs on each leg of the U-trap to facilitate clean out.

PART 3 EXECUTION

3.01 EXAMINATION

A. The contractor shall verify all equipment to insure that it is consistent with the project requirements. After equipment is received, and before it is installed, verify that the equipment received is what was ordered, and that it will meet the project requirements. Verify voltages, accessories, capacities, and physical dimensions. Also verify the method of setting the equipment in place. The contractor shall be responsible for installation and removal costs if incompatible equipment is installed without prior verification.

3.02 INSTALLATION

A. Install all equipment in accordance with manufacturer's instructions.

B. Serviceability of equipment: All equipment shall be installed so that it is readily and easily serviceable. Manufacturer's recommended clearances shall be maintained. All filter compartments shall have hinged access doors and a Magnahelic for reading filter bank pressure drop. Fans shall be located (or access doors provided) so shafts can be pulled. Belt guards shall be easily removable. Lifting eyes shall be installed in ceilings above motors over 100 lbs. Grease (Zerk) fittings shall be easily accessible -- provide remote mounting as required. All air handler compartment doors shall be labeled.

C. CONDENSATE DRAINS: Provide condensate drains on cooling equipment. Drain lines shall be the size of the connection on the unit or larger if indicated on the plans. Traps shall be 4" minimum. Provide cleanouts at changes in direction. Slope drain lines a minimum of 1/4" per foot. All drain lines shall be copper or steel (no PVC).

END OF SECTION

SECTION 23 0513
COMMON MOTOR REQUIREMENTS

PART 1 GENERAL

1.01 SECTION INCLUDES

A. Single phase electric motors.

B. Three phase electric motors.

PART 2 PRODUCTS

2.01 MANUFACTURERS

A. Lincoln Motors

B. Reliance Electric/Rockwell Automation

C. General Electric

D. Gould

2.02 SINGLE PHASE MOTORS

A. All single phase motors shall have automatic overload protection.

2.03 THREE PHASE MOTORS

A. Indoor motors, including motors inside outdoor equipment, shall be open, drip-proof construction, unless specified otherwise. All outdoor motors shall be totally enclosed, fan cooled. Outdoor TEFC motors mounted vertically (such as inline pump motors), shall be provided with a drip canopy to keep water off the motor shaft bearing.

B. Motors shall have a service factor of 1.5.

C. Motor's BHP shall be selected at no more than 95% of the rated HP.

D. Power Output, Locked Rotor Torque, Breakdown or Pull Out Torque: NEMA Design B characteristics.

E. Design, Construction, Testing, and Performance: Conform to NEMA MG 1 for Design B motors.

F. Motor Winding Insulation System: NEMA Class B or better. Motors used in conjunction with a VFD shall be NEMA Class F "inverter duty".

G. Bearings: Grease lubricated anti-friction ball bearings with housings equipped with plugged provision for relubrication, rated for minimum ABMA STD 9, L-10 life of 200,000 hours. Calculate bearing load with NEMA minimum V-belt pulley with belt center line at end of NEMA standard shaft extension. Stamp bearing sizes on nameplate.

H. Unless otherwise noted, all motors shall be "Premium Efficiency" at full load and rated voltage when tested in accordance with IEEE 112.

I. Inverter duty motors shall have shaft grounding.

PART 3 EXECUTION

3.01 INSTALLATION

A. Install in accordance with manufacturer's instructions.

B. Install securely on firm foundation. Mount ball bearing motors with shaft in any position.

C. Check line voltage and phase and ensure agreement with nameplate.

D. Whenever a motor is put into service for the first time, the amp draw shall be immediately measured. If amp draw exceeds the nameplate amp rating, the motor shall be shut off immediately and not operated until adjustments have been made to bring the amps below the maximum rating.

3.02 CHANGING MOTOR DRIVE RATIOS

A. If the balance contractor determines that a belt driven blower is not turning at the proper RPM, the contractor shall change belts and sheaves at no additional cost.

B. Whenever motor drive ratios must be changed on belt driven equipment, the following procedure shall be used:

1. The contractor shall pre-test the fan to determine fan RPM, inlet and outlet static pressure, motor amps, and sheave sizes.
2. Using fan laws, or fan curves when available, the contractor shall calculate the required new blower RPM and select the optimum new sheave sizes. This information shall be submitted to the Engineer for review.
3. After changing drives, the fan shall be retested as above, and the same information from the re-test shall be resubmitted to the engineer for review.

END OF SECTION

SECTION 23 0519

METERS AND GAGES FOR HVAC AND PLUMBING PIPING

PART 1 GENERAL

1.01 SECTION INCLUDES

A. Flow meters.

B. Pressure gages and pressure gage taps.

C. Thermometers and thermometer wells.

D. Static pressure gages.

E. Filter gages.

1.02 FIELD CONDITIONS

A. Do not install instrumentation when areas are under construction, except for required rough-in, taps, supports and test plugs.

PART 2 PRODUCTS

2.01 LIQUID FLOW METERS

A. Manufacturers:
   1. Dwyer Instruments, Inc: www.dwyer-inst.com.
   2. McCrometer: www.mccrometer.com.
   3. Onicon Inc.: www.onicon.com
   4. Ashcroft: www.ashcroft.com.
   5. Hersey Measurement Company.
   6. Or Approved Equal.

B. Annular element flow stations with meter set.
   1. Measuring Station: Type 316 stainless steel pitot type flow element inserted through welded threaded couplet, with safety shut-off valves and quick coupling connections, and permanent metal tag indicating design flow rate, reading for design flow rate, metered fluid, line size, station or location number.
      a. Pressure rating: 275 psi (1896 kPa).
      b. Accuracy: Plus 0.55 percent to minus 2.30 percent.

C. In-Line Electromagnetic Flow Meter
   1. Liner: Polypropylene
   2. Accuracy: +/- 0.4%

2.02 PRESSURE GAGES

A. Manufacturers:
   1. Dwyer Instruments, Inc: www.dwyer-inst.com.
   2. Moeller Instrument Co., Inc: www.moellerinstrument.com.
   3. Ashcroft: www.ashcroft.com.
   4. Marsh Instruments: www.marshbellofram.com.
   5. Weksler: www.weksler.com.
   6. Or Approved Equal.

B. Pressure Gages: ASME B40.100, UL 393 drawn steel case, phosphor bronze bourdon tube, rotary brass movement, brass socket, with front recalibration adjustment, black scale on white background.
   1. Case: Steel with brass bourdon tube.
   2. Size: 3-1/2 inch (90 mm) minimum diameter.
   3. Mid-Scale Accuracy: One percent.
   4. Scale: Psi.

2.03 PRESSURE GAGE TAPPINGS

A. Gage Cock (at all pressure gages): Tee or Lever handle, 90 degree valve. Needle valves shall not be accepted. Pressure rating to be compatible with the system pressure rating.

B. Pulsation Damper: Pressure snubber shall be brass with 1/4" connections and built-in filter.

2.04 DIAL THERMOMETERS

A. Manufacturers:
   1. Weiss Instruments: Model 3VBM or approved equal.

B. Only dial type thermometers shall be accepted. Bulb type thermometers shall not be accepted.

C. Thermometer: ASTM E1, stainless steel case, adjustable angle with front recalibration, bimetallic helix actuated with silicone fluid damping, white with black markings and black pointer hermetically sealed lens, stainless steel stem.
   1. Size: 3 inch (75 mm) diameter dial or larger.
   2. Lens: Clear glass.
   3. Accuracy: 1 percent.
   4. Calibration: Degrees F.

2.05 TEST PLUGS

A. Test Plug: 1/4 inch (6 mm) or 1/2 inch (13 mm) brass fitting and cap for receiving 1/8 inch (3 mm) outside diameter pressure or temperature probe with neoprene core for temperatures up to 200 degrees F (93 degrees C).

2.06 STATIC PRESSURE GAGES (MAGNEHELICS)

A. Manufacturers:
   1. Dwyer Instruments, Inc; Model 2001; Magnehelic, or approved equal.

B. 3-1/2 inch (90 mm) diameter dial in metal case, diaphragm actuated, black figures on white background, front recalibration adjustment, 2 percent of full scale accuracy.

C. Accessories: Static pressure tips with compression fittings for bulkhead mounting, 1/4 inch (6 mm) diameter tubing.

PART 3 EXECUTION

3.01 INSTALLATION

A. Install in accordance with manufacturer's instructions.

B. Install magnahelics at all fan systems with filtration efficiencies above 35 percent, and all air handlers over 10,000 CFM. Install to read pressure differential across the filter bank. Provide gauge cocks on both sides of gage.

C. Provide one pressure gage per pump, installing taps before strainers and on suction and discharge of pump. Pipe to gage.

D. Install pressure gages with pulsation dampers. Provide gage cock to isolate each gage. Provide siphon on gages in steam systems. Extend nipples and siphons to allow clearance from insulation.

E. Install thermometers in piping systems in sockets in short couplings. Enlarge pipes smaller than 2-1/2 inch (60 mm) for installation of thermometer sockets. Ensure sockets allow clearance from insulation.

F. Provide instruments with scale ranges selected according to service with largest appropriate scale.

G. Install gages and thermometers in locations where they are easily read from normal operating level. Install vertical to 45 degrees off vertical.

H. Adjust gages and thermometers to final angle, clean windows and lenses, and calibrate to zero.

END OF SECTION

SECTION 23 0548
VIBRATION ISOLATION

PART 1 GENERAL

1.01 SECTION INCLUDES

A. Inertia bases.

B. Vibration isolators.

C. Seismic restraints.

PART 2 PRODUCTS

2.01 MANUFACTURERS

A. Mason Industries: www.mason-ind.com., or approved equal.

2.02 STRUCTURAL BASES

A. Structural Bases:
   1. Construction: Welded structural steel with gusseted brackets, to support equipment and motor, with motor slide rails.
   2. Design: Sufficiently rigid to prevent misalignment or undue stress on machine, and to transmit design loads to isolators and snubbers.

2.03 VIBRATION ISOLATORS

A. Restrained Closed Spring Isolators:
   1. The isolator manufacturer shall select the optimum spring / snubber types for the application. All isolator / snubber selections shall include calculations stamped and signed by a civil engineer. These calculations shall be based on the appropriate seismic coefficients, and shall include overturn calculations. Anchor bolts shall be specified as well.
   2. Spring deflection shall be 2" on all equipment over 2,000 lbs.
   3. Type: Closed spring mount with top and bottom housing separated with neoprene rubber stabilizers.
   4. Springs: Minimum horizontal stiffness equal to 75 percent vertical stiffness, with working deflection between 0.3 and 0.6 of maximum deflection. Color code springs for load carrying capacity.
   5. Housings: Incorporate neoprene isolation pad meeting requirements for neoprene pad isolators, and neoprene side stabilizers with minimum 0.25 inch (7 mm) clearance and limit stops.
   6. For Exterior and Humid Areas: Hot dipped galvanized housings and neoprene coated springs.

B. Spring Hangers:
   1. Springs: Minimum horizontal stiffness equal to 75 percent vertical stiffness, with working deflection between 0.3 and 0.6 of maximum deflection. Color code springs for load carrying capacity.
   2. Housings: Incorporate neoprene isolation pad meeting requirements for neoprene pad isolators.
   3. Misalignment: Capable of 20 degree hanger rod misalignment.
   4. For Exterior and Humid Areas: Hot dipped galvanized housings and neoprene coated springs.

C. Neoprene Pad Isolators:
   1. Rubber or neoprene waffle pads:
      a. Hardness: 30 durometer.
      b. Thickness: Minimum 1/2 inch (13 mm).
      c. Maximum Loading: 50 psi (345 kPa).
      d. Rib Height: Maximum 0.7 times width.
   2. Configuration: Single layer.

D. Seismic Snubbers:
   1. Type: Non-directional and double acting unit consisting of interlocking steel members restrained by neoprene elements.
   2. Elements: Replaceable neoprene, minimum of 1/2" inch thick with minimum 0.75 inch air gap.
   3. For Exterior Use: Hot dipped galvanized housings and neoprene coated springs.

PART 3 EXECUTION

3.01 INSTALLATION

A. Install in accordance with manufacturer's instructions.

B. Bases:
   1. Set steel bases for one inch (25 mm) clearance between housekeeping pad and base.
   2. Adjust equipment level.

C. On closed spring isolators, adjust so side stabilizers are clear under normal operating conditions.

D. Prior to making piping connections to equipment with operating weights substantially different from installed weights, block up equipment with temporary shims to final height. When full load is applied, adjust isolators to load to allow shim removal.

E. Provide seismic snubbers for all equipment, piping, and ductwork mounted on isolators. Each inertia base shall have minimum of four seismic snubbers located close to isolators. Snub equipment designated for post-disaster use to 0.05 inch (1.5 mm) maximum clearance. Other snubbers shall have clearance between 0.15 inch (4 mm) and 0.25 inch (7 mm).

END OF SECTION

SECTION 23 0553

IDENTIFICATION FOR PIPING AND EQUIPMENT

PART 1 GENERAL

1.01 SECTION INCLUDES

A. Nameplates.

B. Tags.

C. Pipe Markers.

PART 2 PRODUCTS

2.01 MANUFACTURERS:

A. Seton Identification Products: www.seton.com.

B. Champion-America, Inc..

C. Brady USA, Inc.

2.02 NAMEPLATES

A. **Description:** Laminated three-layer plastic with engraved letters.
   1. Letter Color: White
   2. Letter Height: 1" for major equipment (air handlers, chillers, etc.), 1/4" for terminal units, VAV boxes, pumps, VFD's, and other secondary equipment.
   3. Background Color: Black

2.03 PIPE MARKERS

A. Plastic Tape Pipe Markers: Flexible, vinyl film tape with pressure sensitive adhesive backing and printed markings.

2.04 CEILING LABELS

A. Application: Install wherever equipment is located above a T-bar ceiling. Install directly below the unit. For VAV boxes, locate on the control side of the unit. For fan systems with filters, locate on the filter access side of the unit. Label per the equipment schedule. Labels shall be engraved with self-adhesive backing. Overall height of the label shall be 1" to fit the one inch wide T-bar grid.

PART 3 EXECUTION

3.01 PREPARATION

A. Degrease and clean surfaces to receive adhesive for identification materials.

3.02 INSTALLATION

A. Properly identify each piece of equipment and its controls using engraved laminated plastic descriptive nameplates, fastened to the equipment and controls using round head brass mashine screws, pop rivets, contact cement, or chain to the equipment. Cardholders in any form are not acceptable. In addition, neatly paint (using stencils) the Mark identification on each piece of equipment, including by not limited to:
   1. Packaged Rooftop Units
   2. Electrical Panels & Components
   3. Control Panels & Components
   4. Fan Systems
   5. Chillers

B. Place warning signs on machines driven by electric motors which are controlled by fully automatic starters, per Article 3281, General Industry Safety Orders. Also place warning signs where the work the contractor installs can create a hazard to persons not familiar with the system. An example would be access doors under pressure that open outward.

C. Install plastic nameplates with corrosive-resistant mechanical fasteners.

D. Install plastic pipe markers in accordance with manufacturer's instructions.

E. Install plastic tape pipe markers complete around pipe in accordance with manufacturer's instructions.

F. Install underground plastic pipe markers 6 to 8 inches (150 to 200 mm) below finished grade, directly above buried pipe.

G. Identify all new equipment with plastic nameplates. Identify per equipment schedules.

H. Identify control panels and major control components outside panels with plastic nameplates.

I. Identify piping, concealed or exposed, with plastic tape markers. Identify service and flow direction. Install in clear view and align with axis of piping. Locate identification not to exceed 20 feet on straight runs including risers and drops, adjacted to each valve and Tee, at each side of penetration of structure or enclosure, and at each obstruction.

J. Locate ceiling tacks to locate valves or dampers above lay-in panel ceilings. Locate in corner of panel closest to equipment.

END OF SECTION

SECTION 23 0593

TESTING, ADJUSTING, AND BALANCING

PART 1 GENERAL

1.01 SECTION INCLUDES

A. Testing, adjustment, and balancing of air systems.

B. Testing, adjusting, and balancing of hydronic systems.

C. Temporary Balance

1.02 SCOPE OF WORK

A. All new mechanical systems shall be completely balanced, unless the drawings specifically state not to do so. Where new air handlers are installed with existing air distribution systems, the entire air distribution system for that air handler shall be balanced along with the air handler. All temporary cooling systems shall also be balanced, unless the drawings state not to do so. Where flow quantities or equipment speeds are not given on the drawings, contact the engineer for this information.

1.03 REFERENCE STANDARDS

A. AABC MN-1 - National Standard for Testing and Balancing Heating, Ventilating, and Air Conditioning Systems; Associated Air Balance Council; 2002.

B. ASHRAE Std 111 - Practices for Measurement, Testing, Adjusting and Balancing of Building Heating, Ventilation, Air-Conditioning, and Refrigeration Systems; American Society of Heating, Refrigerating and Air-Conditioning Engineers, Inc.

C. NEBB (TAB) - Procedural Standards for Testing Adjusting Balancing of Environmental Systems; National Environmental Balancing Bureau; 1998, Sixth Edition.

1.04 SUBMITTALS

A. Submit name of adjusting and balancing agency for approval within 30 days after award of Contract.

B. Field Reports: Prior to start of construction, indicate deficiencies in systems that would prevent proper testing, adjusting, and balancing of systems and equipment to achieve specified performance.

1. Submit draft copies of report for review prior to final acceptance of Project. Provide final copies for Architect and for inclusion in operating and maintenance manuals.
2. Provide reports in soft cover, letter size, 3-ring binder manuals, complete with index page and indexing tabs, with cover identification at front and side. Include set of reduced drawings with air outlets and equipment identified to correspond with data sheets and indicating thermostat locations.
3. Include the following on the title page of each report:
   a. Name of Testing, Adjusting, and Balancing Agency.
   b. Address of Testing, Adjusting, and Balancing Agency.
   c. Telephone number of Testing, Adjusting, and Balancing Agency.
   d. Project name.
   e. Project location.
   f. Project Architect.
   g. Project Contractor.
   h. Report date.

1.05 QUALITY ASSURANCE

A. Perform total system balance in accordance with AABC MN-1, ASHRAE Std 111, or NEBB Procedural Standards for Testing, Balancing and Adjusting of Environmental Systems.

B. TAB Agency Qualifications:

1. Company specializing in the testing, adjusting, and balancing of systems specified in this Section with minimum three years documented experience certified by AABC .

2. Third party testing company, unless previously approved.

1.06 PRE-BALANCING MEETING

A. Convene a meeting one week prior to commencing work of this Section.

PART 2 PRODUCTS - NOT USED

PART 3 EXECUTION

3.01 TESTING, ADJUSTING, AND BALANCING AGENCIES

A. Testing and balance contractor shall provide documentation of TAB certification with the air balance report at the close of the project.

3.02 EXAMINATION

A. Verify that systems are complete and operable before commencing work. Ensure the following conditions:
   1. Systems are started and operating in a safe and normal condition.
   2. Temperature control systems are installed, complete, and operable.
   3. Proper thermal overload protection is in place for electrical equipment.
   4. Final filters are clean and in place. If required, install temporary media in addition to final filters.
   5. Duct systems are clean of debris and system leakage is minimized.
   6. Fans and pumps are rotating correctly.
   7. Fire and volume control dampers are in place and open.
   8. Access doors are closed and duct end caps are in place.
   9. Air outlets are installed and connected.
   10. Hydronic systems have been flushed, filled, and vented by the mechanical contractor.

B. Beginning of work means acceptance of existing conditions.

3.03 PREPARATION

A. Provide instruments required for testing, adjusting, and balancing operations. Make instruments available to Architect to facilitate spot checks during testing.

B. Provide additional balancing devices as required.

3.04 INSTALLATION TOLERANCES

A. Air Handling Systems: Adjust to within plus or minus 5 percent of design for supply systems and plus or minus 10 percent of design for return and exhaust systems.

B. Air Outlets and Inlets: Adjust total to within plus 10 percent and minus 5 percent of design to space. Adjust outlets and inlets in space to within plus or minus 10 percent of design.

C. Hydronic Systems: Adjust to within plus or minus 10 percent of design.

3.05 ADJUSTING

A. Ensure recorded data represents actual measured or observed conditions.

B. Permanently mark settings of valves, dampers, and other adjustment devices, allowing settings to be restored. Set and lock memory stops.

C. After adjustment, take measurements to verify balance has not been disrupted or that such disruption has been rectified.

D. Leave systems in proper working order, replacing belt guards, closing access doors, closing doors to electrical switch boxes, and restoring thermostats to specified settings.

3.06 AIR SYSTEM PROCEDURE

A. Adjust air handling and distribution systems to provide required or design supply, return, and exhaust air quantities.

B. Make air quantity measurements in ducts by Pitot tube, traverse of entire cross sectional area of duct.

C. Measure air quantities at air inlets and outlets.

D. Adjust distribution system to obtain uniform space temperatures free from objectionable drafts and noise.

E. Use volume control devices to regulate air quantities only to the extent that adjustments do not create objectionable air motion or sound levels. Effect volume control by internal duct devices such as dampers and splitters.

F. Vary total system air quantities by adjusting fan speeds. Provide drive changes if required. Vary branch air quantities by damper regulation.

G. Measure CFMs and static air pressure conditions on air supply units, including filter and coil pressure drops, and total pressure across the fan. Measure in both 100% outside air (economizer) and recirculation modes.

H. Adjust outside air dampers, return air, and exhaust dampers for design conditions.

I. Measure temperature conditions across outside air, return air, and exhaust dampers to check leakage.

J. Measure building static pressure and adjust supply, return, and exhaust air systems to provide required relationship between each to maintain approximately 0.03 inches positive static pressure near the building entries.

3.07 HYDRONIC SYSTEM PROCEDURE

A. Adjust water systems to provide required design quantities.

B. Effect system balance with automatic control valves fully open to heat transfer elements.

C. Effect adjustment of water distribution systems by means of balancing cocks, valves, and fittings. Do not use service or shut-off valves for balancing unless indexed for balance point.

D. Where available pump capacity is less than total flow requirements or individual system parts, full flow in one part may be simulated by temporary restriction of flow to other parts.

3.08 TEMPORARY BALANCE

A. Temporary balancing work need not be performed by a certified balance contractor.

B. A temporary balance shall be performed when temporary cooling measures are used to facilitate equipment shutdowns. Prior to switching to temporary cooling, the contractor shall monitor the building for a minium of one day to locate existing hot spots. These shall be documented to Pacific Bell and the engineer if found. Once on temporary cooling, adjust balancing dampers and valves as needed to distribute the temporary cooling to avoid hot spots. Mark the position of all damper and valve handles prior to adjusting. Once temporary cooling is no longer needed, restore all balancing devices to their original positions.

3.09 MINIMUM DATA TO BE REPORTED

A. Report:
   1. Summary Comments:
      a. Design versus final performance
      b. Summary of outdoor and exhaust flows to indicate amount of building pressurization
      c. Nomenclature used throughout report
      d. Test conditions

B. Electric Motors:
   1. Manufacturer
   2. Model/Frame
   3. HP/BHP
   4. Phase, voltage, amperage; nameplate, actual, no load
   5. RPM
   6. Service factor
   7. Starter size, rating, heater elements
   8. Sheave Make/Size/Bore

C. V-Belt Drives:

1. Identification/location
2. Required driven RPM
3. Driven sheave, diameter and RPM
4. Belt, size and quantity
5. Motor sheave diameter and RPM
6. Center to center distance, maximum, minimum, and actual

D. Cooling Coils:
1. Identification/number
2. Location
3. Service
4. Manufacturer
5. Air flow, design and actual
6. Entering air DB temperature, design and actual
7. Entering air WB temperature, design and actual
8. Leaving air DB temperature, design and actual
9. Leaving air WB temperature, design and actual
10. Water flow, design and actual
11. Water pressure drop, design and actual
12. Entering water temperature, design and actual
13. Leaving water temperature, design and actual
14. Air pressure drop, design and actual

E. Heating Coils:
1. Identification/number
2. Location
3. Service
4. Manufacturer
5. Air flow, design and actual
6. Water flow, design and actual
7. Water pressure drop, design and actual
8. Entering water temperature, design and actual
9. Leaving water temperature, design and actual
10. Entering air temperature, design and actual
11. Leaving air temperature, design and actual
12. Air pressure drop, design and actual

F. Return Air/Outside Air:
1. Identification/location
2. Design air flow
3. Actual air flow
4. Design return air flow
5. Actual return air flow
6. Design outside air flow
7. Actual outside air flow
8. Return air temperature
9. Outside air temperature
10. Required mixed air temperature
11. Actual mixed air temperature
12. Design outside/return air ratio
13. Actual outside/return air ratio

G. Exhaust Fans:
1. Location
2. Manufacturer
3. Model number
4. Serial number

5. Air flow, specified and actual
6. Total static pressure (total external), specified and actual
7. Inlet pressure
8. Discharge pressure
9. Sheave Make/Size/Bore
10. Number of Belts/Make/Size
11. Fan RPM

END OF SECTION

SECTION 23 0713
DUCT INSULATION

PART 1 GENERAL

1.01 SECTION INCLUDES

A. Duct insulation.

B. Duct Liner.

1.02 REFERENCE STANDARDS

A. Uniform Mechanical Code

B. California Energy Code (Title 24)

1.03 SUBMITTALS

A. See Section 01 3000 - Administrative Requirements, for submittal procedures.

B. See Division 1 for submittal requirements.

C. Product Data: Provide product description, thermal characteristics, list of materials and thickness for each service, and locations.

D. Manufacturer's Instructions: Indicate installation procedures necessary to ensure acceptable workmanship and that installation standards will be achieved.

1.04 QUALITY ASSURANCE

A. Manufacturer Qualifications: Company specializing in manufacturing products of the type specified in this section with not less than three years of documented experience.

B. Applicator Qualifications: Company specializing in performing the type of work specified in this section, with minimum three years of experience and approved by manufacturer.

1.05 REGULATORY REQUIREMENTS

A. Materials: Flame spread/smoke developed rating of 25/50 in accordance with ASTM E 84.

1.06 DELIVERY, STORAGE, AND HANDLING

A. Accept materials on site in original factory packaging, labelled with manufacturer's identification, including product density and thickness.

B. Protect insulation from weather and construction traffic, dirt, water, chemical, and mechanical damage, by storing in original wrapping.

1.07 FIELD CONDITIONS

A. Maintain ambient temperatures and conditions required by manufacturers of adhesives, mastics, and insulation cements.

B. Maintain temperature during and after installation for minimum period of 24 hours.

PART 2 PRODUCTS

2.01 REQUIREMENTS FOR ALL PRODUCTS OF THIS SECTION

A. Surface Burning Characteristics: Flame spread/Smoke developed index of 25/50, maximum, when tested in accordance with ASTM E 84.

2.02 GLASS FIBER, RIGID BOARD

A. Manufacturer:
   1. Knauf Insulation: www.knaufusa.com.
   2. Johns Manville Corporation: www.jm.com.
   3. Owens Corning Corp: www.owenscorning.com.
   4. Or Approved Equal.

B. Insulation: ASTM C612; rigid, noncombustible blanket.
   1. 'K' ('Ksi') value: 0.24 at 75 degrees F (0.036 at 24 degrees C), when tested in accordance with ASTM C518.

2. Maximum service temperature: 250 degrees F
3. Maximum Water Vapor Sorption: 5.0 percent.
4. Density: 3.0 lb/cu ft (48 kg/cu m).
5. Minimum Noise Reduction Criteria: Per ASTM C423 0.7 for 1 inch (25 mm) thickness.

2.03 DUCT LINER

A. Manufacturers:
   1. Knauf Insulation: www.knaufusa.com.
   2. Johns Manville Corporation: www.jm.com.
   3. Owens Corning Corp: www.owenscorning.com.
   4. Or Approved Equal.

B. Insulation: Incombustible glass fiber complying with ASTM C 1071; flexible blanket; with acrylic polymer shown to be fungus and bacteria resistant by testing to ASTM G 21 impregnated surface and edge coat.
   1. Apparent Thermal Conductivity: Maximum of 0.25 at 75 degrees F (____ at 24 degrees C).
   2. Service Temperature: Up to 250 degrees F (121 degrees C).
   3. Minimum Noise Reduction Criteria: ASTM C423 0.7 for 1 inch (25 mm) thickness.

C. Fungus Resistance of Surface and Edge Coating: No visible growth, measured in accordance with ASTM G 21.

D. Adhesive: Waterproof, fire-retardant type, ASTM C916.
   1. Manufacturers:
      a. Carlisle Hardcast Model Glas-Grip GG-901.
   2. Waterproof type.

E. Liner Fasteners: Galvanized steel, welded with integral or press-on head.

PART 3 EXECUTION

3.01 EXAMINATION

A. Verify that ducts have been tested before applying insulation materials.

B. Verify that surfaces are clean, foreign material removed, and dry.

3.02 INSTALLATION

A. Install in accordance with manufacturer's instructions.

B. Install in accordance with NAIMA National Insulation Standards.

C. Indoor ducts exposed in conditioned spaces are not to be insulated, unless otherwise noted.

D. Outdoor ducts: All supply and return ducts installed outdoors shall be insulated with a minimum of 2" (R-8) insulation. Supply ducts shall be either double wall, or externally insulated. Return ducts can be double wall, lined, or externally insulated. If double wall duct is required, it will be so noted on the drawings.

E. Indoor ducts installed in unconditioned spaces shall be insulated with 2" (R-8) of insulation. Supply ducts shall always have external insulation. Return ducts shall have internal insulation for sound attenuation as shown on the plans. Where indoor ducts are exposed to view or in a return air plenum, the ducts shall be insulated with foil faced insulation. Concealed ducts not in an air stream may be open faced fiberglass.

F. Ductwork in mechanical rooms: All supply ductwork in mechanical rooms shall be insulated. Return ductwork shall be insulated when the mechanical room is ventilated by outside air. Examples of ventilated mechanical rooms are chiller rooms, boiler rooms, and fan rooms where the mechanical room is used as an outside air plenum. In fan rooms where the room is not used as a plenum, or is used as a return air plenum only, the return ducts need not be insulated. All ductwork in mechanical rooms shall be insulated with 1" (R-4.2) foil faced rigid ductboard.

G. External Duct Insulation Application:

1. Secure insulation with vapor barrier with wires and seal jacket joints with vapor barrier adhesive or tape to match jacket.
2. Install without sag on underside of duct. Use adhesive or mechanical fasteners where necessary to prevent sagging. Lift duct off trapeze hangers and insert spacers.
3. Seal vapor barrier penetrations by mechanical fasteners with vapor barrier adhesive.
4. Stop and point insulation around access doors and damper operators to allow operation without disturbing wrapping.

H. Duct and Plenum Liner Application:
1. Duct liner shall be installed per figures 2-22 and 2-23 of the SMACNA duct construction standards. All liner shall be both glued and spot pinned. All exposed edges shall be glued. The leading edges exposed to the oncoming air stream shall have a light gauge metal nosing to secure the insulation.
2. Adhere insulation with adhesive for 90 percent coverage.
3. Seal and smooth joints. Seal and coat transverse joints.
4. Seal liner surface penetrations with adhesive.
5. Duct dimensions indicated are net inside dimensions required for air flow. Increase duct size to allow for insulation thickness.

END OF SECTION

SECTION 23 0719
PIPING INSULATION

PART 1 GENERAL

1.01 APPLICATION

A. Heating Hot Water Piping

B. Chilled Water Piping

1.02 SECTION INCLUDES

A. Piping insulation.

B. Jackets and accessories.

1.03 REFERENCE STANDARDS

A. ASTM B209 - Standard Specification for Aluminum and Aluminum-Alloy Sheet and Plate; 2007.

B. ASTM C177 - Standard Test Method for Steady-State Heat Flux Measurements and Thermal Transmission Properties by Means of the Guarded Hot Plate Apparatus; 2004.

C. ASTM C547 - Standard Specification for Mineral Fiber Pipe Insulation; 2007.

D. ASTM E84 - Standard Test Method for Surface Burning Characteristics of Building Materials; 2010.

E. ASTM E96/E96M - Standard Test Methods for Water Vapor Transmission of Materials; 2005.

PART 2 PRODUCTS

2.01 REQUIREMENTS FOR ALL PRODUCTS OF THIS SECTION

A. Surface Burning Characteristics: Flame spread/Smoke developed index of 25/50, maximum, when tested in accordance with ASTM E 84.

2.02 GLASS FIBER

A. Manufacturers:
   1. Knauf Insulation: www.knaufusa.com.
   2. Johns Manville Corporation: www.jm.com.
   3. Owens Corning Corp: www.owenscorning.com.
   4. Or Approved Equal

B. Insulation: ASTM C547 ; rigid molded, noncombustible.
   1. Thickness: For pipe sizes 2" or greater, insulation shall be 1-1/2". For pipe sizes 1-1/2" or 1", insulation shall be 1". For pipe sizes less than 1", insulation shall be 3/4".
   2. 'K' ('Ksi') value: ASTM C177, 0.24 at 75 degrees F (0.035 at 24 degrees C).

C. Vapor Barrier Jacket: White kraft paper with glass fiber yarn, bonded to aluminized film; moisture vapor transmission when tested in accordance with ASTM E96/E96M of 0.02 perm-inches (0.029 ng/Pa s m).

2.03 JACKETS

A. PVC Plastic.
   1. Jacket: One piece molded type fitting covers and sheet material, off-white color.
      a. Minimum Service Temperature: 0 degrees F (-18 degrees C).
      b. Maximum Service Temperature: 150 degrees F (66 degrees C).
      c. Moisture Vapor Permeability: 0.002 perm inch (0.0029 ng/Pa s m), maximum, when tested in accordance with ASTM E96/E96M.
      d. Thickness: 15 mil (0.38 mm).
      e. Connections: Pressure sensitive color matching vinyl tape.
      f. Shall conform to ASTM D 1784.

B. Aluminum Jacket: ASTM B209 (ASTM B209M) formed aluminum sheet.
   1. Thickness: 0.016 inch (0.40 mm) sheet.
   2. Finish: Smooth.

3. Joining: Longitudinal slip joints and 2 inch (50 mm) laps.
4. Fittings: 0.016 inch (0.4 mm) thick die shaped fitting covers with factory attached protective liner.
5. Metal Jacket Bands: 3/8 inch (10 mm) wide; 0.010 inch (0.25 mm) thick stainless steel.

PART 3 EXECUTION

3.01 EXAMINATION

A. Verify that piping has been tested before applying insulation materials.

B. Verify that surfaces are clean and dry, with foreign material removed.

3.02 INSTALLATION

A. Insulate all heating hot water, chilled water, domestic hot water, and exterior domestic city water piping.

B. Install in accordance with manufacturer's instructions.

C. Insulated pipes conveying fluids below ambient temperature: Insulate entire system including fittings, valves, unions, flanges, strainers, flexible connections, pump bodies, and expansion joints.

D. Glass fiber insulated pipes conveying fluids below ambient temperature:
   1. Provide vapor barrier jackets, factory-applied or field-applied. Secure with self-sealing longitudinal laps and butt strips with pressure sensitive adhesive. Secure with outward clinch expanding staples and vapor barrier mastic.
   2. Insulate fittings, joints, and valves with molded insulation of like material and thickness as adjacent pipe. Finish with glass cloth and vapor barrier adhesive or PVC fitting covers.

E. Glass fiber insulated pipes conveying fluids above ambient temperature:
   1. Provide standard jackets, with or without vapor barrier, factory-applied or field-applied. Secure with self-sealing longitudinal laps and butt strips with pressure sensitive adhesive. Secure with outward clinch expanding staples.
   2. Insulate fittings, joints, and valves with insulation of like material and thickness as adjoining pipe. Finish with glass cloth and adhesive or PVC fitting covers.

F. Inserts and Shields:
   1. Application: Piping 1-1/2 inches (40 mm) diameter or larger.
   2. Shields: Galvanized steel between pipe hangers or pipe hanger rolls and inserts.
   3. Insert location: Between support shield and piping and under the finish jacket.
   4. Insert configuration: Minimum 6 inches (150 mm) long, of same thickness and contour as adjoining insulation; may be factory fabricated.
   5. Insert material: Hydrous calcium silicate insulation or other heavy density insulating material suitable for the planned temperature range.

G. Continue insulation through walls, sleeves, pipe hangers, and other pipe penetrations. Finish at supports, protrusions, and interruptions.

H. Pipe Exposed in Mechanical Equipment Rooms or Finished Spaces (less than 10 feet (3 meters) above finished floor): Finish with canvas jacket sized for finish painting and paint. For pipes over 10 feet above finished floor or where called for on plans, finish with PVC jacketing.

I. Exterior Applications: Provide vapor barrier jacket. Insulate fittings, joints, and valves with insulation of like material and thickness as adjoining pipe, and finish with glass mesh reinforced vapor barrier cement. Cover with aluminum jacket and fittings with seams located on bottom side of horizontal piping.

END OF SECTION

SECTION 23 2113
HYDRONIC PIPING

PART 1 GENERAL

1.01 SECTION INCLUDES

A. Pipe and pipe fittings for:
   1. Heating water piping system.
   2. Chilled water piping system.
   3. Condenser water piping system.
   4. Equipment drains and overflows.
   5. Pipe hangers and supports.

B. Valves:
   1. Gate valves.
   2. Globe or angle valves.
   3. Ball valves.
   4. Butterfly valves.
   5. Check valves.

1.02 REFERENCE STANDARDS

A. ASME B16.3 - Malleable Iron Threaded Fittings; The American Society of Mechanical Engineers; 1998.

B. ASME B16.18 - Cast Copper Alloy Solder Joint Pressure Fittings; The American Society of Mechanical Engineers; 2001 (ANSI B16.18).

C. ASME B16.22 - Wrought Copper and Copper Alloy Solder Joint Pressure Fittings; The American Society of Mechanical Engineers; 1995, 1998 Addenda.

D. ASME B31.9 - Building Services Piping; The American Society of Mechanical Engineers; 1996 (ANSI/ASME B31.9).

E. ASTM A 234/A 234M - Standard Specification for Piping Fittings of Wrought Carbon Steel and Alloy Steel for Moderate and High Temperature Service; 2001a.

F. ASTM B 32 - Standard Specification for Solder Metal; 2000.

G. ASTM B 88 - Standard Specification for Seamless Copper Water Tube; 1999.

H. ASTM B 88M - Standard Specification for Seamless Copper Water Tube (Metric); 1999.

I. ASTM F 708 - Standard Practice for Design and Installation of Rigid Pipe Hangers; 1992 (Reapproved 1997).

1.03 SYSTEM DESCRIPTION

A. Where more than one piping system material is specified, ensure system components are compatible and joined to ensure that the integrity of the system is not jeopardized. Provide necessary joining fittings. Ensure flanges, unions, and couplings for servicing are consistently provided.

B. Use grooved mechanical couplings and fasteners in accessible locations only.

C. Use unions, flanges, and couplings downstream of valves and at equipment or apparatus connections. Do not use direct welded or threaded connections to valves, equipment, or other apparatuses.

D. Use non-conducting dielectric connections whenever jointing dissimilar metals in open systems.

E. Use check valves on discharge of pumps where multiple pumps discharge into a common manifold.

F. Provide pipe hangers and supports in accordance with SMACNA Standards, unless otherwise specified. Seismic bracing shall be provided at the intervals recommended by SMACNA.

G. Provide pipe hangers and supports in accordance with ASME B31.9 unless indicated otherwise.

H. Use only butterfly valves in chilled and condenser water systems for throttling and isolation service.

I. All butterfly valves shall be lug end type.

PART 2 PRODUCTS

2.01 HEATING WATER PIPING, ABOVE GROUND

A. Steel Pipe: ASTM A53/A53M, Schedule 40, black, using one of the following joint types:
   1. Welded Joints: ASTM A 234/A 234M, forged steel welding type fittings; AWS D1.1 welded.
   2. Threaded Joints: ASTM B16.3, malleable iron fittings.

B. Copper Tube: ASTM B88 (ASTM B88M), Type L (B), drawn, using one of the following joint types:
   1. Solder Joints: ASME B16.18 cast brass/bronze or ASME B16.22 solder wrought copper fittings.
      a. Solder: ASTM B32 lead-free solder, HB alloy (95-5 tin-antimony) or tin and silver.
   2. Tee Connections: Wrought, cast, or mechanically extracted collars with notched and dimpled branch tube.

2.02 CHILLED AND CONDENSER WATER PIPING, (ABOVE GRADE).

A. Same as Heating Water Piping, except grooved pipe (per AWWA C606) is also acceptable where fittings are accessible.

2.03 PIPE HANGERS AND SUPPORTS

A. Provide hangers and supports that comply with MSS SP-58.

B. Hangers for Pipe Sizes 1/2 to 1-1/2 Inch (13 to 38 mm): Malleable iron, adjustable swivel, split ring.

C. Hangers for Cold Pipe Sizes 2 Inches (50 mm) and Over: Carbon steel, adjustable, clevis.

D. Multiple or Trapeze Hangers: Steel channels with welded spacers and hanger rods.

E. Multiple or Trapeze Hangers for Hot Pipe Sizes 6 Inches (150 mm) and Over: Steel channels with welded spacers and hanger rods, cast iron roll.

F. Wall Support for Pipe Sizes to 3 Inches (76 mm): Cast iron hook.

G. Wall Support for Pipe Sizes 4 Inches (100 mm) and Over: Welded steel bracket and wrought steel clamp.

H. Wall Support for Hot Pipe Sizes 6 Inches (150 mm) and Over: Welded steel bracket and wrought steel clamp with adjustable steel yoke and cast iron roll.

I. Vertical Support: Steel riser clamp.

J. Hanger Rods: Mild steel threaded both ends, threaded one end, or continuous threaded.

K. Inserts: Malleable iron case of galvanized steel shell and expander plug for threaded connection with lateral adjustment, top slot for reinforcing rods, lugs for attaching to forms; size inserts to suit threaded hanger rods.

2.04 GLOBE OR ANGLE VALVES

A. Manufacturers:
   1. Nibco, Stockham, Milwaukee, Keystone or approved equal.

B. Up To and Including 2 Inches (50 mm):
   1. Bronze body, bronze trim, screwed bonnet, rising stem and handwheel, inside screw with backseating stem, renewable composition disc and bronze seat, solder ends.

C. Over 2 Inches (50 mm):
   1. Iron body, bronze trim, bolted bonnet, rising stem, handwheel, outside screw and yoke, rotating plug-type disc with renewable seat ring and disc, flanged ends.

2.05 BALL VALVES

A. Manufacturers:

1. Nibco, Stockham, Milwaukee, Keystone or approved equal.

B. Up To 2 Inches (50 mm)
   1. Bronze one piece body, chrome plated brass ball, teflon seats and stuffing box ring, lever handle with balancing stops, solder ends with union.

2.06 BUTTERFLY VALVES, CHILLED WATER, 2" TO 4"

A. Manufacturers:
   1. Keystone, Stockham, or approved equal.

B. Body: Cast or ductile iron with resilient replaceable EPDM seat and stem seals, lug ends, 410 stainless steel stem, extended neck.

C. Disc: Aluminum bronze.

D. Operator: 10 position lever handle.

2.07 BUTTERFLY VALVES, CONDENSER WATER, 2" TO 4"

A. Same as chilled water except stainless steel disk.

2.08 BUTTERFLY VALVES, 5" AND LARGER.

A. Same as 4" and smaller, except gear operated. Where valves are installed more than 12 feet above the floor, operators shall be chain operated.

2.09 SWING CHECK VALVES

A. Manufacturers:
   1. Nibco, Stockham, Milwaukee, or approved equal.

B. Up To and Including 2 Inches (50 mm):
   1. Bronze body, bronze trim, bronze rotating swing disc with composition disc, solder ends.

C. Over 2 Inches (50 mm):
   1. Iron body, bronze trim, bronze or bronze faced rotating swing disc, renewable disc and seat, flanged ends.

2.10 FLOW CONTROLS

A. Manufacturers:
   1. Bell and Gosset, Armstrong, or approved equal.

B. Construction: Class 125, Brass or bronze body with union on inlet and outlet, temperature and pressure test plug on inlet and outlet, blowdown/backflush drain, 100 percent shut off.

C. Calibration: Control flow within 5 percent of selected rating, over operating pressure range of 10 times minimum pressure required for control, maximum minimum pressure 3.5 psi psi (24 kPa kPa).

PART 3 EXECUTION

3.01 PREPARATION

A. Ream pipe and tube ends. Remove burrs. Bevel plain end ferrous pipe.

B. Prepare pipe for grooved mechanical joints as required by coupling manufacturer.

C. Remove scale and dirt on inside and outside before assembly.

D. Prepare piping connections to equipment with flanges or unions.

E. Keep open ends of pipe free from scale and dirt. Protect open ends with temporary plugs or caps.

F. After completion, fill, clean, and treat systems. Refer to Section 23 2500 for additional requirements.

3.02 INSTALLATION

A. Install in accordance with manufacturer's instructions.

B. Verify Pipe Routing With Schematic.

C. Route piping in an orderly manner, parallel to building structure, and maintain gradient.

D. Install piping to conserve building space and to avoid interfere with use of space.

E. Group piping whenever practical at common elevations.

F. Slope piping and arrange to drain at low points.

G. Pipe Hangers and Supports:
   1. Install in accordance with ASME B31.9.
   2. Support horizontal piping as scheduled.
   3. Install hangers to provide minimum 1/2 inch (13 mm) space between finished covering and adjacent work.
   4. Place hangers within 12 inches (300 mm) of each horizontal elbow.
   5. Use hangers with 1-1/2 inch (38 mm) minimum vertical adjustment. Design hangers for pipe movement without disengagement of supported pipe.
   6. Support vertical piping at every floor. Support riser piping independently of connected horizontal piping.
   7. Where several pipes can be installed in parallel and at the same elevation, provide multiple or trapeze hangers.

H. Provide clearance in hangers and from structure and other equipment for installation of insulation and access to valves and fittings. Refer to Section 23 0719.

I. Provide access where valves and fittings are not exposed.

J. Install valves with stems upright or horizontal, not inverted.

END OF SECTION

SECTION 23 2114
HYDRONIC SPECIALTIES

PART 1 GENERAL

1.01 SECTION INCLUDES

A. Expansion tanks.

B. Air vents.

C. Strainers.

D. Pump suction fittings.

E. Combination fittings.

F. Relief valves.

PART 2 PRODUCTS

2.01 AIR VENTS

A. Manufacturers:
   1. Honeywell / Braukmann Model EA79A1004 with built-in shut-off mechanism to allow removal for cleaning and maintenance. Valve shall have threaded vent connection (for piping to nearest drain), or approved equal.
   2. For other air vents with out a built-in shut-off to allow for removal, a separate shut off valve shall be included immediately before the air vent to allow for removal for cleaning and maintenance of the air vent.

2.02 STRAINERS

A. Manufacturers:
   1. Armstrong, Vitaulic, or approved equal.

B. Size 2 inch (50 mm) and Under:
   1. Screwed brass or iron body for 175 psi (1200 kPa) working pressure, Y pattern with 1/32 inch (0.8 mm) stainless steel perforated screen.

C. Size 2-1/2 inch (65 mm) to 4 inch (100 mm):
   1. Flanged iron body for 175 psi (1200 kPa) working pressure, Y pattern with 3/64 inch (1.2 mm) stainless steel perforated screen.

D. Size 5 inch (125 mm) and Larger:
   1. Flanged iron body for 175 psi (1200 kPa) working pressure, basket pattern with 1/8 inch (3.2 mm) stainless steel perforated screen.

2.03 SUCTION DIFFUSERS

A. Manufacturers:
   1. Bell and Gossett or approved equal.

B. Fitting: Angle pattern, cast-iron body, threaded for 2 inch (50 mm) and smaller, flanged for 2-1/2 inch (65 mm) and larger, rated for 175 psi (1200 kPa) working pressure, with inlet vanes, cylinder strainer with 3/16 inch (5 mm) diameter openings, disposable fine mesh strainer to fit over cylinder strainer, and permanent magnet located in flow stream and removable for cleaning.

C. Accessories: Adjustable foot support, blowdown tapping in bottom, gage tapping in side.

2.04 COMBINATION PUMP DISCHARGE VALVES

A. Manufacturers: Bell and Gossett, Armstrong, Victaulic or approved equal

B. Valves: Straight or angle pattern, flanged cast-iron valve body with bolt-on bonnet for 175 psi (1200 kPa) operating pressure, non-slam check valve with spring-loaded bronze disc and seat, stainless steel stem, and calibrated adjustment permitting flow regulation.

2.05 RELIEF VALVES

A. Manufacturers:

1. Armstrong, Hoffman, or equal

B. Bronze body, teflon seat, stainless steel stem and springs, automatic, direct pressure actuated, capacities ASME certified and labelled.

PART 3 EXECUTION

3.01 INSTALLATION

A. Install specialties in accordance with manufacturer's instructions.

B. Where large air quantities can accumulate, provide enlarged air collection standpipes.

C. Provide manual air vents at system high points and as indicated.

D. For automatic air vents in ceiling spaces or other concealed locations, provide vent tubing to nearest drain.

E. Provide valved drain and hose connection on strainer blow down connection.

F. Provide pump suction diffusers on suction side of base mounted centrifugal pumps where indicated or where space does not allow a straight section of pipe 6 pipe diameters long at the pump inlet. Remove temporary strainers after cleaning systems.

G. Provide combination pump discharge valve on discharge side of base mounted centrifugal pumps where indicated or where multiple pumps discharge into a common manifold, and a check valve is needed to prevent backflow through inactive pumps.

H. Provide relief valves on pressure tanks, low pressure side of reducing valves, heat exchangers, and expansion tanks.

I. Select system relief valve capacity so that it is greater than make-up pressure reducing valve capacity. Select equipment relief valve capacity to exceed rating of connected equipment.

J. Pipe relief valve and automatic air vent outlets to nearest floor drain.

K. Where one line vents several relief valves, make cross sectional area equal to sum of individual vent areas.

END OF SECTION

SECTION 23 3100
DUCTS AND PLENUM CASINGS

PART 1 GENERAL

1.01 SECTION INCLUDES

A. Metal ductwork.

B. Flexible ductwork.

C. Casing and plenums.

D. Duct Cleaning.

1.02 REFERENCE STANDARDS

A. ASTM A 666 - Standard Specification for Annealed or Cold-Worked Austenitic Stainless Steel Sheet, Strip, Plate, and Flat Bar; 2000.

B. ICC-ES AC193 - Acceptance Criteria for Mechanical Anchors in Concrete Elements; 2010.

C. NFPA 90A - Standard for the Installation of Air-Conditioning and Ventilating Systems; National Fire Protection Association; 2009.

D. NFPA 90B - Standard for the Installation of Warm Air Heating and Air Conditioning Systems; National Fire Protection Association; 2009.

E. SMACNA (DCS) - HVAC Duct Construction Standards - Metal and Flexible; Sheet Metal and Air Conditioning Contractors' National Association; 2005.

F. Rustoleum Technical Bulletin #8717

G. KM Technical Bulletin #B-95

1.03 SUBMITTALS

A. Shop Drawings on Plenum Casings for Built-up Air Handlers.

B. Project Record Documents: Record actual locations of ducts and duct fittings. Record changes in fitting location and type. Show additional fittings used.

1.04 QUALITY ASSURANCE

A. Manufacturer Qualifications: Company specializing in manufacturing the type of products specified in this section, with minimum three years of documented experience.

B. Installer Qualifications: Company specializing in performing the type of work specified in this section, with minimum 3 years of documented experience.

C. All paint colors are to be selected and/or approved by the Architect, Owner, or designated representative. Sample colors are to be provided prior to actual application to the project.

1.05 MATERIAL HANDLING AND STORAGE.

A. All ductwork and plenum casings must be protected from damage, and kept clean prior to installation. If stored inside, store on masonite to protect floors. Identify materials with contractor name, and project work order number. If stored outside, ductwork shall be covered and sealed to keep clean and dry.

B. Construct ductwork to NFPA 90A standards.

1.06 ENVIRONMENTAL HANDLING AND STORAGE

A. Do not install duct sealants when temperatures are less than those recommended by sealant manufacturers. Do not seal outdoor ductwork when rain is probable.

B. Maintain temperatures within acceptable range during and after installation of duct sealants.

PART 2 PRODUCTS

2.01 DUCT ASSEMBLIES

A. All Ducts: Galvanized steel, unless otherwise indicated.

B. Low Pressure Supply (Downstream of VAV's and FSD's and all other than "High Pressure Supply"): 2 inch w.g. (500 Pa) pressure class,

C. Hign Pressure Supply (in mechanical rooms and upstream of VAV's and FSD's): [4] inch w.g. pressure class.

2.02 MATERIALS

A. Double Wall Ducts
   1. All exterior ductwork shall be constructed of double wall, insulated, galvanized sheet metal construction, unless the plans specifically call for a different type of construction. Double wall duct shall be United McGill K-27 or equal. Minimum outer shell metal thickness is 22 ga. Inner and outer shell thicknesses shall both be determined by Smacna Standards for the size of the duct, and pressure of the system. Insulation thickness shall be 1-1/2". Connectors shall be 4 bolt type, with continuous butyl gasket.

B. Hanger Rod: ASTM A36/A36M; steel, galvanized; threaded both ends, threaded one end, or continuously threaded.

C. Hanger Fasteners: Attach hangers to structure using appropriate fasteners, as follows:
   1. Concrete Wedge Expansion Anchors: Complying with ICC-ES AC193.
   2. Manufacturers:
      a. Hilti : www.us.hilti.com
      b. Or approved Equal.

2.03 DUCTWORK FABRICATION

A. Fabricate and support in accordance with SMACNA HVAC Duct Construction Standards - Metal and Flexible, and as indicated. Provide duct material, gages, reinforcing, and sealing for operating pressures indicated.

B. Construct T's, bends, and elbows with radius of not less than 1-1/2 times width of duct on centerline. Where not possible and where rectangular elbows must be used, provide air foil turning vanes.

C. Increase duct sizes gradually, not exceeding 15 degrees divergence wherever possible; maximum 30 degrees divergence upstream of equipment and 45 degrees convergence downstream.

D. Provide standard 45 degree lateral wye takeoffs unless otherwise indicated where 90 degree conical tee connections may be used.

2.04 PLENUM CASINGS

A. Air handler plenums: 6 inch w.g. construction.

B. The drawings show the general layout of the plenum casings, but it shall be the contractor's responsibility to design and install a plenum casing system that meets these requirements and is structurally sound. As a minimum, all plenum walls shall be a 2" thick sandwich of insulation, with 18 gage gsm on the outside and 22 gage gsm on the inside. Heavier sheet metal gages, and greater panel thicknesses (4" for example) as well as structural reinforcing members may be required to meet the structural requirements of the plenum system. The contractor may use a factory built plenum wall system such as the United McGill "Uni-Housing" or the contractor may fabricate their own plenum wall system. In either case, it shall be the contractor's responsibility to demonstrate to the engineer (or city plan checker if required) that the plenum casing will be structurally sound. The structural requirements the plenum casing must meet include (1) withstanding the maximum pressure the fans can produce, (2) CBC (IBC) seismic requirements, (3) live loads on the plenum roof where applicable. The plenum roof must support a live load of 20 lbs per square foot when the plenum ceiling is used as a platform for access to fans, dampers, or equipment installed above the plenum ceiling. Whenever plenum roofs are used as access platforms, the contractor will need to retain the services of a civil or structural engineer to provide calculations demonstrating that live load requirements are met. In general, all casings shall be fabricated in accordance with Chapter 6 of the SMACNA HVAC Duct Construction Standards. All plenum casings shall be sealed air tight and be neat, clean,

and finished in appearance. All metals shall be galvanized or epoxy primed and painted as described elsewhere in this specification section.

C. Mount floor mounted casings on 4 inch (100 mm) high concrete curbs. At floor, screw or rivet panels on 8 inch (200 mm) centers to angles. Where floors are acoustically insulated, provide liner of 18 gage (1.20 mm) galvanized expanded metal mesh supported at 12 inch (300 mm) centers, turned up 12 inches (300 mm) at sides with sheet metal shields.
   1. Reinforce door frames with steel angles tied to horizontal and vertical plenum supporting angles. Install hinged access doors where indicated or required for access to equipment for cleaning and inspection.

PART 3 EXECUTION

3.01 INSTALLATION

A. Only rod hangers shall be used to support ductwork that is exposed. In no case shall strap be used.

B. Install in accordance with manufacturer's instructions.

C. Flexible Ducts: In all areas, connect to metal ducts with stainless steel draw bands.

D. Duct sizes indicated are inside clear dimensions unless noted otherwise. For lined or double wall ducts, maintain sizes inside lining.

E. Support ducts per SMACNA standards as a minimum, or as shown on the drawings.

F. Install and seal metal and flexible ducts in accordance with SMACNA HVAC Duct Construction Standards - Metal and Flexible.

G. Locate ducts with sufficient space around equipment to allow normal operating and maintenance activities.

H. Use double nuts and lock washers on threaded rod supports.

I. Connect t-bar grilles or diffusers to low pressure ducts with 5 feet (1.5 m) maximum length of flexible duct held in place with strap or clamp.

J. Connect flexible ducts to metal ducts with only stainless steel draw bands.

K. Do not attach ductwork to the gray iron or allow it to directly contact the duct.

L. Set plenum doors 6 to 12 inches (150 to 300 mm) above floor. Arrange door swings so that fan static pressure holds door in closed position.

M. Provide duct liner and insulation as specified in Section 23 0713 - Duct Insulation.

N. During construction provide temporary closures of metal or taped polyethylene on open ductwork to prevent construction dust from entering ductwork system.

O. Paint all exposed exterior ductwork, and non-galvanized steel whether interior or exterior.

3.02 SEALING DUCTS

A. Sealing indoor ducts: seal all ducts in mechanical rooms or concealed spaces. Exposed ducts in spaces need not be sealed, however, where 4-bolt connector duct systems are used, gasket material shall always be used at the connections.

3.03 CLEANING

A. All return ducts that are converted to supply ducts shall be thoroughly cleaned before being put into service as supply ducts.

B. Clean duct systems either manually by wiping out the ducts or with high power vacuums to remove all loose dust or dirt. If vacuums are used, the vacuum exhaust must either discharge outside the building, or into a HEPA filtering system. Provide adequate access into ductwork (remove grilles or add access doors) for cleaning purposes. Duct systems to be cleaned shall be inspected by a city representative, or by the engineer before being put into service.

END OF SECTION

SECTION 23 3300
AIR DUCT ACCESSORIES

PART 1 GENERAL

1.01 SECTION INCLUDES

A. Air turning devices/extractors.

B. Backdraft dampers.

C. Combination fire and smoke dampers.

D. Duct access doors.

E. Fire dampers.

F. Flexible duct connections.

G. Mixed air dampers.

H. Volume control dampers.

I. Fixed Air Louvers

J. Duct Smoke Detector

1.02 REFERENCE STANDARDS

A. NFPA 90A - Standard for the Installation of Air-Conditioning and Ventilating Systems; National Fire Protection Association; 2009.

B. NFPA 92A - Standard for Smoke-Control Systems Utilizing Barriers and Pressure Differences; 2009.

C. SMACNA (DCS) - HVAC Duct Construction Standards - Metal and Flexible; Sheet Metal and Air Conditioning Contractors' National Association; 2005.

D. UL 33 - Heat Responsive Links for Fire-Protection Service; Underwriters Laboratories Inc.; Current Edition, Including All Revisions.

E. UL 555 - Standard for Fire Dampers; Underwriters Laboratories Inc.; Current Edition, Including All Revisions.

F. UL 555S - Standard for Leakage Rated Dampers for Use in Smoke Control Systems; Underwriters Laboratories Inc.; Current Edition, Including All Revisions.

PART 2 PRODUCTS

2.01 TURNING VANE

A. Provide turning vane at all square elbows, regardless of whether the duct is supply, return, or exhaust. All turning vane shall be double width, air-foil type. Use 2" blade for up to 24" long blades, and 4" width for blade lengths over 24". Use acoustic turning vane where noted on the plans. Turning vane shall be installed using the track provided by the vane manufacturer, with vane at every tab location (vanes at every other tab will not be accepted).

2.02 BACKDRAFT DAMPERS (LIGHT DUTY)

A. Manufacturers:
   1. Louvers & Dampers, Inc.: www.louvers-dampers.com
   2. Ruskin Company; Model BD2/A2.: www.Ruskin.com
   3. Or Approved Equal

B. Gravity Backdraft Dampers shall have .09" extruded 6063T5 aluminum frame, .050 extruded aluminum blades with vinyl edge seals, synthetic bearings, and 1/2" linkage. Maximum spot velocity is 2500 fpm. Temperature range, of -40F to 200F.

2.03 BACKDRAFT DAMPERS (STANDARD DUTY)

A. Manufacturers:
   1. Louvers & Dampers, Inc.: www.louvers-dampers.com
   2. Ruskin Company; Model CBD-6: www.Ruskin.com

3. Or Approved Equal

B. Counterbalanced, gravity backdraft dampers shall have .125" extruded aluminum frame, .070" extruded aluminum blades with vinyl edge seals, synthetic bearings, and 1/2" linkage. Maximum average velocity is 2500 fpm, maximum spot velocity is 3500 fpm. Temperature range, of -40F to 200F.

2.04 BACKDRAFT DAMPERS (HEAVY DUTY)

A. Manufacturers:
   1. Louvers & Dampers, Inc: www.louvers-dampers.com.
   2. Ruskin Company; Model CBS92: www.ruskin.com.
   3. Or Approved Equal.

B. Counterbalanced Gravity Backdraft Dampers shall have 12 ga galvanized steel aluminum frame, extruded aluminum air foil blades with vinyl edge seals, 3/4" axles, ball bearings, and flat bar linkage exposed to air stream. Maximum average velocity is 4000 fpm, maximum Temperature range, of -40F to 250F. Provide label if concealed in ductwork.

2.05 COMBINATION FIRE AND SMOKE DAMPERS

A. Manufacturers:
   1. Louvers & Dampers, Inc: www.louvers-dampers.com.
   2. Ruskin Company; Model FSD60: www.ruskin.com.
   3. Or Approved Equal.

B. Ultra low leakage, 1-1/2 hour rated combination fire/smoke damper. Damper shall have 16 gauge frame, 14 gauge airfoil blade, with blade seal, 1/2" axle, stainless steel bearings, Class 1-A leakage rating. Equip with 120 volt Belimo actuator, powered open, fail to close, with optional blade position indicator switches, and TS150 fire stat system.

2.06 DUCT ACCESS DOORS

A. Manufacturers:
   1. Nailor Industries Inc: www.nailor.com.
   2. Ruskin Company; Model ADH-22: www.ruskin.com.

B. Fabrication: Double wall construction, rigid and close-fitting of galvanized steel with sealing gaskets and quick fastening locking devices. Door to have 1 inch (25 mm) thick insulation with sheet metal cover.

C. Access doors with sheet metal screw fasteners are not acceptable.

2.07 DUCT TEST HOLES

A. Temporary Test Holes: Cut or drill in ducts as required. Cap with neat patches, neoprene plugs, threaded plugs, or threaded or twist-on metal caps.

2.08 FIRE DAMPERS

A. Manufacturers:
   1. Louvers & Dampers, Inc: www.louvers-dampers.com.
   2. Ruskin Company; Model FD-60, or approved equal.

B. Fire damper (vertical mount): shall have 14 ga aluminum air foil blades, stainless steel sleeve bearings, and concealed linkages. Fire dampers shall be 1-1/2 hour rated, UL approved, NFPA approved, and CSFM approved.

C. Fusible Links: UL 33, separate at 160 degrees F (71 degrees C) with adjustable link straps for combination fire/balancing dampers.

2.09 FLEXIBLE DUCT CONNECTIONS

A. Fabricate in accordance with SMACNA HVAC Duct Construction Standards - Metal and Flexible, and as indicated.

B. Flexible Duct Connections: Fabric crimped into metal edging strip.
   1. Fabric: UL listed fire-retardant neoprene coated woven glass fiber fabric to NFPA 90A, minimum density 30 oz per sq yd (1.0 kg/sq m).

2. Metal: 3 inches (75 mm) wide, 24 gage (0.6 mm) thick galvanized steel.

2.10 MIXED AIR DAMPERS

A. Manufacturers:
   1. Louvers & Dampers, Inc: www.louvers-dampers.com.
   2. Ruskin Company; Model CD30AF-1: www.ruskin.com.

B. Application: Mixed air dampers (also known as economizer dampers) include the return air, outside air, and exhaust air dampers of a fan system economizer. These mixed air damper specifications apply to built-up fan systems or custom fan systems (not to packaged equipment).

C. Dampers shall be heavy-duty, galvanized, air foil type, Ruskin CD-30AF-1 or approved equal. Maximum single section size of 48 x 72. Damper linkage in the air stream. 16 ga double skin blades. blade and edge seals. Typical for all new outside air, return, and exhaust dampers for air handlers unless noted otherwise.

2.11 VOLUME CONTROL DAMPERS

2.12 VOLUME CONTROL DAMPERS. --- LOW VELOCITY.

A. Manufacturers:
   1. Louvers & Dampers, Inc.: louvers-dampers.com
   2. Ruskin Manufacturing: : www.ruskin.com
      a. Round Model [CDRS-25]
      b. Rectangular Model [CD-35]
   3. Or Approved Equal.
      a. Rectangular: 16 gage galvanized frame, 16 ga galvanized formed blades, 1/2" axles.
      b. Round: 20 gage galvanized frame, 14 ga galvanized formed blades, 1/2" axles.
   4. Single Blade Dampers: Fabricate for duct sizes up to 6 x 30 inch (150 x 760 mm).
   5. Quadrants:
      a. Provide locking, indicating quadrant regulators on single and multi-blade dampers.
      b. On insulated ducts mount quadrant regulators on stand-off mounting brackets, bases, or adapters.
      c. Where rod lengths exceed 30 inches (750 mm) provide regulator at both ends.

2.13 VOLUME CONTROL DAMPERS --- HIGH VELOCITY

A. Manufacturers:
   1. Rectangular : Ruskin CD-60 or approved equal. 16 gage galvanized frame, galvanized air foil blade with two layers of 14 gage, 1/2" axles. Dampers shall be low leakage with blade and edge seals.
   2. Round: Ruskin CDR-25 heavy duty control damper or approved equal. 12 gage galvanized frame, 12 ga galv formed blades, 1/2" axles up to 22", 3/4" axles above 22" Dampers shall be low leakage with blade and edge seals.
   3. Louvers & Dampers, Inc..
   4. Ruskin Manufacturing: www.Ruskin.com
      a. Round Model [CDR-25]
      b. Rectangular Model [CD-60]
   5. Or Approved Equal
      a. Round: Heavy duty control damper. 12 gage galvanized frame, 12 gage galvanized formed blades, 1/2" axles. Dampers shall be low leakage with blade and edge seals.
      b. Rectangular: Heavy duty control damper. 16 gage galvanized frame, galvanized air foil blade with two layers of 14 gage, 1/2" axles. Dampers shall be low leakage with blade and edge seals.
   6. Single Blade Dampers: Fabricate for duct sizes up to 6 x 30 inch (150 x 760 mm).
   7. Quadrants:
      a. Provide locking, indicating quadrant regulators on single and multi-blade dampers.
      b. On insulated ducts mount quadrant regulators on stand-off mounting brackets, bases, or adapters.

c. Where rod lengths exceed 30 inches (750 mm) provide regulator at both ends.

2.14 LOW LEAK AND STAINLESS DAMPERS.

A. Where "low leak" or "stainless steel" dampers are called for on the plans, they shall be equivalent to the dampers specified above, except for these special features.

2.15 FIXED AIR LOUVERS

A. Manufacturers:
   1. Ruskin Model L*375D.

B. Steel drainable type with a drain gutter in each blade and downspouts in frame jambs and mullions. Frame and blades to be formed galvanized steel. Screen shall be contained within a removable frame.

2.16 DUCT SMOKE DETECTORS

A. Smoke Detector shall be UL listed and State Fire Marshall approved and compatible with the existing fire alarm system. Detector shall be photoelectric type with duct sampling tube extending the width of the duct, visual indication of detector actuation, and in-duct mounting housing. The unit shall have two sets of auxiliary contacts for (1) unit control shutdown and (2) connection to the existing fire alarm control panel and combination fire smoke dampers. The unit shall include LED indication for power and alarm status visible from the front of the unit, and a manual test/reset button. Voltage as shown on the drawings. Confirm final location of detector with Owner.

PART 3 EXECUTION

3.01 INSTALLATION

A. Install accessories in accordance with manufacturer's instructions, NFPA 90A, and follow SMACNA HVAC Duct Construction Standards - Metal and Flexible. Refer to Section 23 3100 for duct construction and pressure class.

B. Provide backdraft dampers on systems with multiple supply fans and on exhaust fans.

C. Provide 14 x 14 minimum (larger if shown on the plans) access doors for access and inspection of all fire smoke dampers, filter banks, and backdraft dampers.

D. Provide duct access doors for inspection and cleaning before filters, coils, fans, automatic dampers, at fire dampers, combination fire and smoke dampers, and elsewhere as indicated. Provide for cleaning kitchen exhaust ducts in accordance with NFPA 96. Review locations prior to fabrication.

E. Provide fire dampers, combination fire and smoke dampers, and smoke dampers at locations indicated, where ducts and outlets pass through fire rated components, and where required by authorities having jurisdiction. Install with required perimeter mounting angles, sleeves, breakaway duct connections, corrosion resistant springs, bearings, bushings and hinges.

F. Demonstrate re-setting of fire dampers to The City's representative.

G. At equipment supported by vibration isolators, provide flexible duct connections immediately adjacent to the equipment; see Section 22 0548.

H. Provide balancing dampers at points on supply, return, and exhaust systems where branches are taken from larger ducts as required for air balancing. Install minimum 2 duct widths from duct take-off.

I. Where ducts pass through rated assemblies, install fire smoke dampers unless noted otherwise. Fire dampers are only to be used where specifically noted.

J. Provide balancing dampers on duct take-off to diffusers, grilles, and registers, regardless of whether dampers are specified as part of the diffuser, grille, or register assembly.

K. When installing heavy duty backdraft dampers (with counterbalances) the contractor shall install the damper so that the counterbalance swings freely. Provide sleeve extensions as needed to allow the counterbalance to swing freely. The counterbalance are shall be positioned so that the weight counterbalances the weight of the blades and reduces the force required to open the

damper. Make sure the weight will not hold the damper in the open position. Adjust arm and weight so the damper moves freely through the full range of motion with a minimum amount of force.

L. Contractor shall verify all sizes prior to placing order for any dampers.

M. Contractor shall mark all concealed damper shafts to indicate the damper's position.

END OF SECTION

SECTION 23 3416
CENTRIFUGAL HVAC FANS

PART 1 GENERAL

1.01 SECTION INCLUDES

A. Radial centrifugal fans.

1.02 REFERENCE STANDARDS

A. ABMA STD 9 - Load Ratings and Fatigue Life for Ball Bearings; American Bearing Manufacturers Association, Inc.; 1990 (Reapproved 2008).

B. ABMA STD 11 - Load Ratings and Fatigue Life for Roller Bearings; American Bearing Manufacturers Association, Inc.; 1990 (Reapproved 2008).

C. AMCA 99 - Standards Handbook; Air Movement and Control Association International, Inc.; 2010.

D. AMCA 210 - Laboratory Methods of Testing Fans for Aerodynamic Performance Rating; Air Movement and Control Association International, Inc.; 2007 (ANSI/AMCA 210, same as ANSI/ASHRAE 51).

E. AMCA (DIR) - [Directory of] Products Licensed Under AMCA International Certified Ratings Program; Air Movement and Control Association International, Inc.; http://www.amca.org/certified/search/company.aspx.

F. AMCA 300 - Reverberant Room Method for Sound Testing of Fans; Air Movement and Control Association International, Inc.; 2008.

G. AMCA 301 - Methods for Calculating Fan Sound Ratings from Laboratory Test Data; Air Movement and Control Association International, Inc.; 2007.

H. NEMA MG 1 - Motors and Generators; National Electrical Manufacturers Association; 2011.

I. SMACNA (DCS) - HVAC Duct Construction Standards; 2005.

1.03 PERFORMANCE REQUIREMENTS

A. Performance Ratings: Determined in accordance with AMCA 210 and bearing the AMCA Certified Rating Seal.

B. Sound Ratings: AMCA 301, tested to AMCA 300, and bear AMCA Certified Sound Rating Seal.

C. Fabrication: Conform to AMCA 99.

D. Performance Base: Sea level conditions.

E. Static and Dynamic Balance: Eliminate vibration or noise transmission to occupied areas.

1.04 SUBMITTALS

A. See Section 01 3000 - Administrative Requirements, for submittal procedures.

B. Product Data: Provide data on centrifugal fans and accessories including fan curves with specified operating point clearly plotted, power, RPM, sound power levels for both fan inlet and outlet at rated capacity, and electrical characteristics and connection requirements.

C. Shop Drawings: Indicate assembly of centrifugal fans and accessories including fan curves with specified operating point clearly plotted, sound power levels for both fan inlet and outlet at rated capacity, and electrical characteristics and connection requirements.

D. Manufacturer's Instructions: Include complete installation instructions.

E. Maintenance Data: Include instructions for lubrication, motor and drive replacement, spare parts list, and wiring diagrams.

F. Maintenance Materials: Furnish the following for The City's use in maintenance of project.
   1. See Section 01 6000 - Product Requirements, for additional provisions.
   2. Extra Fan Belts: One set for each individual fan.

1.05 DELIVERY, STORAGE, AND HANDLING

A. Protect motors, shafts, and bearings from weather and construction dust.

PART 2 PRODUCTS

2.01 MANUFACTURERS

A. Supply Fan array:
   1. Huntair 22" 4x4 array: www.huntair.com
   2. Greenheck: www.greenheck.com
   3. Or Approved Equal

B. ReturnFan
   1. Greenheck Model [33-QEP-1-I]: www.greenheck.com
   2. Huntair: huntair.com
   3. Or Approved Equal

END OF SECTION

SECTION 26 05 01
MINOR ELECTRICAL DEMOLITION

PART 1 GENERAL

1.01 SECTION INCLUDES

A. Electrical demolition.

PART 2 PRODUCTS

2.01 MATERIALS AND EQUIPMENT

A. Materials and equipment for patching and extending work: As specified in individual sections.

PART 3 EXECUTION

3.01 EXAMINATION

A. Verify field measurements and circuiting arrangements are as shown on Drawings.

B. Verify that abandoned wiring and equipment serve only abandoned facilities.

C. Demolition drawings are based on casual field observation and existing record documents.

D. Report discrepancies to Owner before disturbing existing installation.

E. Beginning of demolition means installer accepts existing conditions.

3.02 PREPARATION

A. Disconnect electrical systems in walls, floors, and ceilings to be removed.

B. Coordinate utility service outages with utility company.

C. Provide temporary wiring and connections to maintain existing systems in service during construction. When work must be performed on energized equipment or circuits, use personnel experienced in such operations.

D. Existing Electrical Service: Maintain existing system in service until new system is complete and ready for service. Disable system only to make switchovers and connections. Minimize outage duration.

1. Obtain permission from Owner at least 24 hours before partially or completely disabling system.
2. Make temporary connections to maintain service in areas adjacent to work area.

E. Existing Fire Alarm System: Maintain existing system in service until new system is accepted. Disable system only to make switchovers and connections. Minimize outage duration.

3.03 DEMOLITION AND EXTENSION OF EXISTING ELECTRICAL WORK

A. Remove, relocate, and extend existing installations to accommodate new construction.

B. Remove abandoned wiring to source of supply.

C. Remove exposed abandoned conduit, including abandoned conduit above accessible ceiling finishes. Cut conduit flush with walls and floors, and patch surfaces.

D. Disconnect abandoned outlets and remove devices. Remove abandoned outlets if conduit servicing them is abandoned and removed. Provide blank cover for abandoned outlets that are not removed.

E. Disconnect and remove electrical devices and equipment serving utilization equipment that has been removed.

F. Repair adjacent construction and finishes damaged during demolition and extension work.

G. Maintain access to existing electrical installations that remain active. Modify installation or provide access panel as appropriate.

H. Extend existing installations using materials and methods compatible with existing electrical installations, or as specified.

3.04 CLEANING AND REPAIR

A. Clean and repair existing materials and equipment that remain or that are to be reused.

B. Panelboards: Clean exposed surfaces and check tightness of electrical connections. Replace damaged circuit breakers and provide closure plates for vacant positions. Provide typed circuit directory showing revised circuiting arrangement.

C. Luminaires: Remove existing luminaires for cleaning. Use mild detergent to clean all exterior and interior surfaces; rinse with clean water and wipe dry. Replace lamps, ballasts and broken electrical parts.

END OF SECTION

SECTION 26 05 10
ELECTRICAL GENERAL PROVISIONS

PART 1 GENERAL

1.01 SECTION INCLUDES

A. Furnish all labor, materials, apparatus, tools, equipment, transportation, temporary construction and special or occasional services as required to make a complete working electrical installation, as shown on the drawings or described in these specifications.

1.02 REFERENCES

A. Reference to codes, standards, specifications and recommendations of technical societies, trade organizations and governmental agencies shall mean the latest edition of such publications adopted and published prior to submittal of the bid proposed. Such codes or standards shall be considered a part of this specification as though fully repeated herein.

B. When codes, standards, regulations, etc., allow work of lesser quality or extent than is specified under this Division, nothing in said codes shall be construed or inferred as reducing the quality, requirements or extent of the drawings and specifications.

C. California Code of Regulations (CCR) Title 24, Part 3, Basic Electrical Requirements, State Building Standards Electrical Code

D. National Fire Protection Association (NFPA).

E. Equipment and materials specified under this Division shall conform to the following standards where applicable:
   1. UL Underwriters' Laboratories
   2. ASTM American Society for Testing Materials
   3. CMB Certified Ballast Manufacturers
   4. IPCEA Insulated Power Cable Engineer Assoc.
   5. NEMA National Electrical Manufacturer's Assn.
   6. ANSI American National Standards Institute
   7. ETL Electrical Testing Laboratories

F. All base material shall be ASTM and/or ANSI standards.

G. All electrical apparatus furnished under this Section shall conform to National Electrical Manufacturers Association (NEMA) standards and the NEC and bear the Underwriters' Laboratories (UL) label where such label is applicable.

1.03 SUBMITTALS

A. See Division 1 for submittal procedures.

B. Where items are noted as "or equal" a product of equal design, construction and performance will be considered. Contractor must submit all pertinent test data, catalog cuts and product information required to substantiate that the product is in fact equal. Refer to Division 1, General Requirement for additional requirements. Only one substitution will be considered for each product specified.

C. Submittals shall consist of detailed shop drawings, specifications, "catalog cuts" and data sheets containing physical and dimensioned information, performance data, electrical characteristics, material used in fabrication, material finish and shall clearly indicate those optional accessories which are included and those which are excluded. Furnish one reproducible and 4 prints of each shop drawing.

1.04 CUTTING, PAINTING AND PATCHING

A. Structural members shall in no case be drilled, bored or notched in such a manner that will impair their structural value. Cutting of holes, if required, shall be done with core drill and only with the approval of the Engineer.

B. Cutting and digging shall be under the direct supervision of the General Contractor. Include as necessary for the work in this section.

C. The contractor shall be responsible for returning any surface from which he has removed equipment or devices to the condition and finish of the adjacent surfaces.

1.05 SUPERVISION

A. Contractor shall personally or through an authorized and competent representative constantly supervise the work from beginning to completion and, within reason, keep the same workmen and foreman on the project throughout the project duration.

1.06 PROTECTION

A. Keep conduits, junction boxes, and outlet boxes, and other openings closed to prevent entry of foreign matter: cover fixtures, equipment, and apparatus and protect against dirt, paint, water, chemical, or mechanical damage, before and during construction period. Restore to original condition any fixture, apparatus, or equipment damaged prior to final acceptance, including restoration of damaged shop coats of paint, before final acceptance. Protect bright finished surfaces and similar items until in service. No rust or damage will be permitted.

1.07 EXAMINATION OF SITE

A. The Contractor shall visit the site and determine the locale, working conditions, conflicting utilities, and the conditions in which the electrical work will take place. No allowances will be made subsequently for any costs which may be incurred because of any error or omission due to failure to examine the site and to notify the Engineer of any discrepancies between drawings and specifications and actual site conditions. Schedule visits at least 1 week in advance with Owner's Maintenance staff.

1.08 ENVIRONMENTAL REQUIREMENTS

A. After other work such as sanding, painting etc. has been completed, clean lighting fixtures, panelboards, switchboards, and other electrical equipment to remove dust, dirt, and grease, or other marks, and leave work in clean condition.

1.09 VOLTAGE CHECK

A. At completion of job, check voltage at several points of utilization on the system which has been installed under this contract. During test, energize all loads installed. Measure 3-Phase voltages and note percentage differences. Submit report to Engineer. Include copy in O&M Manual.

1.10 TESTS

A. Perform tests as specified to prove installation is in accordance with contract requirements. Perform tests in the presence of the Engineer and furnish test equipment, facilities, and technical personnel required to perform tests. Tests shall be conducted during the construction period and at completion to determine conformity with applicable codes and with these Specifications. Tests, in addition to specific system test described elsewhere, shall include:
   1. Insulation Resistance: All 600 volt insulation shall be tested at 1,000 volts D.C for one minute on all feeder and branch circuit conductors including the neutral, and make a typed record of all readings to be included in the maintenance instructions. The direct current amperes shall be recorded at start and at one minute. The value shall be declining and not more than one microampere.
   2. Circuit Continuity: Test all feeder and branch circuits for continuity. Test all neutrals for improper ground.

B. Equipment Operations: Test motors for correct operation and rotation.

C. Product Failure: Any products which fail during the tests or are ruled unsatisfactory by the Engineer shall be replaced, repaired, or corrected as prescribed by the Engineer at the expense of the Contractor. Tests shall be performed after repairs, replacements, or corrections until satisfactory performance is demonstrated.

D. Miscellaneous: Include all test results in the maintenance manual. Cost, if any, for all tests shall be paid by the Contractor.

1.11 DRAWINGS

A. Layout: General layout shown on the drawing shall be followed except where other work may conflict with the drawings.

B. Accuracy:
   1. Drawings for the work under this section are diagrammatic.
   2. Contractor shall verify lines, levels, and dimensions shown on the drawings and shall be responsible for the accuracy of the setting out of work and for its strict conformance with existing conditions at the site.
   3. Contractor shall insure reconnection of existing equipment and circuits affected by contract demolition whether or not reconnection is specifically shown on the contract documents.

1.12 PROJECT RECORD DRAWINGS

A. Refer to General Conditions for contractual requirements. Provide project record drawings as required by the General Provisions of the specifications and as required herein. Such drawings shall fully represent installed conditions including actual locations of outlets, true panelboard connections following phase balancing routines, correct conduit and wire sizing as well as routing, revised fixture schedule listing the manufacturer and products actually installed and revised panel schedule. All changes to drawings shall be made by qualified draftspersons to match existing linework and lettering as close as possible. When all the changes have been made to the trade drawings, contractor shall produce one (1) full size (E-Size) updated set of trade drawing(s) utilizing AutoCad 2008 or newer and supply one (1) set of Compact Discs (CD's) reflecting same.

1.13 MAINTENANCE AND OPERATING INSTRUCTIONS

A. Furnish to the Engineer four (4) hard back 3-ring binders containing all bulletins, operating and maintenance instructions and part lists and other pertinent information for each and every piece of equipment furnished under this specification. Include service telephone numbers. Each binder shall be indexed into sections and labeled for easy reference. Bulletins containing more information than the equipment concerned shall be properly stripped and assembled.

B. At the time of completion, a period of not less than eight hours shall be allotted by the Contractor for instruction of building operating and maintenance personnel in the use of all systems. All personnel shall be instructed at one time, the Contractor making all necessary arrangements with manufacturer's representative. The equipment manufacturer shall be requested to provide product literature and application guides for the user's reference. Costs, if any for the above services shall be paid by the Contractor.

1.14 WARRANTIES

A. Furnish to the Engineer four (4) hard back 3-ring binders containing all warranties of every piece of equipment furnished under this specification. Include terms and limitations of warranties, contact names, addresses, and telephone numbers of manufacturer. Each binder shall be indexed into sections and labeled for easy reference for each equipment warranty.

1.15 EXTRA MATERIALS

A. See Division 1 - Product Requirements, for additional provisions.

B. All special tools for proper operation and maintenance of the equipment provided under this Section shall be delivered to the District's representative

PART 2 PRODUCTS - NOT USED

PART 3 EXECUTION

3.01 WORKMANSHIP

A. Preparation, handling, and installation shall be in accordance with manufacturer's written instructions and technical data particular to the product specified and/or accepted equal except as otherwise specified. Coordinate work and cooperate with others in furnishing and placing

this work. Work to reviewed shop drawings for work done by others and to field measurements as necessary to properly fit the work.

B. Conform to the National Electrical Contractor's Association "Standard of Installation" for general installation practice.

3.02 INSTALLATION

A. Install in accordance with manufacturer's instructions.

END OF SECTION

SECTION 26 05 12
BASIC MATERIAL AND METHODS

PART 1 GENERAL

1.01 SECTION INCLUDES

A. Conduit, raceways and fittings.
B. Wires and Cables for 600 Volts and less.
C. Wire connections.
D. Wire devices.
E. Outlet boxes.
F. Pull and junction boxes.
G. Disconnect Switches.
H. Fuses.
I. Supporting Devices.
J. Identifying Devices.
K. Grounding and Bonding

PART 2 PRODUCTS

2.01 CONDUIT, RACEWAYS AND FITTINGS

A. Rigid Steel Conduit
   1. Rigid steel conduit shall be full weight, pipe size, finished inside and out by hot-dip galvanizing after fabrication, and shall conform with ANSI C80.1 and UL.
   2. Couplings shall be electroplated steel.
   3. Insulating Bushings: Threaded polypropylene or thermo-setting phenolic rated 150°C minimum.
   4. Insulated grounding Bushings: Threaded cast malleable iron body with insulated throat and steel "lay-in" ground lug with compression screw.
   5. Insulated Metallic Bushings: Threaded cast malleable iron body with plastic insulated throat rated 150°C.
   6. Running threads are not acceptable.

B. Electrical Metallic Tubing (EMT):
   1. Conduit: Conduit shall be formed of cold rolled strip steel, and shall comply with ANSI C80.3 and UL requirements.
   2. Couplings: Electroplated steel, UL listed rain and concrete tight through 1-1/4" trade size. All EMT fittings shall be compression type.
   3. Connectors: Steel, gland compression type with insulated plastic throat, 150°C temperature rated. All EMT fittings shall be compression type.

C. Liquid Tight Flexible Metal Conduit:
   1. Conduit: Conduit shall be fabricated in continuous lengths from galvanized steel strip, spirally wound. Flexible conduit, except where installed in concealed dry locations, shall be liquid tight with plastic jacket extruded over the outer zinc coating. No aluminum substitute will be accepted.
   2. Fittings: Connectors shall be the screw clamp on screw-in (Jake) variety with cast malleable iron bodies and threaded male hubs with insulated throat or insulated bushings. Set screw type connectors are not acceptable. Liquid tight fittings shall be of cadmium plated cast malleable iron, with insulated throat.

D. Rigid Non-Metallic Conduit:
   1. Conduit and fittings shall be homogeneous plastic material free from visible cracks, holes or foreign inclusions. The conduit bore shall be smooth and free of blisters, nicks or other imperfections which could damage conductors or cables.

2. Materials: Polyvinyl Chloride (PVC) schedule 40. Material shall comply with NEMA TC-2 for conduit and NEMA TC-3 for fittings.

2.02 WIRING AND CABLES

A. Acceptable manufacturers: Southwire, or approved equal.

B. Conductor material: All wire and cable shall be insulated, stranded copper conductors. Soft drawn annealed copper wire 98% conductivity, bearing the UL label.

C. Minimum conductor size: AWG No. 12 for all power and lighting branch circuits. AWG No. 14 for all signal and control circuits.

D. Color Coding: System conductors shall be identified as to voltage and phase connections by means of color impregnated insulation or approved colored marking tape as follows:

E. For 120/240 volt, single phase, 3 wire system.
   1. Phase A - Black
   2. Phase B - Red
   3. Phase C - Orange for High Leg (208v to neutral)
   4. Neutral - White
   5. Ground - Green

F. For 120/208 volt, 3 phase, 4 wire systems.
   1. Phase A - Black
   2. Phase B - Red
   3. Phase C - Blue
   4. Neutral - White
   5. Ground - Green

G. for 277/480 Volt, 3 phase, 4 wire system
   1. Phase A - Brown
   2. Phase B - Orange
   3. Phase C - Yellow
   4. Neutral - Grey
   5. Ground - Green

H. Secondary Wire and Cable, 0 to 600 Volts;
   1. NEC Type THWN, or Type XHHW for feeders and branch circuits in wet or dry locations. NEC type THHN for branch circuits in dry locations.

2.03 WIRE CONNECTION

A. Wire Joints: Wires in sizes from #18 to #8 AWG, stranded conductor, with insulation rated 105 degrees C. or less shall be joined with electrical spring connectors of three part construction incorporating a non-restricted, zinc coated steel spring enclosed in a steel shell with an outer jacket of vinyl plastic with a flexible insulating skirt.

B. Mechanical Compression Connectors and Taps: Stranded conductors from #6 AWG to 750 Kcmil shall be joined or tapped using bolted pressure connectors having cast bronze compression bolts. Fittings shall be wide range-taking and designed to facilitate the making of parallel taps, tees, crosses or end-to-end connections. Split-bolt connectors will not be acceptable.

C. Fixture Connections: Splice fixture wire to circuit wiring with solderless connectors as specified above in paragraph A.

D. Terminating Lugs: Conductors from size No. 6 AWG to 750 Kcmil, copper, shall be terminated using tin plated hydraulically operated crimping tools and dies as stipulated by the lug manufacturer. Lugs shall be 3M "Scotchlok" series 30000, Burndy Type Ya-L series, or equal.

E. Splicing and Insulating Tape (600 volts and below): General purpose electrical tape shall be suitable for temperatures from minus 18 degrees C to 105 degrees C, shall be black, ultraviolet proof, self-extinguishing, 7 mil thick vinyl with a dielectric strength of 10,000 volts. Apply 4 layers half-lap with 2" over-lay on each conductor.

F. Insulating Putty (600 volts and below): Pads or rolls of non-corrosive, self-fusing, one eight inch thick rubber putty with PVC backing sheet. Putty shall be suitable for temperatures from minus 17.8 degrees C to 37.8 degrees C and shall have a dielectric strength of 570 volts/mil minimum.

G. Insulating Resin: Two Part liquid epoxy resin with resin and catalyst in pre measured, sealed mixing pouch. Resin shall have a set up time of approximately 30 minutes at 21.1 degrees C, and shall have thermal and dielectric properties equal to the insulation properties of the cables immersed in the resin.

H. Terminal Strip Connectors: Terminate wire in locking tongue style, pressure type, solderless lug where applicable.

2.04 WIRING DEVICES

A. Switches: Specification grade, flush mounting, quiet operating AC type, with toggle operator, heat resistant plastic housing and self grounding metal strap. Silver or silver alloy contact. Rated 20A at 120-277V and capable of full capacity on tungsten or fluorescent lamp load. Design for up to #10 wire. Use single pole, double pole, three-way, four-way, lighted, pilot, or keyed type, as indicated on drawings or required. Provide white color unless otherwise noted. Manufacturer: Leviton, Arrow Hart, or Hubbell.

B. Receptacles: Specification grade, flush mounting receptacles with nylon face. High grade brass allow triple wipe contacts. Provide 2 pole, 3 wire grounding type with a green colored brass hexagonal equipment grounding screw. Grounding shall be rivetless, single piece brass with no mechanical connections in the primary path between point of ground wire termination and ground blades. Use 20A rated receptacles, white in color, unless otherwise noted. Manufacturer: Leviton, Arrow Hart, or Hubbell.
   1. Isolated Ground - Provide separate path to ground, with orange faceplate or triangle to indicated isolated ground
   2. GFCI - Equipped with diagnostic indicator for miswiring.
   3. Weatherproof - GFCI type, outdoor rated, with metal lockable while in use cover

C. Faceplates: Provide nylon cover faceplates for wall receptacles, outlets, and switches. Include thermal mounting screws that match plate and device color. Manufacturer: Leviton, Arrow Hart, or Hubbell.

2.05 OUTLET BOXES

A. Standard outlet boxes: Galvanized, die formed or drawn steel, knock-out type of size and configuration best suited to the application indicated on the plans. Minimum box size, 4 inch square by 1-1/2 inch deep, indoor use. FS cast boxes are required for outdoor use.

B. Cast Metal Outlet Boxes: FS/FD cast boxes are required for outdoor use. Malleable iron alloy with threaded hubs and mounting lugs as required. Boxes shall be furnished with cast cover plates of the same material as the box and neoprene cover gaskets. Thomas and Betts, Crouse-Hinds, Appleton or equal.

C. Conduit Outlet Bodies: Cadmium plated, cast iron alloy. Obround conduit outlet bodies with threaded conduit hubs and neoprene gasketed, cast iron covers. Outlet bodies shall be used to facilitate pulling of conductors or to make changes in conduit direction only. Splices are not permitted in conduit outlet bodies. Thomas and Betts, Crouse Hinds Form 8 Condulets, Appleton form 35 Unilets, or equal.

2.06 PULL AND JUNCTION

A. Sheet Metal Boxes: Use standard outlet or concrete ring boxes wherever possible; otherwise use minimum 15 gauge get metal, NEMA 1 boxes, sized to code requirements with covers secured by cadmium plated machine screws located 6 inches on centers. Circle AW Products, Hoffman Engineering Co., or equal.

B. Cast Metal Boxes: Use standard cast malleable iron outlet or device boxes wherever possible; otherwise use cadmium plated, cast malleable iron junction boxes with bolt-on, interchangeable conduit hub plates with neoprene gaskets. Appleton FS/FD series; Crouse Hinds FS/FD series, or equal.

2.07 DISCONNECT SWITCHES

A. All disconnect switches shall be heavy-duty type and have the number of poles, voltage rating, and horsepower rating as required by the motor or equipment. Disconnect switches shall be in enclosures to suit conditions, NEMA 3R for outdoor and NEMA 1 for indoor. Disconnect switches shall be fused unless otherwise noted on the drawings. As manufactured by: Square D - Class 3110, ITE Seimens, or equal.

2.08 FUSES

A. Dual Element, Time Delay, UL Class RK5. Rejection type. Size and Voltage as indicated on equipment. Bussman, Little Fuse, or approved equal.

2.09 ELECTRICAL SUPPORTING DEVICES

A. Concrete Fasteners: Hilti Kwik Bolt TZ or equal, self drilling expansion type concrete anchor.

B. Conduit Straps: Hot-dip galvanized, cast malleable iron, two hole type strap with cast clamp-backs and spacers as required. OZ/Gedney, Thomas & Betts, or equal.

C. Construction Channel: 1-1/2 inch by 1-1/2 inch 12 gauge galvanized steel channel with 17/32 inch diameter bolt holes, 1-1/2 inch on center, in the base of the channel. Kindorf 905 series, Unistrut P-1000-HS or equal.

D. Cable Ties and Clamps: Thomas and Betts Co. "Ty-Raps" Panduit "Pan-Ty" or equal one piece, nylon, reusable type lashing ties.

E. Fasteners (General): Wood screws for fastening to wood. Machine screws for fastening to steel. Toggle bolts for fastening to hollow concrete block, gypsum board, or plaster walls. Expansion anchors for attachments to pre-poured concrete.

2.10 IDENTIFYING DEVICES

A. Nameplates: Type NP: Engraved black bakelite, 1 inch by 3-1/2 inch, 1/8 inch high white letters, machine screw retained. For permanent identification of all switchboards, panelboards, circuit breakers in separate enclosures, motor starters, relays, time switches, disconnect switches and other cabinet-enclosed apparatus including terminal cabinets or match existing as closely as possible.

B. Legend Plates: Type LP: Die-stamped metal legend plate with mounting hole and positioning key for attachment to panel mounted operators' devices. Engraved paint-filled characters as specified.

C. Wire & Terminal Markers: Self-adhering, pre-printed vinyl with self-laminating wrap around strip. Markers shall be legible after termination. Brady B191 series, Thomas & Betts WSL series or equal.

D. Conductor Phase Markers: Thomas & Betts WCPHAS series or similar in addition to colored marking as specified under this section of the specifications.

2.11 GROUNDING AND BONDING

A. Ground Rods
   1. Manufacturer: Blackburn, Erico, or approved Equal
   2. Size: 3/4" x 10' Ground Rods

B. Grounding Electrode Conductor, 2/0 for foundation foots, and per NEC.

C. Grounding Well - Christy Box, G5 Traffic Valve Box.

PART 3 EXECUTION

3.01 CONDUIT AND RACEWAY APPLICATIONS

A. Rigid Steel Conduit: Use rigid steel conduit for the following locations or conditions:
   1. All exterior applications
   2. All conduits larger than 2" trade diameter.
   3. All conduits indoor below eight (8) feet above finished floor.

B. Electrical Metallic Tubing (EMT): EMT is allowed for the following conditions:

1. Interior only and above eight (8) feet from finished floor.
2. Interior only and when entering a panel from above.

C. Liquidtight Flexible Metallic Conduit: Use Liquidtight for the following conditions:
1. In damp and wet locations for connections to motors, transformers, vibrating equipment and machinery.
2. Connections to all pump motors, flow switches, and similar devices.

D. Rigid Non-Metallic Conduit, Polyvinyl Chloride (PVC) Schedule 40:
1. Underground installation.

3.02 CONDUIT INSTALLATION

A. General
1. All conduit runs shown on the plans are sized based on the use of rigid steel conduit and THWN copper conductors. If conductor type is changed the contractor shall be responsible for resizing conduits to meet code. In no case is conduit to be sized smaller than 3/4" trade diameter.
2. Low voltage wiring shall be installed in conduit, minimum 3/4" trade diameter.
3. Conduits shall be tightly covered and well protected during construction using metallic bushings and bushing "pennies" to seal open ends.
4. In making joints in rigid steel conduit, ream conduit smooth after cutting and threading.
5. Clean any conduit in which moisture or any foreign matter has collected before pulling in conductors. Paint all field threaded joints to prevent corrosion.
6. In all empty conduits or ducts, install an 1100 pound tensile strength polyethylene pulling rope.
7. Conduit systems shall be electrically continuous throughout. Install code size, uninsulated, copper grounding conductors in all conduit runs, grounding conductor shall be bonded to conduit, equipment frames and properly grounded.

B. Layout:
1. All new conduits shall be concealed. Any field conditions that does not allow concealment of conduits shall be reviewed with the Engineer prior to rough-in.
2. Locations of conduit runs shall be planned in advance of the installation and coordinated with concrete work, plumbing and framing.
3. Where practical install conduits in groups in parallel vertical or horizontal runs and at elevations that avoid unnecessary off-sets.
4. Low voltage conduit shall be grouped separately and labelled every 10 ft interval as to system (i.e. fire, control, etc)
5. Exposed conduit shall be run parallel or at right angles to the centerlines of the columns and beams.
6. Conduits shall not be placed closer than 12 inches from a parallel hot water or steam line or three inches from such lines crossing perpendicular to the runs.
7. In long runs of conduit, provide sufficient pull boxes per NEC inside buildings to facilitate pulling wires and cables. Support pull boxes from structure independent of conduit supports. These pull boxes are not shown on the plans.

C. Supports:
1. All raceway systems shall be secured to building structures using specified fasteners, clamps and hangers spaced according to Code.
2. Support single runs of conduit using two hole pipe straps. Where run horizontally on walls in damp or wet locations, install "clamp blocks" to space conduit off the surface.
3. Multiple conduit runs shall be supported using "trapeze" hangers fabricated from 3/8 inch diameter, threaded steel rods secured to building structures. Fasten conduit to construction channel with standard two hole pipe clamps. Provide lateral seismic bracing for hangers.
4. Installation
   a. Locate and install anchors, fasteners, and supports in accordance with NECA "Standard of Installation".

1) Do not fasten supports to pipes, ducts, mechanical equipment, or conduit.
2) Do not drill or cut structural members.

b. Rigidly weld support members or use hexagon-head bolts to present neat appearance with adequate strength and rigidity. Use spring lock washers under all nuts.
c. Install surface-mounted cabinets and panelboards with minimum of four anchors.
d. In wet and damp locations use steel channel supports to stand cabinets and panelboards 1 inch off wall.
e. Use sheet metal channel to bridge studs above and below cabinets and panelboards recessed in hollow partitions.

D. Terminations and Joints:
1. Raceways shall be joined using specified couplings or transition couplings where dissimilar raceway systems are joined.
2. Rigid conduit connection to enclosures shall be made by Myers type grounding hubs only. EMT connections to enclosures shall be made with compression connector with grounding lock-nuts or bushings.
3. Conduit terminations exposed at weatherproof enclosures and cast outlet boxes shall be made watertight using appropriate connectors and hubs.
4. Install expansion couplings where any conduit crosses a building separation or expansion joint.
5. Install cable sealing bushings on all conduits originating outside the building walls and terminating in switchgear, cabinets or gutters inside the building. Install cable sealing bushings or caulk conduit terminations in all grade level or below grade exterior pull, junction or outlet boxes.

E. Penetrations:
1. Furnish and install metal sleeves for all exposed interior conduit runs passing through concrete floors or walls. Following conduit installation, seal all penetrations using non-iron bearing, chloride free, non-shrinking, dry-pack, grouting compound.
2. Install specified watertight conduit entrance seals and membrane clamps at all below grade wall and floor penetrations. Conduits penetrating exterior building walls and building floor slab shall be insulated rigid steel.
3. Conduits penetrating rated walls, floors, etc. shall be fireproofed.

3.03 CABLE AND WIRE INSTALLATION

A. Examination
1. Verify that interior of building has been protected from weather.
2. Verify that mechanical work likely to damage wire and cable has been completed.
3. Verify that raceway installation is complete and supported.
4. Verify that field measurements are as indicated.

B. Preparation
1. In existing conduits that will be reused, pull out existing conductors.
2. Completely and thoroughly swab raceway before installing wire.
3. Use 50/50 solution of Simple Green. Use CO2 to blow water and soap into conduit - let soak to break up dried out pulling compounds, then pull conductors. Pull one conductor at a time if will not pull all out together.

C. General:
1. Conductors shall not be in conduit until all work of any nature that may cause injury is completed. Care should be taken in pulling conductors that insulation is not damaged. U.L. approved non-petroleum base and insulating type pulling compound shall be used as needed.
2. All cables shall be installed and tested in accordance with manufacturer's requirements and warranty.
3. Block and tackle, power driven winch or other mechanical means shall not be used in pulling conductors of size smaller than AWG # 1.

D. Splicing and Terminating:
   1. All aspects of splicing and terminating shall be in accordance with cable manufacturer's published procedures.
   2. Make up all splices in outlet boxes with connectors as specified herein with separate tails of correct color to be made up to splice. Provide at least six (6) inches of tails packed in box after splice is made up.
   3. All wire and cable in panels, control centers and equipment enclosures shall be bundled and clamped.
   4. Encapsulate splices in exterior outlet, junction and pull boxes using insulating resin kits. All splices for exterior equipment in pump rooms shall be made up watertight.
   5. Insulate mechanical compression taps AWG # 1/0 and larger using pre-molded, snap-on insulating boots or specified conformable insulating putty overwrapped with two half-lapped layers of insulating tape.

E. Identification:
   1. Securely tag all branch circuits, noting the purpose of each. Mark conductors with vinyl wrap-around markers. Where more than two conductors run through a single outlet, mark each circuit with the corresponding circuit number at the panelboard.
   2. Color code conductors size #6 and larger using specified phase color markers and identification tags.
   3. All terminal strips are to have each individual terminal identified with specified vinyl markers.
   4. All identification shall be legible and readable after completion of installation.
   5. Provide labeling for all switches and receptacle outlets. Self-adhering machine clear tape with black letters.

3.04 INSTALLATION:

A. Route wire and cable as required to meet project conditions.
   1. Wire and cable routing indicated is approximate unless dimensioned.
   2. Where wire and cable destination is indicated and routing is not shown, determine exact routing and lengths required.
   3. Include wire and cable of lengths required to install connected devices within 10 ft of location shown.

B. Install wire and cable in accordance with the NECA "Standard of Installation."

C. Use wiring methods indicated.

D. Pull all conductors into raceway at same time.

E. Use suitable wire pulling lubricant for building wire 4 AWG and larger.

F. Protect exposed cable from damage.

G. Support cables above accessible ceiling, using spring metal clips or metal cable ties to support cables from structure or ceiling suspension system. Do not rest cable on ceiling panels.

H. Use suitable cable fittings and connectors.

I. Neatly train and lace wiring inside boxes, equipment, and panelboards.

J. Clean conductor surfaces before installing lugs and connectors.

K. Make splices, taps, and terminations to carry full ampacity of conductors with no perceptible temperature rise.

L. Terminate aluminum conductors with tin-plated aluminum-bodied compression connectors only. Fill with anti- oxidant compound before installing conductor.

M. Use suitable reducing connectors or mechanical connector adaptors for connecting aluminum conductors to copper conductors.

N. Use split bolt connectors for copper conductor splices and taps, 6 AWG and larger. Tape uninsulated conductors and connector with electrical tape to 150 percent of insulation rating of conductor.

O. Use solderless pressure connectors with insulating covers for copper conductor splices and taps, 8 AWG and smaller.

P. Use insulated spring wire connectors with plastic caps for copper conductor splices and taps, 10 AWG and smaller.

Q. Trench and backfill for direct burial cable installation as specified in Underground Structure Section. Install warning tape along entire length of direct burial cable.

R. Identify and color code wire and cable. Identify each conductor with its circuit number or other designation indicated.

3.05 ELECTRICAL CONNECTIONS

A. Make electrical connections in accordance with equipment manufacturer's instructions.

B. Make conduit connections to equipment using flexible conduit. Use liquidtight flexible conduit with watertight connectors in damp or wet locations.

C. Connect heat producing equipment using wire and cable with insulation suitable for temperatures encountered.

D. Provide receptacle outlet to accommodate connection with attachment plug.

E. Provide cord and cap where field-supplied attachment plug is required.

F. Install suitable strain-relief clamps and fittings for cord connections at outlet boxes and equipment connection boxes.

G. Install disconnect switches, controllers, control stations, and control devices to complete equipment wiring requirements.

H. Install terminal block jumpers to complete equipment wiring requirements.

I. Install interconnecting conduit and wiring between devices and equipment to complete equipment wiring requirements.

3.06 INSTALLATION OF BOXES

A. General:
   1. Leave no un-used openings in any box. Install close-up plugs as required to seal openings.
   2. Exposed outlet boxes and boxes in damp or wet locations shall be cast metal with gasketed cast metal cover plates.

B. Box Layout:
   1. Outlet boxes shall be installed at the locations and elevations shown on the drawings or specified herein. Make adjustments to locations as required by structural conditions and to suit coordination requirements of other trades.
   2. Install junction or pullboxes where required to limit bends in conduit runs to not more than 360 degrees or where pulling tension achieved would exceed the maximum allowable for the cable to be installed. Consult wire and cable manufacturer.

3.07 INSTALLATION OF WIRING DEVICES

A. General
   1. Install all devices flushmounted unless otherwise noted on the drawings. Comply with layout drawings for general locations. Consult Engineer or Owner's Representative for locations that have conflict with other devices or manner not suitable for installation. Avoid placing devices behind open doors.
   2. Align devices horizontally and vertically. Device plates shall be aligned vertically with tolerance of 1/16". All four edges of device plates shall be in contact with the wall surface.
   3. Mounting height as indicated on the drawings and according to ADA requirements.
   4. Install device plates on all outlet boxes. Provide blank plates for all empty, spare, and boxes for future use.
   5. Securely fasten devices into boxes and attach appropriate cover plates.

6. Caulk around edges or outdoor device plates and boxes when rough wall surfaces prevent raintight seal. Use caulking materials approved by Engineer. Fireproof around opening of devices located or penetrating firerated construction assemblies.
7. Fireproof around opening of devices located or penetrating firerated construction assemblies.

B. Switches
1. Where switches are indicated to be installed near doors, corner walls, etc. mount not less than 2 inches and not more than 18" from trim. Verify exact location with Architect or Engineer prior to rough-in.
2. Coordinate the location of switches to insure locations at the strike side of doors.
3. Furnish and install engraved legend of each switch that controls exhaust fans, motors, equipment systems, etc. not located within sight of the controlling switch.
4. Ganging of Switches - provide barriers for switches of difference phases and voltages. Otherwise switches shall be gauged in one faceplate.

C. Receptacles
1. Mount receptacles vertically with U-shaped ground position on bottom.
2. Do not combine GFCI protected circuits with other circuits in the same raceway. Limit number of GFI protect circuits in any one raceway to a maximum of one (1) circuit.

D. Identification
1. Label all outlets and switches. Mark each wiring device where circuits and panel supply is derived from.
2. All identification shall be legible and readable after completion of installation

3.08 INSTALLATION OF FUSES AND DISCONNECT SWITCHES

A. Fuses shall be installed where noted on plans. Sizes are based on design data provided by equipment mfg. Listed or labeled equipment must be in accordance with instructions included in the listing or labeling. Be sure to observe maximum branch circuit fuse size labels.

B. Disconnect switches shall be mounted on the equipment, where possible. Coordinate with mechanical contractor to ensure switches are not mounted on a removable access panel.

C. Label each disconnect fuse with equipment tag as indicated in the single line diagram, or as directed.

3.09 ELECTRICAL EQUIPMENT GROUNDING

A. Ground non-current carrying metal parts of electrical equipment enclosures, frames, conductor raceways or cable trays to provide a low impedance path for line-to-ground fault current and to bond all non-current carrying metal parts together. Install a ground conductor in each raceway system in addition to conductors shown. Equipment ground conductor shall be electrically and mechanically continuous from the electrical circuit source to the equipment to be grounded. Size ground conductors per NEC 250 unless larger conductors are shown on the drawings.

B. Grounding conductors shall be identified with green insulation, except where a bare ground conductor is specified. Where green insulation is not available, on larger sizes, black insulation shall be used and suitably identified with green tape at each junction box or device enclosure.

C. Install metal raceway couplings, fittings and terminations secure and tight to insure good ground continuity. Provide insulated grounding bushing and bonding jumper where metal raceway is not directly attached to equipment metal enclosure and at concentric knock-outs.

D. Motors shall be connected to equipment ground conductors with a conduit grounding bushing and with a bolted solderless lug connection on the metal frame.

E. Conduit terminating in concentric knockouts at panelboards, cabinets and gutters shall have insulated grounding bushings and bonding jumpers installed interconnecting all such conduits and the panelboard cabinet, gutter, etc.

F. Performance:
1. Measure the resistance to ground of each ground rod before connection to the other ground rods. The resistance shall not exceed 25 ohms.

a. A single electrode which does not have a resistance to ground of 25 ohms or less shall be augmented by additional electrode(s).

2. Measure the resistance to ground of the total ground system with all connections completed. The resistance shall not exceed 2 ohms for primary services or 5 ohms for secondary services.
3. Tests of the resistance to ground shall be made using either the three point method or the fall-of-potential method.
4. Perform a continuity check from equipment ground bus bars and ground lugs to the ground system.

3.10 BONDING

A. Bonding shall be provided to assure electrical continuity and the capacity to conduct safely any fault current likely to be imposed.

B. Bonding shall be in accordance with NEC Article 250, Part V.

3.11 INSTALLATION

A. Install in accordance with manufacturer's instructions.

END OF SECTION

SECTION 26 05 29
HANGERS AND SUPPORTS FOR ELECTRICAL SYSTEMS

PART 1 GENERAL

1.01 SECTION INCLUDES

A. Support and attachment components for equipment, conduit, cable, boxes, and other electrical work.

PART 2 PRODUCTS

2.01 SUPPORT AND ATTACHMENT COMPONENTS

A. General Requirements:
   1. Provide all required hangers, supports, anchors, fasteners, fittings, accessories, and hardware as necessary for the complete installation of electrical work.
   2. Provide products listed, classified, and labeled by Underwriter's Laboratories Inc. (UL) or testing firm acceptable to authority having jurisdiction as suitable for the purpose indicated, where applicable.
   3. Where support and attachment component types and sizes are not indicated, select in accordance with manufacturer's application criteria as required for the load to be supported with a minimum safety factor of _____. Include consideration for vibration, equipment operation, and shock loads where applicable.
   4. Do not use products for applications other than as permitted by NFPA 70 and product listing.
   5. Steel Components: Use corrosion resistant materials suitable for the environment where installed.
      a. Zinc-Plated Steel: Electroplated in accordance with ASTM B633.
      b. Galvanized Steel: Hot-dip galvanized after fabrication in accordance with ASTM A123/A123M or ASTM A153/A153M.

B. Conduit and Cable Supports: Straps, clamps, etc. suitable for the conduit or cable to be supported.
   1. Conduit Straps: One-hole or two-hole type; steel or malleable iron.
   2. Conduit Clamps: Bolted type unless otherwise indicated.

C. Outlet Box Supports: Hangers, brackets, etc. suitable for the boxes to be supported.

D. Metal Channel (Strut) Framing Systems: Factory-fabricated continuous-slot metal channel (strut) and associated fittings, accessories, and hardware required for field-assembly of supports.
   1. Comply with MFMA-4.

E. Hanger Rods: Threaded zinc-plated steel unless otherwise indicated.

F. Anchors and Fasteners:
   1. Unless otherwise indicated and where not otherwise restricted, use the anchor and fastener types indicated for the specified applications.

2.02 MANUFACTURERS

A. Cooper B-Line, Eaton Corporation.

B. Threaded Rod Company: www.threadedrod.com.
   1. Do not use powder-actuated anchors, spring clips, or beam clamps.
   2. Obtain permission from Engineer before using powder-actuated anchors.
   3. Concrete Structural Elements: Use precast inserts, expansion anchors, powder-actuated anchors, or preset inserts.
   4. Concrete Surfaces: Use self-drilling anchors or expansion anchors.
   5. Hollow Masonry, Plaster, and Gypsum Board Partitions: Use toggle bolts or hollow wall fasteners.
   6. Solid Masonry Walls: Use expansion anchors or preset inserts.
   7. Sheet Metal: Use sheet metal screws.

C. Formed Steel Channel:
   1. Product: _____ manufactured by _____.
   2. Substitutions: See Section 01 60 00 - Product Requirements.
   3. Product: _____ manufactured by _____.
   4. Substitutions: See Section 01 60 00 - Product Requirements.
   5. Product: _____ manufactured by _____.

PART 3 EXECUTION

3.01 INSTALLATION

A. Install products in accordance with manufacturer's instructions.

B. Install support and attachment components in a neat and workmanlike manner in accordance with NECA 1.

C. Provide independent support from building structure. Do not provide support from piping, ductwork, or other systems.

D. Unless specifically indicated or approved by Engineer, do not provide support from suspended ceiling support system or ceiling grid.

E. Unless specifically indicated or approved by Engineer, do not provide support from roof deck.

F. Do not penetrate or otherwise notch or cut structural members without approval of Structural Engineer.

G. Equipment Support and Attachment:
   1. Use metal fabricated supports or supports assembled from metal channel (strut) to support equipment as required.
   2. Use metal channel (strut) secured to studs to support equipment surface-mounted on hollow stud walls when wall strength is not sufficient to resist pull-out.
   3. Use metal channel (strut) to support surface-mounted equipment in wet or damp locations to provide space between equipment and mounting surface.
   4. Securely fasten floor-mounted equipment. Do not install equipment such that it relies on its own weight for support.

H. Secure fasteners according to manufacturer's recommended torque settings.

I. Remove temporary supports.

END OF SECTION

SECTION 26 08 02
ELECTRICAL ACCEPTANCE TESTING

PART 1 - GENERAL

1.01 OVERVIEW

A. The purpose of these specifications is to assure that all tested electrical equipment and systems are operational and within applicable standards and manufacturer's tolerances and that the equipment and systems are installed in accordance with design specifications.

B. The work specified in these specifications may involve hazardous voltages, materials, operations, and equipment. These specifications do not purport to address all of the safety problems associated with their use. It is the responsibility of the independent testing agency to review all applicable regulatory limitations prior to the use of these specifications.

C. Perform the visual inspections, manual operations and tests on systems and equipment as described in Part 3, "Execution".

D. Tests shall be performed and documented by an independent testing agency.

E. Perform these tests in addition to other electrical tests delineated in other Sections.

1.02 REFERENCES

A. All inspections and field tests shall be in accordance with the latest edition of the following codes, standards, and specifications except as provided otherwise herein.
   1. American National Standards Institute - ANSI
   2. American Society for Testing and Materials - ASTM
   3. Institute of Electrical and Electronic Engineers - IEEE
   4. Insulated Cable Engineers Association - ICEA
   5. InterNational Electrical Testing Association - NETA
   6. National Electrical Manufacturer's Association - NEMA
   7. National Fire Protection Association - NFPA
   8. Occupational Safety and Health Administration - OSHA
   9. State and local codes and ordinances
   10. Underwriters Laboratories, Inc. - UL

1.03 SUBMITTAL

A. The testing organization shall submit appropriate documentation to demonstrate that it satisfactorily complies with the following. An organization having a "Full Membership" classification issued by the InterNational Electrical Testing Association meets this criteria.
   1. The testing organization shall be an independent, third party, testing organization which can function as an unbiased testing authority, professionally independent of the manufacturers, suppliers, and installers of equipment or systems evaluated by the testing organization.
   2. The testing organization shall be regularly engaged in the testing of electrical equipment devices, installations, and systems.

B. The testing organization shall utilize technicians who are regularly employed for testing services.

C. Each on-site crew leader shall hold a current registered certification in electrical testing applicable to each type of apparatus to be inspected or tested. The certification in electrical testing shall be issued by an independent, nationally-recognized, technician certification agency. The following entities shall qualify as independent, nationally-recognized, technician certification agencies:
   1. InterNational Electrical Testing Association (NETA)
   2. Accepted certifications:
   3. Certified Technician/Level III
   4. Certified Senior Technician/Level IV

1.04 TEST REPORTS

A. Provide written test reports, signed and dated, for all tests prior to acceptance of the tested equipment by the Owner. Test reports on megger, dielectric absorption and high potential tests shall include the ambient temperature and relative humidity existing at the time of the tests.

PART 2 - PART 2 -PRODUCTS (NOT APPLICABLE)

PART 3 - EXECUTION

3.01 VISUAL INSPECTIONS

A. Prior to any testing, perform visual inspections to verify the following:
   1. The equipment is completely and properly installed
   2. The equipment is free from damage and defects
   3. Shipping blocks and restraints have been removed
   4. Electrical terminations have been properly tightened
   5. The equipment has been properly aligned
   6. The equipment has been properly lubricated
   7. The ventilation louvers are open and unobstructed
   8. The equipment is ready to be tested

3.02 MANUAL OPERATION

A. Prior to any testing, mechanical devices shall be exercised or rotated manually to verify that they operate properly and freely.

3.03 PRIMARY CABLE TESTS

A. Perform a continuity test, 2,500-volt DC megger test, AC high potential test, and a second 2,500-volt DC megger test on primary cables. The high potential test shall be performed at 45kV for new cable installations, and at 30kV when new cable has been spliced to existing cable.

3.04 POWER CABLE TESTS

A. Perform a continuity check and a 1,000 volt DC megger test on 600 volt power cables No. 4 AWG and larger.
   1. The megger test shall be performed between each pair of conductors and from each conductor to ground.
   2. The megger test shall be performed for 15 seconds or until the insulation resistance value stabilizes.
   3. The insulation resistance between conductors and from each conductor to ground shall be 100 megohms minimum in one minute or less. In addition, the lowest insulation resistance value shall not differ from the highest value by more than 20 percent.

3.05 CONTROL CABLE TESTS

A. Perform a continuity check on control and instrumentation wiring.

3.06 SECONDARY SWITCHGEAR AND SWITCHBOARD TESTS

A. Perform a continuity check and 1,000 volt DC megger test on buses, and on main and feeder breakers.

B. Perform a primary current injection test and a 'Ducter' (contact resistance) test on main breakers.

C. Perform a 1,000-volt DC megger test and a turns-ratio test on CT's and PT's.

D. Calibrate the metering.

3.07 SERVICE, DISTRIBUTION AND MOTOR CONTROL EQUIPMENT TESTS

A. Perform a 1,000-volt megger test on buses, motor starters and disconnect switches. This test may be combined with the feeder cable megger test by testing the devices and terminated cables together.

B. Perform a continuity check on motor control circuits and control panel internal wiring.

C. Perform an operational test on the controls.

D. Perform a continuity check and a 1,000-volt DC megger test on 3 phase distribution and isolation transformers.

3.08 MOTOR TESTS

A. Perform a 1,000-volt megger test on 460 volt, 3 phase motors, and a 500 volt megger test on 200 volt, 3 phase motors.

B. "Bump" motors to verify proper direction of rotation.

C. Run motors and check for vibration.

3.09 GROUNDING TESTS

A. Measure the resistance to ground of each ground rod before connection to the other ground rods. The resistance shall not exceed 25 ohms.

1. A single electrode which does not have a resistance to ground of 25 ohms or less shall be augmented by additional electrode(s).

B. Measure the resistance to ground of the total ground system with all connections completed. The resistance shall not exceed 2 ohms for primary services or 5 ohms for secondary services.

C. Tests of the resistance to ground shall be made using either the three point method or the fall-of-potential method.

D. Perform a continuity check from equipment ground bus bars and ground lugs to the ground system.

END OF SECTION

SECTION 26 29 23
VARIABLE FREQUENCY DRIVES

PART 1 GENERAL

1.01 SECTION INCLUDES

A. Variable Frequency Drive

B. Adjustable Frequency Controller.

1.02 REFERENCES

A. ANSI/NEMA ICS 6 - Enclosures for Industrial Controls and Systems

B. FS W-C-375 - Circuit Breakers, Molded Case; Branch Circuit and Service

C. NEMA ICS 2 - Industrial Control Devices, Controllers, and Assemblies

D. NEMA ICS 3.1- Safety Standards for Construction and Guide for Selection, Installation and Operation of Adjustable-Speed Drive Systemy

E. NEMA ICS 7 - Industrial Control and Sysstems: Adjustable Speed Drives

F. NEMA 250 - Enclosures for Electrical Equipment

G. NETA STS ATS - Acceptance Testing Specifications for Electrical Power Distrubution Equipment and Systems (International Electrical Testing Association)

H. NFPA 70 - National Electrical Code

1.03 SYSTEM DESCRIPTION

A. Furnish and install Variable Frequency Drive(s) (VFD) and provide all wiring and interconnection, applications programming, and start-up and test services to provide variable speed operation

B. The Subcontractor shall furnish and install VFDs as specified, complete with all auxiliary components as required to conform with this specification and drawings, including enclosures, transformers, filters, fuses, circuit breakers, MCP, switches, indicating lights, engraved nameplates, signal transducers, conduit and wire, and other components and accessories. VFDs shall be surface mounted in the locations indicated on the plans. VFD's shall be connected to existing MCC, as shown on drawings.

C. The Subcontractor shall furnish and install all necessary transducers, power supplies, or other instrumentation equipment as required to interface the VFDs with the BAS to produce a completely operational system in accordance with these specifications. The instrumentation furnished shall permit the BAS to control remotely the VFD so as to maintain stable operation at a programmable set point. The Subcontractor shall terminate control wiring or tubing at the BAS subpanel in the locations and manner directed by the University in order to place the BAS in control of the VFD

D. The Subcontractor shall provide an enclosure for the VFD. The enclosures shall be ventilated or otherwise adapted to control heat maintaining inside temperature not to exceed 40 degrees C. Prevent entrance of moisture, corrosive, or hazardous materials in accordance with the VFD manufacturer's specifications.

E. The Subcontractor shall provide panel-front speed indication of the VFD output in 10-100% of speed or in Hz (6-60 Hz). The Subcontractor shall provide panel-front manual controls for auto/manual switching of the VFD mode and for adjustment of VFD output in manual mode (10-100% speed or 6-60 Hz). Manual control shall be remotely performed at BAS office.

1.04 SUBMITTAL

A. Product Data: Provide catalog sheets showing voltage, controller size, ratings and size of switching and overcurrent protective devices, short circuit ratings, dimensions, and enclosure details.

B. Shop Drawings: Indicate front and side views of enclosures with overall dimensions and weights shown; conduit entrance locations and requirements; and nameplate legends; electrical

characteristics including voltage, frame size and trip ratings, and time-current curves of all equipment and components.

C. Test Reports: Indicate field test and inspection procedures and test results.

D. Manufacturer's Instructions: Indicate application conditions and limitations of use stipulated by testing agency. Include instructions for storage, handling, protection, examination, preparation, and installation of product.

E. Manufacturer's Field Reports: Indicate start-up inspection findings.

F. Operation Data: NEMA ICS 3.1. Include instructions for starting and operating controllers, and describe operating limits that may result in hazardous or unsafe conditions.

G. Maintenance Data: NEMA ICS 3.1. Include routine preventive maintenance schedule.

1.05 DELIVERY, STORAGE, AND HANDLING

A. Store in a clean, dry space. Maintain factory wrapping or provide an additional heavy canvas or heavy plastic cover to protect units from dirt, water, construction debris, and traffic.

B. Handle in accordance with manufacturer's written instructions. Lift only with lugs provided for the purpose. Handle carefully to avoid damage to components, enclosure, and finish.

C. Deliver products to site under provisions of Section 01600, Material and Equipment. Store and protect products under provisions of Section 01600, Material and Equipment.

1.06 OPERATION AND MAINTENANCE SERVICE

A. Provide service and maintenance of controller for one year from Date of Substantial Completion. Include; spare parts data listing, source and current prices of replacement parts and supplies, and recommended maintenance procedures and intervals

PART 2 PRODUCTS

2.01 MANUFACTURERS- - VARIABLE FREQUENCY DRIVE (VFD)

A. ABB: www.abb.com

B. Eaton: www.eaton.com

C. No Substitutions will be accepted

2.02 NOTES

A. VFD shall have pad-lockable circuit breaker (disconnect).

B. VFD shall have input and output line reactors and RFI filters.

C. VFD shall have EPROM chip for direct communication to Siemens controls.

D. Warranty shall be 2-years.

E. Factory start-up and training shall be included.

F. VFD shall restart automatically after power outage.

G. VFD's shall have an adjustable fail-safe mode. In the event of a comunications failure, the VFD shall maintain the last speed that the drive was set to.

H. Finish: Manufacture's Standard Enamel

I. Eclosures: NEMA 250, Type 1, suitable for equipment application in places regularly open to the public.

J. Variable Frequency Controllers: Enclosed controllers suitable for operating the indicated loads, in coformance with requirements of NEMA ICS 7. Select unspecified features and options in accordance with NEMA ICS 3.1.

2.03 OPERATING REQUIREMENTS

A. Displacement Power Factor: Between 1.0 and 0.95, lagging, over entire range of operating speed and load.

B. Operating Ambient: 0 degrees C to 40 degrees C.

C. Volts Per Hertz Adjustment: Plus or minus 10 percent.

D. Current Limit Adjustment: 60 to 110 percent of rated.

E. Acceleration Rate Adjustment: 0.5 to 30 seconds.

F. Deceleration Rate Adjustment: 1 to 30 seconds.

G. Input Signal: 4 to 20 mA DC.

2.04 COMPONENTS

A. Integrated Equipment Short Circuit Rating: 65,000 amperes rms symmetrical at 480 volts, 42,000 amperes rms symmetrical at 208 volts

B. Auxiliary Contacts: NEMA ICS 2; two normally open and closed contacts in addition to seal-in contact

C. Pushbuttons: NEMA ICS 2; START/STOP in front cover

D. Selector Switches: NEMA ICS 2; HAND/OFF/AUTO locking type, in front cover

E. Indicating Lights: NEMA ICS 2; RUN: green in front cover

F. Control Power Transformers: 120 volt secondary, 5 VA minimum, in each motor starter.

G. Configuration: Units front mounting only, accessible from the front only.

H. Enclosure: ANSI/NEMA ICS 6; Type 1

I. Finish: Manufacturer's standard gray enamel.

J. Provide phase loss protection relay with contacts to de energize each motor starter in control

K. Seismic Requirements: ANSI/IEEE 344; Class IV

L. Display: Provide integral digital display to indicate output voltage, output frequency, and output current.

M. Status Indicators: Separate indicators for overcurrent, overvoltage, ground fault, overtemperature, and input power ON.

N. Include undervoltage release.

O. Control Power Source: Separate circuit.

P. Door Interlocks: Furnish mechanical means to prevent opening of equipment with power connected, or to disconnect power if door is opened; include means for defeating interlock by qualified persons.

Q. Safety Interlocks: Furnish terminals for remote contact to inhibit starting under both manual and automatic mode.

R. Control Interlocks: Furnish terminals for remote contact to allow starting in automatic mode.

S. Emergency Stop: Use dynamic brakes for emergency stop function.

T. Disconnecting Means: Include integral fused disconnect switch on the line side of each controller.

U. Wiring Terminations: Match conductor materials and sizes indicated.

2.05 ACCESSORIES

A. The VFDs shall include on-board self-diagnostics and indicators for troubleshooting of all operational problems. As a minimum, the self-diagnostics shall indicate
   1. Over-current Fault
   2. Over-voltage Fault
   3. Control/logic Error Fault 4
   4. Ground Fault 5
   5. DC Power Supply Normal
   6. AC Undervoltage
   7. AC Overvoltage
   8. Overtemperature

9. Overload Shutdown
10. External Failure

2.06 SOURCE QUALITY CONTROL

A. Shop inspect and perform standard productions tests for each controller.

PART 3 EXECUTION

3.01 EXAMINATION

A. Verify that surface is suitable for controller installation.

B. Do not install controller until building environment can be maintained within the service conditions required by the manufacturer.

C. Verify that field measurements are as indicated on shop drawings.

3.02 INSTALLATION

A. Install in accordance with NEMA ICS 3.1 and manufacturer's instructions. Check that manufacturer recommended lead lengths are not exceeded.

B. The VFDs shall be totally enclosed in either wall-mounted or free-standing enclosures as specified elsewhere, NEMA 1, 4 or 12 if installed indoors, NEMA 4 or 12 if installed outdoors

C. Each VFD shall be installed with any isolation transformers, shielding, or power line filtering required to prevent the radiation or conduction of objectionable electromagnetic noise. Under no circumstances shall the VFD installation or operation interfere with local AM radio reception or with sensitive instrumentation or computer equipment in use in the facility. In the event that such interference results from a VFD installation, it shall be the sole responsibility of the Subcontractor to rectify the problem, either by addition of suitable isolation and/or filtering, shielding, grounding, etc. or by replacement of the VFD with a unit that does not cause such interference

D. Tighten accessible connections and mechanical fasteners after placing controller.

E. VFD shall be wall mounted or furnished with steel freestanding panels, as appropriate to the location and as specified
   1. Freestanding panels shall be securely anchored to the floor with steel bolts, the number and size of which shall be consistent with the size and weight of the enclosure, and consistent with seismic restraint requirements for seismic zone 4
   2. Wall mounted panels shall be secured to structural walls with steel bolts, the number and size of which shall be consistent with the size and weight of the enclosure, and consistent with seismic restraint requirements for the location

F. All installations shall meet the applicable requirements for seismic restraints as required by codes and standards. All enclosures shall be located so as to provide ready access to all controls and displays, and to allow full, unimpeded opening of all doors and covers. Access and clearance shall conform the requirements of the National Electrical Code, Article 110, and OSHA. All installations shall be subject to University's approval as to location, mounting, and wiring.

G. All VFD power, signal wiring, control power and motor leads shall be installed in separate rigid metallic electrical raceways, which shall be suitably grounded for VFD installations and the VFD manufacturer's recommendations

H. Select and install overload heater elements in motor controllers to match installed motor characteristics.

I. The Subcontractor shall test the completed installation for AM radio interference, and shall examine the power line input to, and output from, the VFD for harmonic noise. Telephone interference from the VFD(s) shall not exceed that specified in NEMA standard MGI 22.43. Subcontractor shall provide, at Subcontractor's expense, any additional isolation, filtering, or shielding required to eliminate any radiated or conducted noise that interferes in any way with the operations in the building When in operation, the unit shall not fail due to electro-static discharge simulated by arcing the leads of 600 VDC Meggar.

J. Provide engraved nameplates.

K. Neatly type label inside each motor controller door identifying motor served, nameplate horsepower, full load amperes, code letter, service factor, and voltage/phase rating. Place in clear plastic holder.

3.03 FIELD QUALITY CONTROL

A. Inspect and test in accordance with NETA STD ATS, except Section 4.

B. Perform inspections and tests listed in NETA STD ATS, Section 7.16.2.

3.04 MANUFACTURER'S FIELD SERVICES

A. Provide the service of the manufacturer's field representative to prepare and start controllers.

3.05 ADJUSTING

A. Make final adjustments to installed controller to assure proper, speed and loading of system when in operation operation. Obtain performance requirements from installer of driven loads.

3.06 DEMONSTRATION

A. Provide monitoring of voltage at the motor terminal during the demonstration. Submit results showing maximum voltage during operation..

B. Demonstrate operation of controllers in automatic, manual, Use sheet metal channel to bridge studs above and below cabinets and panelboards recessed in hollow partitions.and remote modes.

END OF SECTION

SECTION 26 51 00
INTERIOR LIGHTING

PART 1 GENERAL

1.01 SECTION INCLUDES

A. Interior luminaires.

B. Emergency lighting units.

C. Exit signs.

D. Ballasts and drivers.

E. LED lighting fixtures.

F. Fluorescent emergency power supply units.

G. Lamps.

H. Luminaire accessories.

1.02 REFERENCE STANDARDS

A. ANSI C78.379 - American National Standard for Electric Lamps -- Reflector Lamps -- Classification of Beam Patterns; 2006.

B. ANSI C82.1 - American National Standard for Lamp Ballast - Line Frequency Fluorescent Lamp Ballast; 2004.

C. ANSI C82.4 - American National Standard for Ballasts for High-Intensity-Discharge and Low Pressure Sodium Lamps (Multiple-Supply Type); 2002.

D. NECA 1 - Standard for Good Workmanship in Electrical Construction; National Electrical Contractors Association; 2010.

E. NECA/IESNA 500 - Standard for Installing Indoor Commercial Lighting Systems; National Electrical Contractors Association; 2006.

F. NECA/IESNA 502 - Standard for Installing Industrial Lighting Systems; National Electrical Contractors Association; 2006.

G. NEMA WD 6 - Wiring Devices - Dimensional Requirements; National Electrical Manufacturers Association; 2002 (R2008).

H. NFPA 70 - National Electrical Code; National Fire Protection Association; Most Recent Edition Adopted by Authority Having Jurisdiction, Including All Applicable Amendments and Supplements.

I. NFPA 101 - Life Safety Code; National Fire Protection Association; 2012.

J. UL 924 - Emergency Lighting and Power Equipment; Current Edition, Including All Revisions.

K. UL 1598 - Luminaires; Current Edition, Including All Revisions.

1.03 SUBMITTALS

A. See Division 1 - Administrative Requirements, for submittal procedures.

B. Shop Drawings: Indicate dimensions and components for each fixture that is not a standard product of the manufacturer.

C. Product Data: Provide manufacturer's standard catalog pages and data sheets including detailed information on luminaire construction, dimensions, ratings, finishes, mounting requirements, listings, service conditions, photometric performance, installed accessories, and ceiling compatibility; include model number nomenclature clearly marked with all proposed features.

D. Manufacturer's Installation Instructions: Indicate application conditions and limitations of use stipulated by product testing agency. Include instructions for storage, handling, protection, examination, preparation, and installation of product.

E. Operation and Maintenance Data: Instructions for each product including information on replacement parts.

1.04 QUALITY ASSURANCE

A. Conform to requirements of NFPA 70.

B. Manufacturer Qualifications: Company specializing in manufacturing the products specified in this section with minimum three years documented experience.

1.05 DELIVERY, STORAGE, AND PROTECTION

A. Keep products in original manufacturer's packaging and protect from damage until ready for installation.

PART 2 PRODUCTS

2.01 LUMINAIRES

A. Provide products that comply with requirements of NFPA 70.

B. Provide products that are listed and labeled as complying with UL 1598, where applicable.

C. Provide products listed and classified by Underwriters Laboratories Inc. as suitable for the purpose specified and indicated.

D. Unless otherwise indicated, provide complete luminaires including lamp(s) and all sockets, ballasts, reflectors, lenses, housings and other components required to position, energize and protect the lamp and distribute the light.

E. Unless specifically indicated to be excluded, provide all required conduit, boxes, wiring, connectors, hardware, supports, trims, accessories, etc. as necessary for a complete operating system.

F. Provide products suitable to withstand normal handling, installation, and service without any damage, distortion, corrosion, fading, discoloring, etc.

G. Refer to lighting schedule as stated on the drawings.

2.02 EMERGENCY LIGHTING UNITS

A. Description: Emergency lighting units complying with NFPA 101 and all applicable state and local codes, and listed and labeled as complying with UL 924.

B. Operation: Upon interruption of normal power source or brownout condition exceeding 20 percent voltage drop from nominal, solid-state control automatically switches connected lamps to integral battery power for minimum of 90 minutes of rated emergency illumination, and automatically recharges battery upon restoration of normal power source.

C. Battery:
   1. Size battery to supply all connected lamps, including emergency remote heads where indicated.

D. Diagnostics: Provide power status indicator light and accessible integral test switch to manually activate emergency operation.

E. Provide low-voltage disconnect to prevent battery damage from deep discharge.

2.03 EXIT SIGNS

A. Description: Exit signs and similar signs for special purpose applications such as area of refuge/rescue assistance.

B. All Exit Signs: Internally illuminated with LEDs unless otherwise indicated; complying with NFPA 101 and all applicable state and local codes, and listed and labeled as complying with UL 924.
   1. Number of Faces: Single or double as indicated or as required for the installed location.
   2. Directional Arrows: As indicated or as required for the installed location.

2.04 LAMPS

A. Manufacturers shall be GE, Phillip Lighting, Sylvania, or approved equal.

B. Lamp shall all be from the same manufacturer.
   1. Lamps shall manufactured within 60 days of delivery.
   2. Lamps shall come in from the same Lot Number.
   3. Lamps shall be listed with ballasts installed in fixtures.

C. All Lamps:
   1. Unless explicitly excluded, provide new, compatible, operable lamps in each luminaire.
   2. Verify compatibility of specified lamps with luminaires to be installed. Where lamps are not specified, provide lamps per luminaire manufacturer's recommendations.
   3. Minimum Efficiency: Provide lamps complying with all current applicable federal and state lamp efficiency standards.
   4. Color Temperature Consistency: Unless otherwise indicated, for each type of lamp furnish products which are consistent in perceived color temperature. Replace lamps that are determined by the Engineer to be inconsistent in perceived color temperature.

2.05 OCCUPANCY SENSORS

A. Occupancy Sensors shall be dual technology occupancy sensors.

2.07 LED Light Fixtures

A. Each luminaire shall consist of an assembly that utilizes LEDs as the light source. In addition, a complete luminaire shall consist of a housing, LED array, and electronic driver (power supply) and integral controls as per this specification.

B. Each luminaire shall be designed to operate at an average operating temperature of 25°C.

C. Each luminaire shall meet all parameters of this specification throughout the minimum operational life when operated at the average operating temperature.

D. Burn-In Time: All LED fixtures (100% of each lot) shall undergo a minimum eight-hour burn-in test during manufacturing.

E. Testing Data: Manufacturer shall provide optical performance, polar diagrams, and relevant luminance and illuminance photometric data based on test results from independent testing lab.

F. Single Source Components: All LED fixtures and power/data supplies shall be provided by a single manufacturer to ensure compatibility. Manufacturer shall have at least eight years of experience designing, selling and supporting intelligent LED systems.

G. LED modules/arrays shall have a minimum CRI of 85 unless and minimum temperature of 4000K unless otherwise specified.

H. Color temperature variation shall not exceed +/- 100 degrees Kelvin at installation, and +/- 200 degrees Kelvin over the life of the module.

I. LED modules/arrays shall deliver at least 70% of initial lumens, when installed in-situ, for a minimum of 50,000 hours

PART 3 EXECUTION

3.01 EXAMINATION

A. Verify that field measurements are as shown on the drawings.

B. Verify that outlet boxes are installed in proper locations and at proper mounting heights and are properly sized to accommodate conductors in accordance with NFPA 70.

C. Verify that suitable support frames are installed where required.

D. Verify that branch circuit wiring installation is completed, tested, and ready for connection to luminaires.

E. Verify that conditions are satisfactory for installation prior to starting work.

3.02 PREPARATION

A. Provide extension rings to bring outlet boxes flush with finished surface.

B. Clean dirt, debris, plaster, and other foreign materials from outlet boxes.

3.03 INSTALLATION

A. Coordinate locations of outlet boxes provided under Section 26 05 37 as required for installation of luminaires provided under this section.

B. Install products according to manufacturer's instructions.

C. Install luminaires securely, in a neat and workmanlike manner, as specified in NECA 1 (general workmanship), NECA 500 (commercial lighting), and NECA 502 (industrial lighting).

D. Install luminaires plumb and square and aligned with building lines and with adjacent luminaires.

E. Install accessories furnished with each luminaire.

F. Bond products and metal accessories to branch circuit equipment grounding conductor.

G. Install lamps in each luminaire.

3.04 ADJUSTING

A. Aim and position adjustable luminaires to achieve desired illumination as indicated or as directed by Engineer. Secure locking fittings in place.

B. Aim and position adjustable emergency lighting unit lamps to achieve optimum illumination of egress path as required or as directed by Engineer or authority having jurisdiction.

C. Exit Signs with Field-Selectable Directional Arrows: Set as indicated or as required to properly designate egress path as directed by Engineer or authority having jurisdiction.

3.05 CLEANING

A. Clean surfaces according to manufacturer's instructions to remove dirt, fingerprints, paint, or other foreign material and restore finishes to match original factory finish.

3.06 PROTECTION

A. Protect installed luminaires from subsequent construction operations.

END OF SECTION

ATTACHMENT A

ABATEMENT REQUIREMENTS

The abatement removal work described in the following specifications shall be included in the lump sum project cost per the contract price schedule.

Attachment A1:
"Asbestos Abatement Project Specification – 2nd Floor Mechanical Room" dated July 15, 2014 by ProTech Consulting and Engineering.

Attachment A2:
Although no abatement is required for lead containing materials on this project, there are areas with lead containing paint. Proper work procedures around such material shall followed as described in the following specification:

"Lead–Base and Lead-Containing Materials Instruction to all Contractors/ Bidders" Dated July 15, 2014 by ProTech Consulting and Engineering.

The original site investigation report "Pre-Demolition / Renovation Asbestos & Lead Survey and Evaluation, 2nd Floor Mechanical Room" by ProTech Consulting and Engineering, is available for review at San Leandro City Hall, Engineering and Transportation Department, 835 East 14th Street, San Leandro, CA. Contact: Mark Goralka, Associate Engineer, 510-577-3329, mgoralka@sanleandro.org

ATTACHMENT A
ABATEMENT REQUIREMENTS

The abatement removal work described in the following specifications shall be included in the lump sum project cost per the contract price schedule.

Attachment A1:
"Asbestos Abatement Project Specification – 2nd Floor Mechanical Room" dated July 15, 2014 by ProTech Consulting and Engineering.

Attachment A2:
Although no abatement is required for lead containing materials on this project, there are areas with lead containing paint. Proper work procedures around such material shall followed as described in the following specification:

"Lead–Base and Lead-Containing Materials Instruction to all Contractors/ Bidders" Dated July 15, 2014 by ProTech Consulting and Engineering.

The original site investigation report "Pre-Demolition / Renovation Asbestos & Lead Survey and Evaluation, 2nd Floor Mechanical Room" by ProTech Consulting and Engineering, is available for review at San Leandro City Hall, Engineering and Transportation Department, 835 East 14th Street, San Leandro, CA. Contact: Mark Goralka, Associate Engineer, 510-577-3329, mgoralka@sanleandro.org

ATTACHMENT A1

ProTech
Consulting & Engineering

1208 MAIN STREET, REDWOOD CITY, CA 94063
P: (650) 569-4020 • F: (650) 569-4023 • E: info@protech-cal.com

ASBESTOS ABATEMENT PROJECT SPECIFICATION

ASBESTOS ABATEMENT PROJECT

2nd Floor Mechanical Room

City of San Leandro Public Safety Building
835 E 14th Avenue
San Leandro, California

PREPARED FOR

City of San Leandro
835 E 14th Avenue
San Leandro, California

PREPARED BY:

PROTECH CONSULTING AND ENGINEERING

July 15, 2014

TABLE OF CONTENTS

HAZ-MAT PROJECT SPECIFICATION

PART 1 - GENERAL ADMINISTRATIVE REQUIREMENTS

1.00 Description	Page 3
1.01 Description of Work	Page 3
1.02 Definitions	Page
1.03 Asbestos Hazard	Page
1.04 Contractor Qualifications	Page
1.05 Notices and Record Keeping	Page
1.06 Project Submittals and On Site Documents	Page
1.07 Reference Documents	Page
1.08 Consultant / Owner's Representative	Page

PART 2 - MATERIALS AND EQUIPMENT

2.00 Materials	Page
2.01 Tools and Equipment	Page

PART 3 - EXECUTION

3.00 Prohibited Activities	Page
3.01 Personal Protection	Page
3.02 Air Monitoring	Page
3.03 Safety Procedures for Power and Lighting	Page
3.04 Temporary Facilities	Page
3.05 Control Work Area Access	Page
3.06 Work Area Preparation	Page
3.07 Pressure Differential System	Page
3.08 Asbestos Abatement	Page
3.09 Entering the Work Area	Page
3.10 Packaging, Labeling, and Disposal of Asbestos Waste	Page
3.11 Project Decontamination	Page
3.12 Final Clearance	Page
3.13 General Work Area Clean up	Page

APPENDICIES

Lead (Pb) Instructions to All Bidders	Appendix 1
Asbestos & Lead Survey Report – Revision 1	Appendix 2

ASBESTOS ABATEMENT

PART 1 - GENERAL AND ADMINISTRATIVE REQUIREMENTS

1.00 DESCRIPTION

A. The asbestos abatement contractor shall furnish all labor, material, facilities, equipment, services, employee training and testing, permits and agreements necessary to perform the work required for asbestos removal, encapsulation, decontamination, disposal, and all other work in accordance with these specifications, the latest regulations from the US. Environmental Protections Agency (EPA), Cal-EPA, the Occupational Safety and Health Administration (OSHA), the State of California Department of Industrial Relations (Cal/OSHA), the recommendations of the National Institute of Occupations Safety and Health (NIOSH), and any other applicable federal state and local government regulations. Whenever there is a conflict or overlap of the above references, the most stringent provision shall apply.

B. Contractor must visit the work site to obtain first-hand knowledge of all existing conditions including ACM quantities. Contractor is responsible for all unusual conditions or deviations from the specifications that exist at the time of their site examination, and such conditions must be reflected in the bid proposal. Contractor will not be given extra payments above the accepted bid prices for conditions that can be determined by examining the site, all Contract Documents, and drawings prior to the submission of proposals.

C. No signs may be displayed on or about the Owner's property (except those required by law) without the Owner's specific approval; the size, content, and location to be as specified by the Owner. Advertising signs displaying the word "asbestos" or implying asbestos abatement are prohibited at the work site or around the facility.

1.01 DESCRIPTION OF WORK

A. The work specified herein includes the abatement, encapsulation, and disposal of ACM/ACCM by qualified persons who are knowledgeable, trained, and certified to perform such work in compliance with all applicable federal, state, and local codes and regulations.

1. Pre-Abatement Tasks

   a. Submit required pre-job submittals prior to mobilization
   b. Construct needed temporary facilities
   c. Individually tested and certify HEPA equipped air filtration devices with 0.3 µm dioctylphthalate (DOP) particles
   d. Individually fit test each worker with appropriate respiratory protection.
   e. Seal and/or lock-out HVAC supply duct servicing abatement work areas
   f. Install GFI power sources

2. Work Area Preparation

   a. Perform non-asbestos pre-cleaning
   b. Pre-clean work area surfaces affected by asbestos dust, debris, fall-out or contamination.
   c. Prepare work area containment systems as specified
   d. Initiate negative air, HEPA filtration machinery
   e. Construct decontamination facilities as specified
   f. Install magnehelic gage with continuous disc chart recorder
   g. Where necessary, remove and dispose of non-ACM building components, finishes, fixtures, etc. that are scheduled for demolition to access all ACM/ACCM.

3. Asbestos Abatement Activities

   a. Maintain negative pressure inside of the asbestos abatement work areas for eight hours prior to any ACM removal.
   b. Wet removal all ACM as specified. Where necessary, remove and dispose of non-ACM building components, finishes, fixtures, etc. that are scheduled for demolition to access all ACM/ACCM.
   c. Detail clean all barriers and work area surfaces.
   d. Following final inspection of the work area, perform encapsulation of all work areas surfaces.
   e. Following visual and final clearance, remove all barriers and check for any residual ACM debris.
   f. Demobilize from site.
   g. Submit all project close-out submittal documents.

4. Asbestos Abatement Scope of Work

   a. The work specified herein includes the removal of **various ACM's/ACCM's** at the subject site.
   b. The Contractor shall wet remove and dispose of all asbestos-containing building materials as follows:

2nd Floor Mechanical Room			
	Material Description	Material Location(s)	Approx Quantity
1.	Gray residual mastic (mastic below old insulation fasteners)	Inside air handler of E-1	<100 Sq ft
2.	White pipe elbow insulation (TSI elbows)	North of air handler E-1	2 Elbows

1.02 DEFINITIONS

Abatement - Procedures to control fiber release from asbestos-containing building materials. Includes removal, enclosure or encapsulation.

Aggressive method - means removal or disturbance of building material by sanding, abrading, grinding or other method that breaks, crumbles, or disintegrates intact ACM.

Air Monitoring - The process of measuring the asbestos fiber content of a specific volume of air in a stated period of time using methods approved or recommended by OSHA, EPA, NIOSH or other method approved by Owner or Consultant.

Amended water - means water to which surfactant (wetting agent) has been added to increase the ability of the liquid to penetrate ACM.

Asbestos - includes chrysotile, amosite, crocidolite, tremolite asbestos, anthophyllite asbestos, actinolite asbestos, and any of these minerals that has been chemically treated and/or altered. For purposes of this standard, "asbestos" includes PACM, as defined below.

Asbestos-Containing Building Material (ACBM): Means any construction material which contains greater than 1% asbestos.

Asbestos-Containing Construction Material (ACCM): Means any construction material that contains $^{1}/_{10}$ of 1% to 1% asbestos by weight.

Asbestos-containing material (ACM) - means any material containing more than one percent asbestos.

Assistant Secretary - means the Assistant Secretary of Labor for Occupational Safety and Health, U.S. Department of Labor, or designee.

Authorized person - means any person authorized by the employer and required by work duties to be present in regulated areas.

Building/facility owner - is the legal entity, including a lessee, which exercises control over management and record keeping functions relating to a building and/or facility in which activities covered by this standard take place.

Certified Industrial Hygienist (CIH) - means one certified in the practice of industrial hygiene by the American Board of Industrial Hygiene.

Class I asbestos work - means activities involving the removal of TSI and surfacing ACM and PACM.

Class II asbestos work - means activities involving the removal of ACM which is not thermal system insulation or surfacing material. This includes, but is not limited to, the removal of asbestos-containing wallboard, floor tile and sheeting, roofing and siding shingles, and construction mastics.

Class III asbestos work - means repair and maintenance operations, where "ACM", including-TSI and surfacing, is likely to ACM and PACM, may be disturbed.

Class IV asbestos work - means maintenance and custodial activities during which employees contact but do not disturb ACM or PACM and activities to clean up dust, waste and debris resulting from Class I, II, and III activities.

Clean room - means an uncontaminated room having facilities for the storage of employees' street clothing and uncontaminated materials and equipment.

Closely resemble- means that the major workplace conditions which have contributed to the levels of historic asbestos exposure, are no more protective than conditions of the current workplace.

Competent person - means, in addition to the definition in 29 CFR 1926.32 (f), one who is capable of identifying existing asbestos hazards in the workplace and selecting the appropriate control strategy for asbestos exposure, who has the authority to take prompt corrective measures to eliminate them, as specified in 29 CFR 1926.32(f): in addition, for Class I and Class II work who is specially trained in a training course which meet meets the criteria of EPA's Model Accreditation Plan (40 CFR 763) for supervisor, or its equivalent and, for Class II and Class IV work, who is trained in a manner consistent with EPA requirements for training of local education agency maintenance and custodial staff as set forth at [40 CFR 763.92 (a)(2)].

Consultant - For the purpose of the work described herein, ProTech Consulting and Engineering shall be the Consultant.

Critical barrier - means one or more layers of plastic sealed over all openings into a work area or any other similarly placed physical barrier sufficient to prevent airborne asbestos in a work area from migrating to an adjacent area.

Decontamination area - means an enclosed area adjacent and connected to the regulated area and consisting of an equipment room, shower area, and clean room, which is used for the decontamination of workers, materials, and equipment that are contaminated with asbestos.

Demolition - means the wrecking or taking out of any load-supporting structural member and any related razing, removing, or stripping of asbestos products.

Director - means the Director, National Institute for Occupational Safety and Health, U.S. Department of Health and Human Services, or designee.

Disturbance - means activities that disrupt the matrix of ACM or PACM, crumble or pulverize ACM or PACM, or generate visible debris from ACM or PACM. This term includes activities that disrupt the matrix of ACM or PACM, render ACM or PACM friable, or generate visible debris. Disturbance includes cutting away small amounts of ACM and PACM, no greater than the amount which can be contained in one standard sized glove bag or waste bag in order to access a building component. In no event shall the amount of ACM or PACM so disturbed exceed that which can be contained in one glove bag or waste bag which shall not exceed 60 inches in length and width.

Employee exposure - means that exposure to airborne asbestos that would occur if the employee were not using respiratory protective equipment.

Equipment room (change room) - means a contaminated room located within the decontamination area that is supplied with impermeable bags or containers for the disposal of contaminated protective clothing and equipment.

Fiber - means a particulate form of asbestos, 5 micrometers or longer, with a length-to-diameter ratio of at least 3 to 1.

Glovebag - means not more than a 60 x 60 inch impervious plastic bag-like enclosure affixed around an asbestos-containing material, with glove-like appendages through which material and tools may be handled.

High-efficiency particulate air (HEPA) - filter means a filter capable of trapping and retaining at least 99.97 percent of all mono-dispersed particles of 0.3 micrometers in diameter.

Homogeneous area - means an area of surfacing material or thermal system insulation that is uniform in color and texture.

Industrial hygienist - means a professional qualified by education, training, and experience to anticipate, recognize, evaluate and develop controls for occupational health hazards.

Intact - means that the ACM has not crumbled, been pulverized, or otherwise deteriorated so that the asbestos it is no longer likely to be bound with its matrix.

Modification - means a changed or altered procedure, material or component of a control system, which replaces a procedure, material or component of a required system. Omitting a procedure or component, or reducing or diminishing the stringency or strength of a material or component of the control system is not a "modification" for purposes of paragraph (g)(6)-of this section.

Negative Initial Exposure Assessment - means a demonstration by the employer, which complies with the criteria in paragraph (f)(2)(iii) of this section, that employee exposure during an operation is expected to be consistently below the PEL.

PACM - means "presumed asbestos containing material".

Permissible Exposure Level (PEL) - A level of airborne fibers specified by OSHA as an occupational exposure standard for asbestos. It is 0.1 fibers per cubic centimeter of air, 8-hour time weighted average, as measured by phase contrast microscopy.

Presumed Asbestos Containing Material - means thermal system insulation and surfacing material found in buildings constructed no later than 1980. The designation of a material as "PACM" may be rebutted pursuant to paragraph (k)(5) of this section.

Project Designer - means a person who has successfully completed the training requirements for an abatement project designer established by 40 U.S.C. Sec. 763.90(g).

Regulated area - means: an area established by the employer to demarcate areas where Class I, II, and III asbestos work is conducted, and any adjoining area where debris and waste from such asbestos work accumulate; and a work area within which airborne concentrations of asbestos, exceed or there is a reasonable possibility they may exceed the permissible exposure limit.

Requirements for regulated areas are set out in paragraph (e) of this section.

Removal - means all operations where ACM, ACCM, ACBM, and/or PACM is taken out or stripped from structures or substrates, and includes demolition operations.

Renovation - means the modifying of any existing structure, or portion thereof.

Repair - means overhauling, rebuilding, reconstructing, or reconditioning of structures or substrates, including encapsulation or other repair of ACM or PACM attached to structures or substrates.

Surfacing material - means material that is sprayed, troweled-on or otherwise applied to surfaces (such as acoustical plaster on ceilings and fireproofing materials on structural members, or other materials on surfaces for acoustical, fireproofing, and other purposes).

Surfacing ACM - means surfacing material which contains more than 1% asbestos.

Thermal system insulation (TSI) - means ACM applied to pipes, fittings, boilers, breaching, tanks, ducts or other structural components to prevent heat loss or gain.

Thermal system insulation ACM - is thermal system insulation which contains more than 1% asbestos.

1.03 ASBESTOS HAZARD

A Asbestos-containing material when damaged or disturbed is subject to fiber releases. Wet methods are a primary means of controlling fiber release. Strict compliance with each of the provisions outlined in these specifications for the encapsulation, repair and handling of asbestos-containing material is of great importance, because:

1. The inhalation of airborne asbestos fibers can cause very serious often fatal diseases.

2. Workers may not be aware they are inhaling asbestos fibers.

3. Symptoms of the diseases do no appear for many years.

4. Only the contractor and his employees can prevent the inhalation of asbestos fibers which can lead to the development of asbestos-related disease.

5. No insurance is available to provide for asbestos related disease.

B. Proposition 65 Notice: Under California Health and Safety Code Sections 25249.5 through 25249.13, asbestos has been listed as a chemical known to the State of California to cause cancer. As a Contractor, you and your employees will be working in areas in which asbestos-

containing materials are present. This notice constitutes the warning of the presence of a known carcinogen required by Proposition 65. It is your duty to follow all requirements of Proposition 65.

1.04 CONTRACTOR QUALIFICATIONS

A. Licensing, Certification:
The Contractor shall possess all required licenses, registrations, and credentials to perform the work of this specification. All credentials shall be valid, current and in good standing prior to, and throughout all work performed by Contractor. Credentials shall include but no necessarily be limited to: asbestos license issued by the California State Contractors Licensing Board and Department of Occupational Safety and Health Administration (DOSH asbestos registration).

B. Personnel training:
The work specified herein shall be performed by under the direct management and supervision of a competent person and technicians/workers who are trained, knowledgeable and qualified in the state-of-the-art techniques of asbestos abatement, handling and subsequent cleaning of contaminated areas.

C. Project oversight and supervision:
The Contractor must provide a full-time General Superintendent who is experienced in administration and supervision of asbestos abatement projects including work practices, protective measures for building and personnel, disposal procedures, etc. This person shall be the Contractor's Competent Person as required by 40 CFR Part 763 and OSHA in CCR Title 8, § 1529. The Competent person shall be the Contractor's representative responsible for compliance with all applicable federal, state and local regulations, particularly those relating to asbestos-containing material. This person must have completed a course at an EPA Training Center or equivalent certificate course in asbestos abatement procedures, have had a minimum of two (2) years on-the-job training and meet any additional requirements set forth in CCR Title 8, § 1529 for a Competent Person.

1.05 NOTICES AND RECORD KEEPING

A. Contractor shall maintain for at least thirty (30) years, a record for each asbestos project in which the Contractor engages. Each record shall include the following information: The name, address, and social security number of all personnel involved with the project, the name address and social security number of the OSHA "Competent Person" who will supervise the work, the amount of asbestos material that was removed, repaired, encapsulated or disturbed, the commencement and completion date of the work, copies of Hazardous Waste Manifest(s), personal air monitoring results and any other appropriate information.

B. Special Reports:
Except as otherwise indicated, submit special reports directly to Owner within one day of occurrence requiring special report, with copy to Owner's Representative and others affected by occurrence.

C. Reporting Unusual Events:
When an event of unusual and significant nature occurs at the site (examples: failure of negative pressure system, rupture of temporary enclosures), prepare and submit a special report listing chain of events, persons participating, response by Contractor's personnel, evaluation of results or effects, and similar pertinent information. When such events are known or predictable in advance, advise Owner in advance at earliest possible date.

D. Reporting Accidents:
Prepare and submit reports of significant accidents, at site and anywhere else work is in progress. Record and document data and actions; comply with industry standards. For this purpose, a significant accident is defined to include events where personal injury is sustained, or property loss of substance is sustained, or where the event posed a significant threat of loss or personal injury.

E. Daily Logs and Journals:
During the work, Contractor shall maintain a daily log which will be kept at the job site. Items to be included in the daily log shall include but are not limited to the following:

1. Meetings; purpose, attendees, discussions, items of resolution (brief)

2. Visitations; authorized and unauthorized

3. Sign-in sheets of all personnel entering and leaving the work area

5. Personal air monitoring results

1.06 PROJECT SUBMITTALS AND ON SITE DOCUMENTS

A. Pre-Job Submittals:
Before the start of work, submit the following to the Owner's Representative for review. No work shall begin until these submittals have been approved by the Owner or Owner's representative.

1. Work Plan which contains specific information related to site preparation and containment construction, asbestos abatement/removal procedures and hazardous waste handling, load-out and disposal procedures. The Work Plan must also include an Emergency Contingency Plan which, at a minimum, addresses procedures which shall be followed in the event of an accident, breach of containment, power failure, water leakage and fire.

2. Written Respiratory Protection Program that complies with OSHA requirements CCR Title 8, § 1529, CCR subchapter 7 § 5144, CFR 1926.1101 and ANSI Z88.2 -1980 "Practices for Respiratory Protection".

3. Detailed schedule of work to be performed; schedule shall include abatement activities and dates.

4. Waste Transportation and Active Asbestos Waste:
Submit copies of proof of all EPA, DOT, and DHS, licenses, registrations, and certifications for all hazardous waste haulers and active asbestos waste sites intended for use on this project. Provide the name, address, telephone number, contact for each vendor entity.

5. Personnel Training:
Provide documentation that certifies the training qualifications of the qualified competent Person and all workers who will be assigned to this project. Personnel training for this

project shall comply with the training requirements of 40 CFR Part 763 and CCR Title 8, § 1529.

6. Employee Medical Examinations:
   Provide proof of medical examination conducted within the last 12 months in compliance with OSHA regulations, CCR Title 8, § 1529 for each worker who will be assigned to this project.

7. Notifications:
   Provide documentation that the Contractor has obtained all applicable permits and made required notifications from/to all appropriate regulating agencies, including, but not limited to the CAL/OSHA temporary work-site notification and the BAAQMD NESHAPs notification, and any applicable local agencies.

8. Licenses:
   Submit copies of: valid California State contractors license, California State asbestos certification, DOSH registration and all State and Local licenses and permits necessary to carry out the work of this specification.

9. Material Safety Data Sheets:
   Submit the Material Safety Data Sheet, or equivalent, in accordance with the OSHA Hazard Communication Standard (29 CFR 1910.1200) for materials, chemicals, and supplies proposed for use during the work of this specification.

B. Post-Job Submittals:
   Upon completion of the project, the Contractor shall provide 2 copies of all project documentation to the Owner. Post-job submittals shall be provided for final acceptance of the work by the Owner prior to final payment to the Contractor and normal termination of the Contract. This project documentation should include, but is not limited to:

   1. A complete record, certified by the testing laboratory, of all personal air monitoring results with 8-hour TWA data.

   2. All hazardous waste manifests and/or waste shipment records documenting the acceptance of all asbestos waste generated during the project from the designated land fill. The contractor must provide documentation that the designated land fill has been made aware that the materials disposed at it's site contains asbestos.

   3. All field documentation including daily logs, journals, visitors log, DOP test results, special report, etc.

   4. Supporting documentation for completion as indicated in these contract documents.

   5. Submit a statement showing an accounting of any changes to the Contract Sum.

   6. Any and all documents delivered with the pre-job submittal package that that were updated, altered or amended in any way during the project.

   7. Employee training, fit test, and medical certificates for any and all personnel who performed work on the project whose certificates were not provided in the pre-job submittal package.

C. On-Site Records
   The following records shall be maintained on-site and available for review throughout the entire course of the Work:

1. All pre-job submittal list above.

2. Personal air monitoring results, including 30 minute excursion sampling results and calculated 8 hour TWA exposures for Contractor employees

3. Work Area entry/exit log for each day and each shift of the Work

6. Contractor's IIPP and Hazard Communication Programs

7. Respiratory Protection Program

8. Confined Space Entry Program (if applicable).

9. The contractor will post in a visible place inside or directly outside (as is most convenient) of the clean room a copy of:

   - Emergency phone numbers.
   - Written work plan and Emergency Contingency Plan.
   - Required DOSH postings
   - Fire extinguisher locations and inspection data.

1.07 REFERENCE DOCUMENTS

A. All work specified in this document shall conform to the following applicable codes, ordinances, rules, regulations, orders and standards. Where conflicting or overlapping requirements or specifications exist, the more stringent requirements shall apply.

B. The Contractor shall assume full responsibility and liability for the compliance with all applicable Federal, State, and local regulations, standards and guidance documents pertaining to work practices, hauling, disposal, and protection or workers, visitors to the site, and person occupying areas adjacent to the site.

C. Laws and Regulations: Compliance is required with applicable federal, state, municipal, and local regulations, including but not limited to:

   1. Federal laws and regulations: Occupational Safety and Health Act, 29 USC 651 et seq., and all applicable Occupational Safety and Health Administration (OSHA) regulations thereunder; Clean Air Act, 42 USC 7401 et seq., and all applicable U.S. Environmental Protection Agency (EPA) regulations thereunder; Hazardous Materials Transportation Act, 49 USC 1801 et seq., and all applicable Department of Transportation (DOT) regulations thereunder.

   2. State of California laws and regulations: Hazardous Substances Information and Training Act, Labor Code 6360 et seq.; Labor Code 6401.7, 6408, 6501.5 through 6501.9, 6503.5, 6505.5, 9021.5, 9030; all applicable regulations of the Department of Industrial Relations (DIR) including 8 CCR 340 through 342, 1531, 1509, 3202, 5144, 5156 through 5158, 5194, 5208 and 1529; Hazardous Waste Control Law, Health and Safety Code 25100 et seq., and all applicable Department of Toxic Substances Control (DTSC) regulations thereunder, including 22 CCR Div. 4.5 et seq.; Safe Drinking Water and Toxic Enforcement Act of 1986, Health & Safety Code 25249.5 et seq., and all applicable regulations thereunder, including 22 CCR 12100 et seq.; Bus. & Prof. Code 7058.5 and corresponding regulations, including 16 CCR Ch. 8.

   3. Local laws and regulations: Bay Area Air Quality Management District (BAAQMD), Regulation 11, Rule 2.

D. Codes, Standards and Guidance Documents

1. National and State Fire Code, Electrical Code, Plumbing Code, Building Code, and other related codes where applicable.

2. ASTM - American Society for Testing and Materials

3. ANSI - American National Standards Institute

4. ULI - Underwriters Laboratories, Inc.

1.08 CONSULTANT / OWNERS REPRESENTATIVE

At the Owner's option, ProTech Consulting and Engineering may act as The Consultant and will be the Owner's Representative to Perform the following:

A. Have free access to all asbestos work areas.

B. To assist in interpretation of procedures.

C. To advise on all provisions of the contract documents pertaining to the control of asbestos.

D. Advise client on work stoppage if a situation presenting a health hazard to workers or Owner's employees or occupants of the building is observed. The Consultant shall not have authority to stop work without the clients approval.

E. To act as Owner's liaison in technical matters involving the asbestos-related work.

F. To perform air sampling inside the asbestos work area during the project. The Contractor shall cooperate fully with Consultant, consultant's agents and employees, and ensure cooperation of his/her workers during collection of air samples and work area inspections.

G. Consultant's role in advising the Owner on environmental health matters does not relieve the Contractor's obligation to comply with all applicable Federal, State, and local regulations, standards and guidance documents. Air monitoring results generated by Consultant shall not be used by the Contractor to represent compliance with regulatory agency requirements for monitoring of worker's exposure to airborne asbestos, nor shall any other activity on the part of Consultant represent the Contractor's compliance with applicable health and safety regulations.

PART 2 - MATERIALS AND EQUIPMENT

2.00 MATERIALS

A. The Contractor shall provide all materials and equipment necessary to complete the Work in accordance with applicable regulations and this Specification. Equipment shall be free of asbestos-contamination resulting from use at previous job sites.

B. Deliver all materials in original packages, containers, or bundles bearing the name of the manufacturer and the brand name.

C. Store all materials subject to damage off the ground, away from wet or damp surfaces, and under cover sufficient to prevent damage of contamination. Damaged or deteriorating materials shall not be used and shall be removed from the premises. Materials that become contaminated shall be disposed of in accordance with this specification and applicable regulations.

D. All enclosures shall be constructed of non-combustible materials. Rigid barriers, if applicable, shall have a minimum fire rating of 1 hour.

E. The use of chemicals to remove asbestos-containing mastics or adhesives <u>may</u> <u>not</u> be a terpene based solvent.

F. Ground Fault Circuit Interrupters shall be used on all equipment and temporary circuits.

G. Electrical extension cords shall be of appropriate rigidity and gauge for intended use and shall have an operative ground prong.

H. Electrical outlets and extension cords shall be provided by the Contractor for the purpose of air monitoring by the Owner or Owner's Representative. The Owner or Owner's Representative shall specify where the electrical outlets are needed, both inside and outside of the Regulated Area. Two electrical outlets shall be provided per designated area.

I. Contractor shall have on-site at all times a minimum of one 2A, 10 B:C (or larger) fire extinguisher. For large work areas, Contractor shall provide one fire extinguisher per 10,000 sq. ft, and locate fire extinguishers no further than 75 feet apart, starting from decontamination area entry way. The fire extinguishers shall have been inspected and certified as operative within the past 12 months.

J. The Contractor shall supply a fully stocked First Aid Kit in a visible place inside or directly outside (as is most convenient) of the clean room. The First Aid Kit shall remain on the job site at all times.

K. Adhesive tape shall be capable of sealing joints of adjacent sheet of polyethylene and for use in attachment of polyethylene sheet to finished or unfinished surfaces of similar materials and shall be capable of adhering under dry and wet conditions, including use of amended water.

L. Protective devices such as, but not limited to, disposable clothing, respirators, gloves, hard hats, etc. shall be used.

M. Encapsulant materials shall be the bridging and penetrating type and conform with the following characteristics:

    1. Encapsulants shall not be solvent-based or utilize a hydrocarbon in the liquid in which the solid parts of the encapsulant are suspended.

    2. Encapsulant shall not be flammable.

N. Spray Cement: Provide spray adhesive in aerosol cans which is specifically formulated to stick tenaciously to sheet polyethylene.

O. Polyethylene waste bags/containers shall be at least 6 mil's thick. All waste containers shall be leak-tight and bare appropriate labeling as required by this specification and/or applicable regulatory requirements.

2.01 TOOLS AND EQUIPMENT

A. Provide suitable tools for removal of asbestos-containing materials and encapsulations of substrate as required.

B. Provide sufficient number of HEPA-filtered vacuum cleaners equipped with pick-up adapters, steel floor wands, crevice tools, and carpet tools.

C. Airless sprayers capable of spraying amended water shall be provided in sufficient number to allow continuous uninterrupted work.

D. Asbestos filtration devices shall utilize high efficiency particulate air (HEPA) filtration systems.

E. Transportation equipment, as required, shall be suitable for loading, temporary storage, and unloading of contaminated waste without exposure to persons or property, and shall be quiet in motion if used within the building.

PART 3 - EXECUTION

3.00 PROHIBITED ACTIVITIES

A. The following work practices and engineering controls are prohibited and shall not be used under any circumstances:

1. High-speed abrasive disc saws that are not equipped at point of cut with HEPA filtered exhaust devices.

2. Compressed air used to removed asbestos, unless the compressed air is used in conjunction with an enclosed HEPA filtered ventilation system designed to capture the dust cloud created by the compressed air.

3. Dry sweeping, shoveling or other dry clean-up of dust and debris containing asbestos.

4. Employee rotation as a means of reducing employee exposure to asbestos.

B. Smoking, eating, drinking, applying cosmetics and chewing tobacco in regulated areas is prohibited. Hot work is prohibited unless authorized by Owner.

3.01 PERSONAL PROTECTION

A. Because there is no known safe level of exposure to asbestos, it is prudent to reduce worker's exposure to as low a level as possible. Proper respiratory protection is critical in minimizing exposure. No worker shall be exposed to levels greater than 0.01 f/cc over an 8 hour time weighted average as determined by the protection factor of the respirator worn and the work area fiber concentration. In any event, respirator selection shall comply with the minimum requirements required by DOSH per CCR Title 8, § 1529. The following table has been included to aid in determining the proper level of respiratory protection.

Airborne concentration of fibrous dust	Required respirator
Not in excess of 1 f/cc (10 X PEL), or otherwise as required independent of exposure pursuant to (h)(2)(iv)	Half-mask air purifying respirator other than a disposable respirator, equipped with high efficiency filters.
Not in excess of 5 f/cc (50 X PEL)	Full facepiece air-purifying respirator equipped with high efficiency filters.
Not in excess of 10 f/cc (100 X PEL)	Any powered air-purifying respirator equipped with high efficiency filters or any supplied air respirator operated in continuous flow mode.
Not in excess of 100 f/cc (1,000 X PEL)	Full facepiece supplied air respirator operated in pressure demand mode.
Greater than 100 f/cc (1,000 X PEL) or unknown concentration	Full facepiece supplied air respirator operated in pressure demand mode, equipped with an auxiliary positive pressure self-contained breathing apparatus.

B. The Contractor shall provide each employee with personally issued respirators equipped with high efficiency particulate filters. Respirators shall be approved by NIOSH to be worn in the designated work area and/or whenever a potential exposure to asbestos exists. A sufficient supply of filters shall be provided for replacement as required by the workers or applicable regulations. Disposable respirators shall not be used.

C. The Contractor shall provide medical examinations for all employees who may encounter an airborne fiber level of 0.1 f/cc or greater for an eight-hour time-weighted average. In the absence of specific airborne fiber data, provide medical examinations for all workers who will enter the work area and who will be required to ware respiratory protection for reason. Examinations shall meet OSHA requirements as set forth in CCR Title 8, § 1529.

D. The Contractor shall require that a respirator be worn by any person in any regulated work area. Respirators shall be worn at all times, regardless of activity until the area has been cleared for re-occupancy.

E. During encapsulation operations or usage of other organic base aerosols (e.g., spray glue, expanding foam), workers shall be provided with combination cartridges consisting of organic vapor and HEPA section.

F. The use of single-use, disposable, or quarter-face respirators for any purpose shall be prohibited.

G. Fit Testing: Provide initial fitting of respiratory protection during a respiratory protection course of training as per CCR Title 8, § 1529. Fit the type(s) of respirator(s) to be actually worn by each individual. Allow an individual to use only those respirators for which he/she has been trained and fitted.

H. Additional Protective Equipment:

1. Coveralls: Provide disposable full-body coveralls and disposable head covers, and require that they be worn by all workers in the work area. Provide a sufficient number for all required changes, for all workers in the work area.

2. Boots: Provide work boots with non-skid soles, for all workers. Provide boots at no cost to workers. Do not allow boots to be removed from the work area for any reason, after being contaminated with asbestos-containing material. Dispose of boots as asbestos contaminated waste at the end of the work.

3. Goggles: Provide eye protective (goggles) as required by OSHA for all workers involved in scraping, spraying, or any other activity which may potentially cause eye injury.

4. Gloves: Provide work gloves to all workers whose work may require protection of the hands and require that they be worn in the work area. Do not remove gloves from work area and dispose of as asbestos contaminated waste at the end of the work.

5. Respirators, disposable coveralls, head covers, and footwear covers shall be provided by the contractor for the Owner, Owner's Representative, Project Administrator, and other authorized representatives who may inspect the job site. Provide two (2) respirators and six (6) complete coveralls and, where applicable, six (6) respirator filter changes per day.

3.02 AIR MONITORING

A. Compliance Air Monitoring:
   1. Personal air monitoring "Exposure Monitoring". should be performed by the contractor as required to meet OSHA requirements as required by CCR Title 8, § 1529. Maintain an average airborne fiber counts within the regulated work area as follows:

Type of Work	Fiber Counts Standard
Work performed within a full negative pressure enclosure system.	0.5 fibers per cubic centimeter (f/cc) over an 8 hour Time Weighted Average (TWA)
Work performed in a regulated area but not in a full negative pressure enclosure system.	0.1 fibers per cubic centimeter (f/cc) over an 8 hour Time Weighted Average (TWA)
Work performed in open areas – glovebag removal, roof abatement, exterior siding removal, etc.	0.01 fibers per cubic centimeter (f/cc) over an 8 hour Time Weighted Average (TWA)

2.. The contractor shall maintain an average airborne fiber count inside of the abatement work area that does not exceed the standard specified above. If fiber counts rise above the standard for any sample taken, revise work procedures to lower fiber counts. If the time-weighted average (TWA) fiber count for any work shift or eight-hour period exceeds the standard, stop all work, **leave negative air system in operation** and notify Owner's Representative. Do not recommence work until authorization in given in writing by the Owner's Representative.

B. Environmental Air Monitoring:

1. At the Owner's option, the Owner's representative will conduct environmental monitoring as the Owner's Representative and as the Owner's Air Sampling Specialist throughout the course of the project. The purpose of environmental (area) air monitoring by the Owner's Representative will be to detect faults in the work area isolation.

2. If environmental air samples exceed 0.01 fibers/CC or are statistically higher than pre-abatement air samples, the Contractor shall:

   * Immediately and automatically stop all work
   • Evacuate affected areas
   • Regulate and isolate affected areas
   • Decontaminate affected areas in accordance with this specification.
   • Leave critical barriers in place until final visual and air clearance is given.
   • Perform all such required cleaning or decontamination at no additional cost to the Owner.

C. Clearance Air Monitoring:

1. Following visual clearance of work areas by the Owner's Representative, air sample will be taken to determine compliance with work area clearance standards. Work areas will be considered cleared when the following criterion are met:

	Air Sample Analysis - Type	Clearance Standard
a.	Transmission Electron Microscopy (TEM) **collected under aggressive conditions.**	less than 70 s/mm^2
b.	Phase Contrast Microscopy (PCM) **collected under aggressive conditions.**	less tan 0.01 f/cc
c.	No air samples required for open air work	N/A

2. The contractor may conduct his own air monitoring and laboratory testing if he elects to do so. The cost of such air monitoring and laboratory testing shall be at the contractors expense.

3.03 SAFETY PROCEDURES FOR POWER AND LIGHTING

A. The use of wet methods for removal, repair, encapsulation or cleaning procedures increases the potential for electrical shock when working around electrical panels, conduit, light fixtures, alarm systems, junction boxes, transformers, etc. In coordination with the Owner, de-energize as much electrical equipment as possible to prevent electrical shock to employees performing the work. The Contractor shall use the following precautions:

1. Use non-conductive tools and vacuum attachments.

2. Utilize "hot line" covers over energized cables and power lines when possible.

3. Ensure all electrical equipment in use is properly grounded before the job starts. Check outlets, wiring, extension cords and power pickups.

4. Avoid stringing wiring across floors. Elevate wiring if possible.

5. Ensure electrical outlets are tightly sealed and taped to avoid water spray.

6. Determine operating voltages of equipment and lines before working on or near energized parts.

7. Energized parts must be insulated or guarded from employee contact and other conductive objects. Extension cords must be three-wire type and connected to a Ground Fault Interrupter (GFI) circuit.

8. Lock or secure de-energized circuits at panel and post warning signs.

3.04 TEMPORARY FACILITIES

A. Use qualified tradesmen for installation of temporary services and facilities. Locate temporary services and facilities where they will serve the entire project adequately and result in minimum interference with the performance of the work and operations of the building.

B. Relocate, modify and extend services and facilities as required during the course of work so as to accommodate the entire work of the project. Provide new or used materials and equipment that are undamaged, clean and in serviceable condition. Provide only materials and equipment that are recognized as being suitable for the intended use, by compliance with appropriate standards.

1. Electrical
   Temporary electrical services (if required) shall comply with applicable NEMA, NECA and UL standards and governing regulations for materials and layout of temporary electric service. Provide receptacle outlets equipped with ground fault circuit interrupters, reset button and pilot light, for plug-in connection of power tools and equipment. Use only grounded extension cords; use "hard-service" cords where exposed to abrasion and traffic. Use single lengths or use waterproof connectors to connect separate lengths of electric cords, if single lengths will not reach areas of work.

2. Fire Protection
   Contractor shall have on-site at all times a minimum of one 2A, 10 B:C (or larger) fire extinguisher. For large work areas, Contractor shall provide one fire extinguisher per 10,000 sq. ft, and locate fire extinguishers no further than 75 feet apart, starting from decontamination area entry way. The fire extinguishers shall have been inspected and certified as operative within the past 12 months.

3. General
   At the completion of abatement work, clean all construction aids within the work area and/or wrap in one layer of 6 mil polyethylene sheet and seal before removal from the work area.

3.05 CONTROL WORK AREA ACCESS

A. The area where asbestos abatement work takes place in considered an asbestos contaminated area. The contaminated work area must be isolated from the balance of the building and decontaminated at the completion of the asbestos control work. Critical barriers shall be constructed by applying a double layer of 6 mil plastic sheeting, in an airtight fashion, over all penetrations into and out of the asbestos work area. Penetrations shall include, but are not limited to all doors, openings, holes, penetrations, windows, vents, and drains.

B. Permit Access to the work area only through the Decontamination Unit. All other means of access shall be closed off and sealed and warning signs displayed on the clean side of the sealed access.

C. Warning signs that demarcate the regulated area shall be posted in accordance with Title 8, CCR, Section 1529 (k) (6). Signs shall be posted at all work area entrance and on the public side of all work area barriers that may be accessible to otherwise unknowing persons. Warning signs shall be posted in locations that would allow any person to read the signs from any approach to the work area. The warning signs shall bear the following language:

DANGER
ASBESTOS
CANCER AND LUNG DISEASE HAZARD
AUTHORIZED PERSONNEL ONLY RESPIRATORS AND PROTECTION CLOTHING ARE REQUIRED IN THIS AREA

D. Visual Barrier: Where the work area is immediately adjacent to or within view of the public, provide a visual barrier of opaque polyethylene sheeting at least 4 mil in thickness so that the work procedures are not visible to building occupants. Where this visual barrier would block natural light, substitute frosted sheet plastic in locations approved by the Owner's Representative.

3.06 WORK AREA PREPARATION

A. Work Area

1. The abatement contractor must completely isolate the work area from other parts of the building so as to prevent asbestos-containing dust or debris from passing beyond the isolated/regulated area.

2. All movable items of furnishings, equipment, etc., shall be secured in a clean uncontaminated room and covered with plastic sheeting. All non-movable items to be left in place shall be covered with 6 mil. polyethylene sheeting and sealed with duct tape.

B. HVAC System

1. Where possible, disable Ventilating Systems or any other system bringing air into or out of the work area. Disable system by disconnecting wires, removing circuit breakers, by lockable switch or other positive means that will prevent accidental premature restarting of equipment.

2. Isolate the Heating Ventilating and Air Conditioning (HVAC) systems to prevent airflow into or out of the work area. Seal all openings to ducts, fans, louvers, plenums, etc. with two layers of 6 mil. polyethylene sheeting and duct tape. Shut-down and isolation of the HVAC system prior to the start of any asbestos disturbance work. Contractor shall repair any damage to duct work, grilles, dampers, louvers or other HVAC equipment at the completion of the work.

3. HVAC equipment openings which can not be properly sealed (due to forced air pressure) with polyethylene sheeting and duct tape. Will be hard sealed using 1/4 inch plywood or equivalent and mechanically sealed over air flow openings. Covered all hard sealed HVAC openings with two layers of 6 mil. polyethylene sheeting and duct tape

B. Clean Barriers

Impermeable dropcloths shall be placed on surfaces beneath all removal activity. All objects and surfecaes within the regulated area shall be covered with impermeable dropcloths or plastic sheeting which is secured by duct tape or an equivalent.

C. Pre-Cleaning

1. General (non-asbestos) Pre-Cleaning
   Perform a general pre-cleaning of the entire work area prior to and following work areas set-up and containment so that it is generally free of non-asbestos trash, plastic, cardboard, debris, and gross amounts dust, etc. The work area shall be as clean as possible to give abatement workers an unencumbered working environment and limit the amount of asbestos waste to be disposed of.

2. Asbestos Pre-Cleaning
   Pre-clean all surfaces that have been affected by asbestos dust, debris, fall-out or contamination. Pre-cleaning shall include HEPA vacuuming and wet wiping of all affected surfaces.

D. Class I Materials – TSI Elbows:

1. Glovebag method shall be used to remove TSI elbows as follows:

   a. Glovebags shall be made of 6 mil thick plastic and shall be seamless at the bottom.

   b. Glovebags used on elbows and other connections must be designed for that purpose and used without modifications.

   c. Work practices:

      - Place need tools in the glove bag.

      - Each glovebag shall be installed so that it completely covers the circumference of pipe or other structure where the work is to be performed. Glove bags shall be installed in accordance with the manufacturers instructions.

- Install and seal glovebags so that each bag creates its own leak-tight mini-containment around the asbestos section to be removed.

- Glovebags shall be smoke –tested for leaks and any leaks sealed prior to use.

- Glovebags may be used only once in its originally installed location - bags may not be moved or reused.

- Glovebags shall not be used on surfaces whose temperature exceeds 150oF

- Use a HEPA vacuum cleaner or other device to created negative pressure within the glovebag. HEPA vacuum cleaner shall run continually during the operation.

- Perform gross removal, detail cleaning, final cleaning, and encapsulation within the glovebag. The glovebag and surfaces within the glove bag shall be sufficiently clean so the no asbestos fibers are released when the glovebag is removed from the pipe.

- Following removal, detail cleaning, and encapsulation (and prior to disposal) the bag shall be collapsed by evacuating the air within the bag using a HEPA vacuum.

- Seal exposed insulation ends with approved canvas jacket and lagging materials to ensure that all exposed-raw asbestos is covered, sealed, and protected.

- At least two persons shall perform Class I glovebag removal operations.

E. Class II Materials

1. ACM mastic adhered air handler shall be removed as part of the dismantling/demolition of the ACM affected portions of the system. To the extent possible, ACM mastic shall be left intact during removal. Mastic removal shall be performed as follows:

   a. Critical barriers shall be constructed by applying a double layer of 6 mil plastic sheeting, in an airtight fashion, over all penetrations into the Work Area. Penetrations shall include, but are not limited to all entryways, windows, vents and drains. In addition to plastic sheeting, rigid cover plates may be required on HVAC supply and return vents or other HVAC air duct openings located within the Regulated Area.

   b. A layer of 6 mil plastic sheeting shall be installed directly beneath the work to be performed and shall be of sufficient dimensions to capture all debris generated as a result of the work.

   c. Wet methods shall be used to remove mastic as necessary. Adequately wet asbestos-containing materials during stripping, removal, and/or tooling to reduce fiber dispersal into the air. Accomplish wetting by a fine spray (mist) of amended water or removal encapsulant. Saturate material sufficiently to wet to the substrate without causing excess dripping. Spray material repeatedly during the work process to maintain a continuously wet condition.

   d. All debris and waste generated during removal shall be promptly cleaned-up and packaged in leak-tight containers.

   e. A sufficient number of HEPA filtered air machines shall be installed within the Work Area to maintain a pressure differential of **minus 0.03** column inches of water across the critical barriers at all times and a minimum of 4 air changes per hour. Air machines shall be placed in a configuration which allows thorough ventilation of the

Work Area and movement of contaminated air away from the breathing zone of abatement workers. Air machine exhaust shall be directed outside of buildings, where applicable, and away from occupied areas. Exact location(s) of air machine exhaust shall be arranged between Owner or Owner's Representative and Contractor prior to start of work.

3.07 PRESSURE DIFFERENTIAL SYSTEM

A. The contractor shall supply sufficient number of HEPA air filtration devises (AFD) units to continually maintain a pressure differential across all barriers of **minus 0.03** column inches of water. The contractor shall demonstrate that the negative air pressure standard can be maintained throughout project duration. No gross removal of asbestos materials may be initiated until negative air pressure is maintained for a period of eight hours.

B. A manometer equipped with a 24 hour disc recorder shall be installed to continuously monitor pressure differential inside of the asbestos work area. Air filtration machines shall remain in operation 24-hours a day until final clearance of the work area has been achieved.

C. No work involving the removal or disturbance of asbestos shall commence until the specified negative pressure level is met and maintained for a period of **one (1)** hours.

D. AFD(s) shall be operated and maintained in accordance with the manufacturers specifications and guidelines. Proper operation shall include appropriate use and maintenance of the two stage pre-filter and primary HEPA filtration system.

E. Negative Air exhaust: Locate exhaust unit(s) so that makeup air enters work area primarily through decontamination facilities and traverses work area as much as possible.

F. To the extent feasible, vent all AFD exhaust to the outside of building. The Contractor shall ensure that AFD exhaust does not spill directly into occupied areas.

G. Star operation of HEPA filtered AFD fan units before beginning work (before any asbestos containing material is disturbed). After abatement work has begun, run units continuously to maintain a constant negative pressure until decontamination of the work area is complete. Do not turn off units at the end of the work shift or when abatement operations temporarily stop. Do not shut down pressured differential air system during encapsulating procedures, unless authorized by the Consultant in writing.

H. Post Abatement: Prior to final air testing, remove pre-filter and wipe out inside lip of HEPA filtered fan unit.

I. When a final inspection and the results of final air tests indicate that the area has been decontaminated, exhaust units may be removed from the work area. Before removal from the work area, remove and properly dispose of pre-filter, and seal intake to the machine with 6 mil polyethylene to prevent environmental contamination from the filters.

J. Each filter shall be individually tested on site and certified to have an efficiency of not less than 99.97% when challenged with 0.3 µm dioctylphthalate (DOP) particles (or equivalent media). Testing shall be conducted in accordance with Military Standard Number 282 and Army Instructional Manual 136-300-175 A (or equivalent method). Each filter shall bear a UL586 label to indicate ability to perform under specified conditions. A copy of this section shall supplied to the test conductor.

3.08 ASBESTOS ABATEMENT

A. The Contractor shall:

1. Clearly mark and label all emergency exits located within the Regulated Area. Emergency exits shall be kept free of obstructions at all times. A razor knife or other cutting tool shall be posted in the vicinity of each emergency exit located within the Regulated Area and used to facilitate quick exit of the Work Area in an emergency situation.

2. Receive authorization from the Owner or Owner's Representative prior to initiating any asbestos removal activity. Owner or Owner's Representative shall conduct a pre-abatement inspection to ensure compliance with the Specification prior to authorizing start of any asbestos removal activities.

3. Inspect the integrity of all Regulated Area barriers and smoke test for leaks at the beginning of each shift. Any detected leaks shall be sealed prior to start of work.

4. Maintain a log of all personnel entering the Regulated Area. The Contractor shall not allow any person to enter the Regulated Area without prior approval of Owner or Owner's Representative. This includes Contractor employees newly assigned to the job site.

5. Provide authorized visitors with protective clothing, whenever they are required to enter the Regulated Area.

6. Ensure that each worker and authorized visitor shall follow the approved procedures established by the Contractor and the Owner.

7. Perform all work regardless of exposure using:

   a. HEPA vacuum cleaners
   b. wet methods
   c. Prompt clean-up and disposal of asbestos in leak-tight containers

8. Remove all existing asbestos-containing building materials as identified in the project scope of work as follows:

   a. Adequately wet asbestos- containing materials to be removed prior to stripping and/or tooling to reduce fiber dispersal into the air. Accomplish wetting by a fine spray (mist) of amended water or removal encapsulant.

   b. Saturate material sufficiently to wet to the substrate without causing excess dripping. Allow time for water or removal encapsulant to penetrate material thoroughly.

   c. Spray material repeatedly during the work process to maintain a continuously wet condition.

   d. Mist work area continuously with amended water whenever necessary to reduce airborne fiber levels.

   e. Waste shall be packaged prior to each break and at the end of each shift. If applicable, Contractor shall make arrangements with Owner to store ACM waste in a secured area until waste can be removed from the job site.

9. Ensure that the level of respiratory protection worn by Contractor's employees is adequate to protect the employees from exposure to airborne asbestos fibers above the Permissible Exposure Limits.

10. Ensure airborne asbestos fiber levels inside the Work Area do not exceed a ceiling limit of 1 fiber per cubic centimeter (f/cc), as determined by personal or area air sampling, regardless of the level of respiratory protection worn by Contractors employees. If this level is exceeded, Contractor shall take immediate action to reduce airborne fiber concentrations. If this level is exceeded for 2 consecutive shifts, the Contractor shall cease asbestos removal operations and perform necessary clean-up to reduce the airborne asbestos fiber level to below 0.2 f/cc as indicated by subsequent air samplings.

11. Conduct personal exposure monitoring and provide monitoring results within 24 hours after samples are collected to Owner or Owner's Representative.

12. Notify Owner or Owner's representative immediately in the event of a breach of the containment barrier or spill of ACM outside of the Regulated Area. Take protective measures to ensure occupants adjacent to the spill or breach are not exposed to asbestos.

13. In the event of a breach of the containment barrier or spill of ACM outside of the Regulated Area, immediately stop work, repair the breach and clean-up the spilled material using wet methods and HEPA vacuuming.

14. In the event that a non-work area becomes contaminated with asbestos, the Contractor shall immediately and automatically stop all work. If the contaminated area is inside the building and outside of critical barriers, the Contractor shall erect new critical barriers to isolate the affected area from the balance of the building. Erect Critical Barriers at the next existing structural isolation of the involved space (e.g. wall, ceiling, floor, etc.). Decontaminate the affected area in accordance with this specification. Leave critical barriers in place until final visual and air clearance is given.

15. That Contractor shall perform all required cleaning and/or decontamination at no additional cost to the Owner.

16. Shall not encapsulate abated surfaces until the work area has passed final inspection as determined by the Owner or Owner's Representative.

3.09 ENTERING THE WORK AREA

A. Worker decontamination area(s) shall be contiguous to the work area and shall be located location(s) where workers enter or exit the work area. The decontamination area(s) will be placed at the most strategic location(s) to allow easy access and usage for personnel and shall capable of withstanding crew usage without deterioration for the entire duration of the project; PPE; tools and equipment.

B. Decontamination area(s) shall be equipped with a clean water source for each crew member (a bucket of water for shared uses shall not be permitted); clean, dry towels, HEPA equipped vacuum cleaner; storage area for workers street clothing.

C. Contractor shall keep the change area clean and dry. Damp wipe and HEPA vacuum all surfaces throughout the shift and as needed and at the end each shift.

D. Require all workers to adhere to the following personal decontamination procedures whenever they leave the work area. Upon entering the asbestos abatement project, **remove street cloths** in the clean change room and put on a respirator and clean protective clothing. Before exiting the work area, the following procedures are required;

   1. Remove gross contamination from clothing via HEPA vacuum.

2. Deposit contaminated clothing in labeled disposal container.

3. Still wearing the respirator clean the outside of the respirator and body with clean water.

4. Remove respirator and wash face with clean water.

5. Remove filters from respirator, if breathing has becomes restricted or as often as the user feels is needful. Dispose of the filter elements in the container supplied for this purpose.

6. Wash and rinse the inside of the respirator.

9. Drying off and put on street cloths.

3.10 PACKAGING, LABELING, AND DISPOSAL OF ASBESTOS WASTE

A. It is the responsibility of the Contractor to comply with current Federal, State and local regulations concerning the waste handling, transportation, and disposal of ACM/ACCM.

B. Asbestos Waste Packaging

1. All ACM/ACCM and ACM/ACCM-contaminated materials, supplies, clothing, debris, etc. shall adequately wetted and be placed into leak-proof disposal containers.

2. Personal protective equipment (PPE) i.e. suites/coveralls, respirator cartridges, etc. shall be packaged, labeled, and disposed of with the asbestos removed during use of the PPE.

3. All friable and non-friable asbestos waste shall be thoroughly wetted with amended water and placed in a clear, 6 mil pre-labeled asbestos waste bag, goosenecked and sealed with duct tape. The bag shall then be placed into another 6 mil pre-labeled asbestos waste bag, also goosenecked and taped. Labeling shall conform to Title 8, CCR, Section 1529.

C. Labeling

1. Asbestos disposal containers to be labeled as follows:

a. All ACM containing waste shall be labeled:

DANGER

CONTAINS ASBESTOS FIBERS
AVOID CREATING DUST
CANCER AND LUNG DISEASE HAZARD

b. In addition, all Hazardous ACM waste shall include the following labels:

HAZARDOUS WASTE

STATE AND FEDERAL LAW
PROHIBITS IMPROPER DISPOSAL
IF FOUND, CONTACT THE NEAREST
POLICE OR PUBLIC SAFETY
AUTHORITY OR THE CALIFORNIA

DEPARTMENT OF
TOXIC SUBSTANCE CONTROL

Generator's Name
Address
Manifest No.

RQ, Asbestos, 9, NA2212, III

Cal/EPA & DOT Diamond Label

D. Disposal

1. Obtain any required permits and provide any required notices to the appropriate federal, state and local EPA agencies.

2. Waste manifest forms and/or waste shipment records shall be provided by the Contractor and include all information required by law.

3. Carefully load containerized waste on sealed trucks or other appropriate vehicles for transport. Exercise care before and during transport, to insure that no unauthorized persons have access to the material. Take bags from the work area directly to a sealed truck or dumpster

4. Asbestos-containing hazardous waste materials shall be transported in a completely enclosed shipping container, open truck beds with tarpoline covers are not allowed unless first loaded in sealed drums. Double bagged material may be transported on open trucks if they are loaded in sealed drums. Label drums with same warning labels as bags. Uncontaminated drums may be reused. Treat drums that have been contaminated as asbestos-containing waste and dispose of in accordance with this specification. If the waste shipment consists of non-friable, non-hazardous waste only, the materials may be transported to other than Class II waste sites.

5. Advise the sanitary landfill operator at least twenty-four hours in advance of transport of the quantity of friable and non-friable asbestos material to be delivered.

6. Waste water from wet stripping, shower room, and worker and equipment decontamination systems shall be filtered through a filtration treatment system capable of removing all particles 5 microns or greater in size before it is discharged into the sanitary sewer system.

7. At the burial site sealed plastic bags may be carefully dumped from the truck. If bags are broken or damaged leave bags of ACM waste in the truck and clean entire truck and contents using procedures set forth earlier in these documents.

8. Submit copies of all manifests, waste shipment records, and landfill receipts to Owner.

3.11 PROJECT DECONTAMINATION

A. Work of This Section includes the decontamination of all surfaces of the work area, all equipment in the Work Area and the air in the Work Area which may have been contaminated during abatement activities or which may previously have had elevated fiber counts due to friable asbestos-containing materials in the space.

1. Carry out a final cleaning of all surfaces within the abatement work area including items of tools, scaffolding and/or staging equipment. Use of damp cleaning methods and mopping, and/or a High Efficiency Particulate Air (HEPA) Filtered vacuum shall be used.

2. Do not perform dry dusting or dry sweeping.

3. Use each surface of a cleaning cloth one time only and then dispose of as contaminated waste.

4. Remove unneeded tools and equipment from the abatement work area via the decontamination unit. Ensure that all equipment leaving the work area has been decontaminated and wrapped in 4 mil plastic sheeting.

B. Following a visual inspection by the Owner's representative perform encapsulation of the abatement area. Abated substrate is to be encapsulated with a white pigmented bridging encapsulant. Apply encapsulant using an airless sprayer in accordance with the manufacturers recommendations. Apply encapsulant liberally over the abated surfaces sufficient to completely cover all areas affected by the work.

C. Maintain negative air pressure for 24 hours to allow negative air machines to clean air of airborne asbestos fibers. Before final air monitoring remove pre-filters and wipe out inside lip of HEPA filtered fan unit.

3.12 FINAL CLEARANCE

A. The Owners Representative shall conduct a final inspection of the work area upon completion of all abatement and clean-up tasks. The contractor shall notify the Owner or Owner's Representative at least 24 hours in advance of the project completion.

B. The Contractor shall not encapsulate abated surfaces until the work area has passed final inspection as determined by the Owner's representative. The Owner's Representative shall inspect work area surfaces for asbestos residue and debris. If any such debris, residue, dust or other matter is found repeat final cleaning and continue decontamination procedure at no additional cost to the owner.

C. Following successful completion of final inspection, the Contractor shall apply an encapsulating agent to all abated surfaces. The Owner's Representative will not conduct final air clearance sampling until the encapsulating agent is completely dry.

D. The Owner's Representative shall conduct aggressive final air clearance as specified and notify the Contractor of results in a timely fashion. In the event that air clearance in not achieved, the Contractor shall re-clean and re-encapsulate the work areas prior to final clearance retake. All costs and fees associated with re-cleaning and re-testing of the work area will be paid by the Contractor.

E. Upon successful completion of final air clearance, as determined by the Owner's Representative, the Contractor shall remove all remaining equipment and plastic sheeting from the work area and restore the abatement work areas and all affected areas to pre-abatement conditions. Any small quantities of residual material found upon removal of the plastic sheeting shall be removed with a HEPA filtered vacuum cleaner and local area protection. If significant quantities, as determined by the Owner's Representative, are found then the entire area affected shall be decontaminated as specified herein.

3.13 GENERAL WORK AREA CLEAN UP

A. Provide final cleaning of the Work at the time authorized by Owner's Representative. Employ experienced workers or professional cleaners for final cleaning. Clean each surface or unit of work to the condition expected from a normal, commercial building cleaning and maintenance program. Comply with the manufacturer's instructions for operations. Clean transparent material, affected by the work including mirrors and window/door glass, to a polished condition, removing substances which are noticeably vision-obscuring material. Replace broken glass and damaged transparent material.

B. Clean exposed hard-surfaced finishes affected by the work, to a dirt free condition, free of dust, stains, films and similar distracting substances. Except as otherwise indicated, avoid disturbance of natural weathering of exterior surfaces. Restore reflective surfaces to original reflective condition.

C. Clean plumbing fixtures affected by the work to a sanitary condition, free of stains including those resulting from water exposure.

D. Clean light fixtures and lamps which have been affected by the work so as to function with full efficiency. Replace lamps where inoperable, if applicable.

E. Clean project site of litter and foreign substances left during the course of the work. Sweep paved areas which have been affected by the work to a broom clean condition; remove stains, petrochemical spills and other foreign deposits left by the work.

F. Comply with safety standards and governing regulations for cleaning operations. Do not burn waste material at the site. Do not bury debris or excess material on the Owner's property. Do not discharge volatile or other harmful or dangerous material into drainage systems. Remove waste material from the site and dispose of in a lawful manner.

END OF SECTION

ATTACHMENT A2

ProTech
Consulting & Engineering

1208 MAIN STREET, REDWOOD CITY, CA 94063
P: (650) 569-4020 • F: (650) 569-4023 • E: info@protech-cal.com

Lead-Base & Lead-Containing Materials

Instructions to All Contractors/Bidders

For:
2nd Floor Mechanical Room

City of San Leandro Public Safety Building
835 E 14th Avenue
San Leandro, California

PART 1 - INTRODUCTION

1.0 GENERAL

A. This section deals with general requirements and procedures in conjunction with lead-containing materials as identified by ProTech Consulting & Engineering in our report titled Pre-Demolition/Renovation Asbestos & Lead Survey & Evaluation (rpt no. 313-MA14).

B. This specification delineates the basic safety and work requirements for the project. The provisions set forth in this specification will apply as minimum rules to be followed by the contractor, its employees, and any sub-contractors. The sub-contractors may elect to modify these provisions, but only to upgrade or increase the safety requirements, and only with concurrence of the Owner and/or Owner's representative.

C. Contractor must visit the work site to obtain first-hand knowledge of all existing conditions. Contractor is responsible for all unusual conditions or deviations from the specifications that exist at the time of their site examination, and such conditions must be reflected in the bid proposal. Contractor will not be given extra payments above the accepted bid prices for conditions that can be determined by examining the site and all Contract Documents prior to the submission of proposals.

1.1 SCOPE OF WORK

A. The work of this specification includes the removal, handling, packaging, and disposal of materials containing lead (Pb) as identified by ProTech Consulting & Engineering in our report titled Pre-Demolition/Renovation Asbestos & Lead Survey & Evaluation (rpt no. 313-MA14).

B. Each contractor who performs work at this site and impacts painted/coated surfaces shall:

1. Review lead-paint inspection data to assess if their particular work will impact lead-based paint (LBP) and/or lead-paint containing paint (LCP).
2. Contractor who will LBP and/or LCP shall ensure that all work is performed in accordance with applicable regulatory standards, this specification and other applicable contract documents.

C. Three (3) types of lead-related construction materials have been found to be present at this project as follows:

Types of Lead Materials			
Lead Level		Analysis Type	Standard
1.	**High Lead:** Lead-based paint/materials (LBP)	By XRF: By Paint Chip:	≥1 mg/cm² or greater ≥0.5 weight % or 5,000 mg/kg
2.	**Low Lead:** Lead containing material (LCM)	By XRF: By Paint Chip:	<1 mg/cm² <0.5 wt % of 5,000 mg/kg
3.	**No lead**: no lead detected by paint chip analysis	By XRF: By Paint Chip:	Requires paint chip confirmation No lead Detected or <0.006 wt %

C. For purposes of this project, any coated surfaces/components for which no data are available shall be assumed to contain detectable lead for Cal OSHA compliance purposes. The Contractor may, at Contractors sole expense perform addition paint testing and analysis by Atomic absorption (AA) spectroscopy to exclude building components form the special lead handling requirements of this specification. Deviations from this specification as a result of such testing must be submitted by the Contractor in writing. Deviations shall be subject to the review and approval of the Owner's Representative.

D. The Contractor shall obtain any necessary building or waste permits and notify local authorities if jurisdiction requires it.

1.2 CONTRACTOR QUALIFICATIONS

A. The work specified herein shall be performed by competent persons trained, knowledgeable and qualified in the state-of-the-art techniques of lead-related construction work, handling and subsequent cleaning of lead contaminated areas.

C. Project Supervisor – Competent Person:
The Contractor must provide a full-time General supervisor who is experienced in administration and supervision of lead-related construction projects. The supervisor shall possess current credentials as follows:

- Training required by Cal OSHA per Title 8 CCR 1532.1.
- Certification issued by the California Department oh Public Health

The Contractors' competent person shall be capable of preventing, elimination and identifying existing lead hazards associated with the project. The supervisor shall have a work knowledge of, and the ability to read, understand and correctly interpret all the project documents and applicable regulatory standards. The Supervisor shall be trained, as required by Cal OSHA, and be CDPH certified. In addition, the Supervisor shall demonstrate that he/she has a minimum of two (2) years on-the-job experience.

C. Training – Lead Worker:
All workers assigned to tasks involving lead-related work shall possess current credentials as follows:

- Training required by Cal OSHA per Title 8 CCR 1532.1.
- Certification issued by the California Department oh Public Health

D. Licensing, Certification:
- The Contractor must hold a current, valid license issued by the California State Contractors Licensing Board.

D. Reporting Unusual Events:
When an event of unusual and significant nature occurs at the site (examples: failure of the containment system, injury, environmental exposure, etc.), prepare and submit a special report listing chain of events, persons participating, response by Contractor's personnel, evaluation of results or effects, and similar pertinent information. When such events are known or predictable in advance, advise Owner in advance at earliest possible date. Except as otherwise indicated, submit special reports directly to Owner within one day of occurrence requiring special report, with copy to Owner's Representative and others affected by occurrence.

E. Reporting Accidents:
Prepare and submit reports of significant accidents, at site and anywhere else work is in progress. Record and document data and actions; comply with industry standards. For this purpose, a significant accident is defined to include events where personal injury is sustained, or property loss of substance is sustained, or where the event posed a significant threat of loss or personal injury.

F. Daily Logs and Journals:
During the work, Contractor shall maintain a daily log which will be kept at the job site. Items to be included in the daily log shall include but are not limited to the following:

1. Meetings; purpose, attendees, discussions, items of resolution (brief)

2. Visitations; authorized and unauthorized

3. Sign-in sheets of all personnel entering and leaving the work area

5. Personal air monitoring results – submit within 24 hours of sample collection

1.3 PRE-JOB SUBMITTALS

Before the start of work, submit the following to the Owner's Representative for review. No work shall begin until these submittals have been approved by the Owner or Owner's representative.

A. Experience:
Provide the name and location of at least three lead projects of comparable size and complexity with this work. Provide the name and telephone number of contact person at previous projects. Provide the final air monitoring decontamination fiber levels achieved.

B. Written Compliance program.
Prior to commencement of the job the Contractor shall establish and implement a written compliance program to achieve compliance with Cal OSHA requirements and HUD guidelines. The written programs shall be available at the worksite for examination and copying. The written plan shall include at least the following:

1. A description of each activity in which lead is emitted; e.g. equipment used, material involved, controls in place, crew size, employee job responsibilities, operating procedures and maintenance practices;

2. A description of the specific means that will be employed to achieve compliance and, where engineering controls are required engineering plans and studies used to determine methods selected for controlling exposure to lead;

3. A report of the technology considered in meeting the PEL;

4. Air monitoring data which documents the source of lead emissions;

5. A detailed schedule;

6. A work practice program which includes items required by Cal OSHA and prescribed by HUD.

7. An administrative control schedule as required by Cal OSHA

8. A description of arrangements made among contractors on multi-contractor sites with respect to informing affected employees of potential exposure to lead and of regulated areas.

9. Other relevant information.

10. Schedule of frequent and regular inspections of job sites, regulated areas, materials, and equipment to be made by a supervisor.

11. Include in the plan specific procedures for decontamination and work area isolation and set-up. Provide diagrams showing negative air placement (if applicable), decontamination locations, staging areas and waste bag-out areas. Note that nothing in-this specification should impede safe exiting or providing of adequate medical attention in the event of an emergency.

C. Waste Transport/Active Asbestos Waste Site
Submit copies of proof of all EPA, DOT, and DHS, licenses, registrations, and certifications for all hazardous waste haulers and active lead waste sites intended for use on this project.

D. Worker Documentation:
Provide current documentation for each qualified competent Person and workers who will be assigned to the project. Submit documentation as follows:

1. Cal OSHA and CDPH Training Certification.
2. Biological - blood lead test for all Workers prior to project commencement.
3. Physician medical release for each Worker – written approval to don respiratory protection without restriction.
3. Respiratory fit test documentation.

E. Notifications:
Submit copies of any required notifications sent to federal, state and/or local agencies as required by applicable local, state and federal regulations.

F. Permits:
Submit copies of any required permits required by state and/or local regulations.

G. Licenses:
Submit copies of: valid California State Contractors License, and Local licenses and permits necessary to carry out the work of this contract.

H. Material Safety Data Sheets:
Submit the Material Safety Data Sheet, or equivalent, in accordance with the OSHA Hazard Communication Standard (29 CFR 1910.1200) for applicable material proposed for use on the work including but not limited to encapsulant, surfactant, spray adhesive etc. Include a separate attachment for each sheet indicating the specific worker protective equipment proposed for use with the material indicated.

1.4 PUBLIC SAFETY AND PUBLIC CONVENIENCE

A. The Contractor(s) shall take all necessary measures to ensure the safety of the general public and adjacent residents throughout the course of this project. The Contractor shall take adequate measures to make the building or work areas inaccessible to the public (such as temporary fencing if necessary).

B. The Contractor shall ensure that lead (in any form) does not contaminate the project site or adjacent property during this demolition process.

1.5 REGULATIONS

A. Contractors are required to follow all Federal, State, and local standards that regulate lead-related construction work and lead disposal including but not limited to: the California Department of Public Health, U.S. Environmental Protection Agency (EPA), the California Department of Occupational Safety and Health (Cal-OSHA), and any other applicable federal, state and local government regulations pertaining to lead containing materials, lead-based paints (LBP) and other lead-containing wastes.

B. The Contractor and all subcontractors shall ensure that each employee who will or may handle, impact, or otherwise disturb lead or encounter lead contaminated areas:
   1 Receive proper and sufficient Cal OSHA and CDPH compliant training.
   2 Receive proper and sufficient personal protection equipment

C. Lead-based paint and lead-containing paint materials and waste shall be handled in accordance with applicable laws and regulation. In the event of conflict, the more stringent requirement will apply. The Contractor(s) is alerted to, and shall become familiar with all laws and regulations regarding the generation, management, handling, characterization and disposal of lead (Hazards materials) including:

   1 Environmental Protection Agency National Ambient Air Quality
   2 Standards, as applicable (40 CFR 61)
   3 Occupational Safety and Health Administration (inclusive of OSHA 29 CFR 1919.134 and 1926.62)
   4 California Department of Occupational Safety and Health (inclusive of Cal/OSHA 8 CCR 1532.1, 3203, 5155, 5194, 5216)
   5 California Environmental Protection Agency (Cal-EPA), (22 CCR Section 66000, et seq.)
   6 California Department of Public Health (17 CCR Sections 3500061000)
   7 Resources Conservation and Recovery Act (42 U.S.C. Section 6901 et seq., and regulations 40CFR part 260 et seq.)
   8 California Health and Safety Code (Division 20 and regulations, and 22 CCR section 66000 et seq.).
   9 Resource Conservation and Recovery Act

10 Federal Occupational Safety and Health Administration (Fed/OSHA) (29CFR 1910.134 and 1926.62)
11 Federal Environmental Protection Agency (Fed/EPA) (40 CFR50 et seq.) Federal Department of Transportation (49 CFR)
12 Other applicable federal, state, and local governmental regulations pertaining to lead hazards and lead waste.

PART 2 - WORKER PROTECTION

2.0 DESCRIPTION

A. This program is essential in minimizing risk of lead exposure to workers. The Contractor will minimize exposure to hazards through the use of engineering controls and good work practices. Respirators will not to be used as the primary or sole means of protection. Work practices and engineering controls will be implemented to reduce employee exposure to the greatest extent possible. Wetting the materials thoroughly will be the major engineering control. A negative air machine is running to help eliminate some of the air-borne lead materials. All debris will be cleaned up promptly.

B. Worker Protection will include respirator protection. protective clothing, gloves, and equipment, housekeeping, hygiene practices and medical surveillance.

C. Inhalation of lead dust and fumes, and ingestion resulting from contact with lead-contaminated food, cigarettes, clothing, or other objects, are the major routes of worker exposure to lead. Once absorbed, lead accumulates in the blood, soft tissues, and bones, with the highest accumulation initially in the liver and kidneys. Lead is stored in the bones for decades, and may cause toxic effects in adults as it is slowly released overtime. Chronic overexposure to lead results in damage to the kidneys, the central nervous system, the reproductive system, and the blood-forming organs. Adverse health effects in adults include: abdominal discomfort, anemia, colic, constipation, excessive tiredness, fine tremors, headache, high blood pressure , irritability, loss of appetite, muscle joint pain, sexual impotence, pigmentation on the gums, and others.

D. There are two primary routes of lead poisoning in occupation settings, they are;

1. Ingestion:
   Ingestion generally occurs by normal hand-to-mouth activity (such as eating) after hands have been in contact with lead dust or contaminated items.

2. Inhalation:
   Inhalation, or breathing of airborne lead generally occurs when lead coated surfaces or lead contaminated dust is disturbed and lead dust is released into the working environment.

E. Employers of employees who perform lead-related work are responsible for the development and implementation of a worker protection program in accordance with Title 8 CCR 1532.1. This program is essential in minimizing the worker risk of lead exposure.

F. The most effective way to protect workers is to minimize exposure through the use of engineering controls and good work practices. It is OSHA policy that respirators are not to be used as the sole means of protection when engineering controls are feasible to reduce employee exposure.

G. At a minimum, the following elements should be included in the employer's worker protection program for employees exposed to lead.

- Hazard Determination
- Worker Protection including: respirator protection, protective clothing and equipment, housekeeping, hygiene practices and medical surveillance.
- Worker Training and record keeping

2.1 WORKER EXPOSURE

A. The Contractor will limit airborne exposure to lead dusts in the workplace to the greatest extent possible with engineering controls and/or respiratory protection.

B. Initial monitoring will be performed that is representative of each affected employees 8-hour time weighted average (TWA) exposure to lead. The contractor shall collect full-shift personal air samples for affected employees that is representative of daily exposure to lead. Personal exposure monitoring shall include one sample for each job classification in each work area. Employee lead exposures shall be monitored by the Contractor in accordance with Cal OSHA standard Title 8 CCR 1532.1.

C. If the initial monitoring shows exposure levels to be below the Action Level of 30 $\mu g/m^3$, no further exposure assessment is required unless there is a change of equipment, process, control methods, personnel, or a new task is initiated.

D. If the action level (AL) of 30 micrograms per cubic meter of air (µg/m3) is exceeded, without regard to respiratory protection, compliance activities with Title 8 CCR 1532.1 will be implemented. Exposures above the permissible exposure limit (PEL) of 50 µg/m3 will not be permitted. Proper respiratory protection will be enforced to maintain exposure limits below the PEL (see respiratory protection).

2.2 MONITORING

A. Personal monitoring

1. Personal air monitoring shall be the responsibility of the Contractor. The contractor shall collect full-shift personal air samples representative of each affected employee and each lead-related work task. Initial monitoring will be performed that is representative of each affected employees 8-hour time weighted average (TWA) exposure to lead. Daily personal monitoring will be performed on a minimum of 20% of the employees for each lead-related work activity. The Contractor shall post personal air monitoring results on the job site within 48 hours from collection. Employees will be given the opportunity to observe monitoring results.

2. If the initial monitoring shows exposure levels to be below the Action Level of 30 $\mu g/m^3$ for a particular activity, the Contractor shall implement a periodic monitoring schedule (for that particular activity).

3. Additional monitoring is required if there is a change of equipment, process, control methods, personnel, or a new task is initiated.

B. Environmental Monitoring

1. Air sampling may be conducted in areas adjacent to lead related work activities to document and monitor the effectiveness of engineering control procedures. Air samples shall be collected at the perimeter (outside) of active lead-related construction work. Perimeter monitoring will be performed to detect contamination outside of the regulated work area as a result of inadequate engineering controls and/or work practices. Samples may be collected as needed immediately adjacent to the lead abatement work in locations most vulnerable to contamination migration. Environmental air sampling, when conducted will be performed by the Owner's Representative.

2. If the environmental monitoring yields results in excess of 30 micrograms per cubic meter of air (ug/m3) or background levels (which ever is greater) as established by pre-construction monitoring, the Contractor shall extend the regulated area to include all affected areas. The Contractor shall contaminate all areas until HUD clearance criterion can be established.

2.3 RESPIRATORY PROTECTION

A. Until an exposure assessment is made by the Contractor, all employee performing lead-related trigger activities shall be treated as if exposed above the personal exposure limit (PEL, 50 mg/m^3) based on the following table:

Trigger Activity	Anticipated Exposure ($\mu m/m^3$)
• Manual demolition • Manual scraping and sanding • Heat gun use • Use of power tools with dust collection systems • Spray painting with lead paint • Any other activity that the employer has any reason to believe that an employee may be exposed in excess of the PEL.	Greater than 50

• Using lead containing mortar • Lead burning • Rivet busting • Power tool cleaning without dust collection system • Clean-up of dry abrasive blast residue.	Greater than 500
• Abrasive blasting • Welding • Cutting • Torch burning.	Greater than 2500

B. The following respiratory protection is required for exposure to lead aerosols:

Anticipated Exposure	Required Respirator
Greater than 50 $\mu m/m^3$	Half-mask, air purifying
Greater than 500 $\mu m/m^3$	Full-face, air purifying, or Tight fitting PAPR, or Supplied air, contiguous flow
Greater than 2500 $\mu m/m^3$	Supplied air, pressure demand

C. All respirators are required to be equipped with high efficient particulate air (HEPA) filters.

D. When chemicals and/or other restorable hazards are introduced into the project appropriate respiratory protection and other personal protective equipment will be utilized in accordance with manufacture and MSDS recommendations.

E. Respirators (NIOSH-approved) will be provided by Contractor when such equipment is deemed necessary to protect the health of the employee. Contractor shall provide respiratory protection devices which are applicable and suitable for the purpose intended. Contractor shall be responsible for the establishment and maintenance of the respiratory program.

F. Employees are required to wear a respirator when employee exposure to lead exceeds the PEL. The employer will provide a respirator to the employee at no cost. The employer will provide respirator training to all employees who wear a respirator. Medical exams per Title 8 CCR 1532.1 and CCR Subchapter 7. General Industry Safety Orders § 5144 will be provided at no cost to all employees who wear a respirator. The employee will be fit tested at initial assignment and at every 6 months, or after weight gain/loss of 15 pounds or more, growing/shaving mustache, facial deformation-dental work. The employer shall institute a written respiratory protection program.

G. For the safe use of any respirator, it is essential that the user be properly instructed in its operation and maintenance. Both supervisors and employees of Contractor, and its sub-contractors, shall be so instructed. Employees of Contractor, and its sub-contractors, shall be instructed and trained in the proper selection and use of respirators and their limitations. The Contractor employee, and those of sub-contractors, shall use the provided respirator in accordance with instructions and training received. All training shall be documented with records retained in the employee's training files.

H. A written Respiratory Protection Program which complies with 29 CFR, part 1910, section 134, and California Code of Regulations (CCR) Title 8 CCR, sections 1532.1 will be maintained and kept on site throughout the project.

2.4 PERSONAL PROTECTIVE EQUIPMENT

A. Until an exposure assessment is performed by the Contractor, the Contractor shall implement employee protective measures as described in Title 8 CCR 1532.1:

1. Appropriate respiratory protection
2. Appropriate personal protective clothing and equipment
3. Appropriate change areas
4. Appropriate hand wash facilities
5. Biological monitoring (blood testing)
6. Appropriate training

B. The Contractor will provide protective clothing to all employees potentially exposed to lead dusts during the work shift. Clean protective clothing will be provided to the employee on a daily basis at no cost to the employee. Lead contaminated work clothing will be removed in change rooms before lunch and at the end of the work shift. Soiled work clothes will be stored in closed, labeled containers. Waste work clothes will be sampled for lead content prior to disposal.

C. Protective goggles, gloves, hard-hats , disposable clothing, etc. will be provided to all employees potentially exposed to lead dusts or debris during the work shift.

2.5 MEDICAL MONITORING

A. Blood Testing:

1. Contractor(s) shall implement a biological monitoring program for this project. The program will consisting of biological monitoring (blood testing) and analysis for lead and zinc protoporphyrin levels.

2. Employee's will be tested immediately be the start of the project, no employees shall be assigned to this project whose blood lead is at or above 40 µg/dl.

B. Physical Examination:

1. Contractor(s) whose employees who are required to don respiratory protection shall implement a Medical Surveillance Program. Employees must be cleared by the examining physician to wear a respirator and protective clothing while performing their project duties.

2. All personnel on-site shall have successfully completed a pre-placement or periodic medical examination in accordance with established Contractor policies and procedures, and consistent with the provisions of the OSHA respiratory standard 29 CFR 1910.134 nd Cal OSHA lead standard Title 8, 1532.1.

2.6 EMPLOYEE INFORMATION AND TRAINING

The Contractor will provide an information and training program, at least annually, to all employees potentially exposed to lead. This program will inform employees of the health hazards associated with lead exposure, the contents of Tile 8 Section 1532.1, the proper selection, fitting and use of respirators, the medical surveillance program, the employees access to records, engineering controls and work practices associated with the employees job assignment

2.7 RECORD KEEPING

The Contractor will keep records of all exposure monitoring for airborne lead. The records shall include the following information for each sample: date collected, sample number, duration, result, analytical method, activity represented, employees names and SS#'s represented, type of respiratory protection used.

PART 3 - EXECUTION

3.1 REGULATED AREAS

A. The Contractor will establish a regulated area where lead may be impacted and/or disturbed. Only authorized personnel may enter the regulated area. All persons entering the regulated area will be supplied with and required to wear appropriate personal protective equipment and respiratory protection.

B. Warning signs will be posted at the entrance to each regulated area. The sign will read as follows:

WARNING
LEAD WORK AREA
POISON
NO SMOKING OR EATING
AUTHORIZED PERSONNEL ONLY

3.2 CAL OSHA COMPLAINCE

A. All Contractors/employers whose employees may impact or perform trigger activity associated with lead-based paint or lead containing materials shall comply with the requirements, standards and work practices codified by Cal OSHA lead construction standard per CCR Title 8 § 1532.1. Each Contractor/employer shall:

1. Make an assessment as to the applicability of the Cal OSHA lead construction standard relative their specific work. Cal OSHA standards are designed to regulate and enforce on-the-job worker safety. Employers are required by law to ensure that employees are <u>not</u> exposed to airborne lead levels which exceed the permissible exposure limit (PEL). The standard requires worker exposure monitoring, medical surveillance, training, special work practices, etc.

2. Contractors/employers whose employees will be working on this project are required to assess lead exposure risk to their employees (as per Cal OSHA lead standard CCR Title 8 § 1532.1). In making this evaluation, contractors should:

   a. Review all lead related documents and reports.

   b. Become familiar and comply with Cal OSHA and other applicable lead regulations.

   c. Make an assessment to determine potential worker exposure relative to the various lead-related construction work to be performed.

d. Collect supplemental data/samples if necessary.

e. Assess and monitor worker lead exposure levels during the performance of lead trigger tasks or other activities that may potentially expose workers to levels above the Cal OSHA permissible exposure level.

f. Determine compliance requirement relative to DOSH notification rules.

3. Cal OSHA requires compliance with their lead construction regulation when:

a. The permissible exposure limit (PEL) will or may be exceeded. The PEL is an exposure to airborne lead dust of 50 micrograms of lead per cubic meter of air (50 $\mu g/m^3$) over an 8 hour time weighted average (TWA).

b. Employees perform "trigger activities" that impact a material containing lead in any detectable amount. Cal OSHA mandates that an employer assume the PEL will be exceeded when his/her employees conduct "trigger activities" involving lead.

	Trigger Activity
Level 1	• Manual demolition • Manual scraping and sanding • Heat gun use • Use of power tools with dust collection systems • Spray painting with lead paint • Any other activity that the employer has any reason to believe that an employee may be exposed in excess of the PEL.
Level 2	• Using lead containing mortar • Lead burning • Rivet busting • Power tool cleaning without dust collection system • Clean-up of dry abrasive blast residue.
Level 3	• Abrasive blasting • Welding • Cutting • Torch burning.

4. If Cal OSHA lead compliance is required, contractor(s) shall adhere with the following requirements:

a. Construct Project Hygiene Facilities and implement decontamination policies in accordance with the Cal OSHA lead construction standard. Worker decontamination station shall be provided at all locations where worker enter or exit the work area. The decon station shall be placed at the most strategic location to allow easy worker access. The Contractor must install a filtering system for removing contaminants from the drained water. The system must have as a two stage cascading filtering system capable of filtering down to 5 µm or smaller. Filtered water may then be disposed of into the sanitary sewer. The Contractor shall maintain a supply of filters for the filtering system. The filters will be changed as often as needed to prevent the system from clogging.

b. Determine if any employee may be exposed to lead at or above the action level (30 mg/m^3). This assessment is made by taking at least one full shift personal air sample for each job classification.

c. Until an exposure assessment is made, any employee performing a trigger activity, shall be treated as if exposed above the personal exposure limit (PEL, 50 mg/m^3).

d. Until an exposure assessment is performed, the employer must implement employee protective measures per Cal OSHA - CCR Title 8 § 1532.1 including:

- Appropriate respiratory protection
- Appropriate personal protective clothing and equipment
- Appropriate change areas
- Appropriate hand wash facilities
- Biological monitoring (blood testing)
- Appropriate training

e. Implement engineering controls and work practice controls, including administrative controls, to reduce and maintain employee exposure to lead at or below the PEL or to the lowest feasible level. If engineering controls can not reduce exposures below the PEL, supplement controls with appropriate respiratory protection.

f. Prior to the job, establish and implement a written compliance program to ensure that no employee is exposed to lead above the PEL. The program must address the specific issues outlined in Cal OSHA - CCR Title 8 § 1532.1.

g. Respirator use is required when:

- Employee exposure exceeds the PEL
- Employee requests it
- During the initial exposure assessment

h. If required, implement a respiratory protection program addressing the specific elements outlined in the OSHA respiratory protection standard (CCR Subchapter 7. General Industry Safety Orders § 5144).

i. If required, implement a medical surveillance program for employees exposed on any day to lead at or above the action level. The medical surveillance program must address the specific elements in the standard including (but not limited to):

- Initial medical surveillance consisting of biological monitoring (blood testing) and analysis for lead and zinc protoporphyrin levels.
- Employee notification of blood test results.
- Medical examinations and consultation under certain circumstances.

j. Post appropriate warning signs (as prescribed in the standard) in each regulated area or work area where an employee's exposure to lead is above the PEL.

k. The employer must establish and maintain an accurate record of:

- Exposure assessment data
- Medical surveillance data
- Observation procedures

l. Contractors/Employers whose employees disturbs more that 100 sq ft of lead-based paint (LBP) are required to submit written notification to Cal OHSA (per Health and Safety Code, Title 17 CCR Section 36000 (c)). The Cal OSHA LBP notification rule under requires 24-hour advance notice prior to LBP disturbance.

3.3 SITE PROTECTIVE CONTROLS

A. Where containment is required to prevent migration of lead paint contaminants to another property, containment barriers shall be at least as effective at protecting human health and the environment as those contained in HUD's Guideline for the Evaluation and Control of Lead-Based Paint Hazards in Housing and Lead Paint Removal Guide published by the Steel Structure Painting Council.

C. General Dust Controls: Implement engineering controls as necessary to reduce airborne exposures to lead to the greatest extent possible. Engineering controls shall include but not necessarily be limited to:

1. Misting of the work area as necessary to eliminate visible emissions beyond the regulated area during active demolition.

2. Collect all lead debris and lead contaminated waste for proper waste profiling, packaging, labeling, and disposal.

3. Power tools used for lead-paint removal (if performed) shall be equipped with attached HEPA vacuums to collect lead dust emissions generated by the power tool(s).

4. Install worker decontamination facilities immediately adjacent to the work area entry/exit.

5. If any of the containment systems are damaged in any way, repairs will be made immediately.

3.4 METHODS OF COMPLIANCE

A. The following work practices shall be used to reduce employee and environmental exposure during any/all work were exposure to lead could potentially exceed Cal OSHA's action level:

1) Wet removal of lead-containing materials.

2) Routine clean-up of loose lead containing debris.

3) Use of vacuum cleaners and Local exhaust ventilation machines equipped with high efficiency particulate air (HEPA) filters.

4) A containment system to control disbursement of leaded dust and debris.

3.5 CONTAMINATION

Should lead be detected outside of the regulated work area at or above 30 mg/m^3 or in excess of baseline air sample or dust wipe levels, the area will be considered contaminated. The areas outside the work area will be HEPA vacuumed and wet wiped with a trisodium phosphate solution until clearance or baseline levels are achieved.

3.6 PERSONELL AND EQUIPMENT DECONTAMINATION PROCEDURES

A. When exiting the lead regulated the work area, workers will remove gross contamination with a HEPA vacuum and dispose of work garments in a provided waste container dedicated for

the disposal of lead-contaminated items. Workers will then proceed to a decontamination station equipped, at a minimum with running water, soap and disposable towels will be provided. All personnel exposed or potentially exposed to lead will be required to use the wash station at the beginning of each break, before lunch, and at the end of each shift to clean hands and face.

B. All tools, equipment, and non-disposable items used inside the work area shall be completely decontaminated before removal from the regulated area. Decontamination shall be accomplished by HEPA vacuum (when possible) and wet wiping with a mild detergent and water solution.

C. 3-Stage Decontamination Facility shall be provided IF workers are shown to be exposed at levels exceeding the permissible exposure limit.

1. A 3-stage decontamination facility equipped with a shower unit (equipped with hot and cold running water) shall be constructed for any/all work where lead exposures are expected to exceed the PEL.

2. The decontamination facility and decontamination procedures may be down-graded to a hand wash facility once (if) personal air monitoring data show all work activities generate lead exposures below the PEL.

3. Worker decontamination station shall be provided at all locations where worker enter or exit the work area. The decon station shall be placed at the most strategic location to allow easy worker access

   a. The 3-satge decontamination facility shall consist of the following

      - Clean Room: The clean room will be sized to accommodate the size of the work crew. If lockers are not available storage of the workers personal equipment and street clothing, the contractor may use plastic bags. The contractor must keep the change area clean and dry. Do not allow shower overflow water in the change room. Damp wipe all surfaces twice after each shift with a disinfectant.

      - Shower Room: The shower room shall be constructed with a minimum of a single shower or what ever is adequate for the size of the work crew. Each shower head shall be supplied with hot and cold water. The shower shall be constructed to prevent leakage.

        - Install a totally submersible waterproof sump pump with a integral float switch inside the collection water pan. Provide sump pump size to pump twice the flow capacity of all showers or hoses supplying the water to the sump. Install a sump capable of pumping debris, sand, plaster or other materials which may wash off during decontamination procedures.

        - The contractor must install a filtering system for removing contaminants from the drained water. The system must have as a two stage cascading filtering system capable of filtering down to **5 µm or smaller.** Filtered water may then be disposed of into the sanitary sewer.

        - The contractor shall maintain a supply of filters for the filtering system. The filters will be changed as often as needed to prevent the system from clogging.

- Equipment/Dirty Room: The equipment room will be used for storage of tools and equipment. Workers will remove dirty protective clothing in this space.

4. Each room of the decontamination unit will shall be constructed of materials that are leak-tight and air-tight. Each room shall be connected in succession separated by 6 mil polyethylene air locks. Access between any two rooms in the decontamination unit will be through air locks with at least 3 feet separating each curtained door way.

5. Require all workers to adhere to the following personal decontamination procedures whenever they leave the work area. Upon entering the asbestos abatement project, **remove street cloths** in the clean change room and put on a respirator and clean protective clothing before entering the equipment room or work area. Before exiting the work area, the following procedures are required;

   a. Remove gross contamination from clothing with a HEPA vacuum.

   b. Proceed to the equipment room and remove all clothing except the respirator.

   c. Deposit contaminated clothing in labeled disposal container.

   d. Still wearing the respirator, proceed to the shower and clean the outside of the respirator with soap and water while showering.

   e. Remove respirator.

   f. Thoroughly wash and shampoo hair and body.

   g. Remove filters from respirator, if breathing has becomes restricted or as often as the user feels is needful. Dispose of the filter elements in the container supplied for this purpose.

   h. Wash and rinse the inside of the respirator.

   i. Following showering and drying off, proceed directly to the clean change room and put on street cloths

   j. Contaminated footwear shall be stored in the equipment room or disposed of as contaminated waste or cleaned thoroughly inside and out using soap and water before removing from the shower area.

3.7 DAILY AND FINAL CELANING OF LEAD WORK AREAS

A. Contractor shall ensure that lead work areas undergo daily and final cleaning.

B. Contractor shall conduct work area cleaning as follows:

1. Work area cleaning shall begin with a thorough HEPA vacuuming of all surfaces, starting at the ceilings, proceeding down the walls and including window, doors and door trim and floor. The floor shall be vacuumed last, beginning at the farthest corners from the entrance to the work area.

2. Contractor shall next wash or mop the same surfaces with a tri- sodium phosphate (TSP) detergent solution (five percent) or other equally effective cleaning agent and allow

surfaces to dry.

3. After TSP wash and dry cycle, HEPA vacuuming shall again be performed as noted above

3.8 PROJECT CLEARANCE

A. The project shall not be deemed complete until the Contractor performs a final cleaning of the work area(s). Completion of the project will be determined by the Owner's representative during a visual inspection of the work area(s).

B. Completion of the project may also be determined by the results of post clean dust and/or soil samples. At the Owners option, final wet wipe and/or soil samples may be collected and analyzed for lead content to establish conformity to clearance criteria. To be deemed acceptable, wipe samples must pass the clearance standards established by the U.S. EPA and CDPH.

C. Should Contractor fail a visual inspection or fail to pass the testing criteria, Contractor shall reclean areas as directed by the Owner's representative. Contractor shall perform all recleaning at Contractors own expense.

3.9 WASTE CHARACTERIZATION, DISPOSAL AND MANIFESTING PROCEOURES

A. All lead and lead-contaminated debris shall be collected and kept separate from all/any non-lead waste. Laboratory costs associated with analyses required for disposal, will be at the Contractor's expense. Lead-waste streams shall be tested to characterize hazard levels as follows:

Test 1 - California : SW846, Total Threshold Limit Concentration (TTLC)

If: TTLC is less than 50 mg/kg STOP testing - classify as non-hazardous waste.

If: TTLC is greater than 50 mg/kg but less than 1000 mg/kg perform test 2 to determine Cal-Haz status.

Test 2 - California : Waste Extraction Test (WET), Soluble Threshold Limit Concentration (STLC)

If: STLC is less than 5 mg/l - classify as a Non Hazardous Waste.

If: STLC is greater than 5 mg/l AND TTLC is greater than 100 – perform test 3 to determine RCRA requirements - classify as a California Hazardous Waste or RCRA Waste (pending TCLP)

Test 3 - Federal : Soluble Threshold Limit Concentration (TCLP)

If: TCLP is less than 5 mg/l - classify as non-RCRA waste.

If: TCLP is greater than 5 mg/l - classify as RCRA waste, stabilize waste.

B. The contractor shall be responsible for the proper storage, packaging, labeling, manifesting, transportation, and disposal of lead containing and lead hazardous materials.

C. Packing, labeling, transporting, and disposing of hazardous waste shall comply with Cal-EPA regulations under 22 CCR, including completion of the Uniform Hazardous Waste Manifest Form (OTSC 8022A and EPA 8700-22).

D. Segregate, containerize, and characterize construction debris including rags, protective coveralls, polyethylene sheeting, and other consumable items. Waste will be packaged in accordance with the applicable U.S. Department of Transportation regulations included in 49 CFR Parts 173, 178, and 179.

E. A "Waste Manifest" will be completed for disposal of hazardous waste. The Hazardous waste transporter will possess a valid EPA Transporter ID number. The Contractor's Supervisor will notify the Owner's Inspector at least 48 hours before the time that the Manifest is required to be signed by the Owner.

F. Warning labels will be affixed to all waste containers that contain lead wastes in concentrations considered hazardous. The labels will conform to RCRA, DOT, and DTSC guidelines.

G. Any lead contaminated water generated during the work for decontamination purposes will be filtered to 5 µm and drummed. If TTLC/STLC testing can prove that the water is non-hazardous, it will be discharged into the sanitary sewer system (pending approval from the local PUC). If the water is shown as hazardous per TTLC/STLC testing, it will be disposed as such.

PART 3 - DEFINITIONS

A. Aerosol: A system consisting or particles, solid or liquid, suspended in air.

B. Air Monitoring: The process of measuring the lead content of a specific volume air.

C AL: Action level - employee exposure, without regard to the use of respirators, to an airborne concentration of lead of 30 micrograms per cubic meter of air (30 mg/m3) calculated as an 8-hour time-weighted average (TWA).

D. Authorized Visitor: The Owner, Owner's Representative, testing lab personnel, emergency personnel or a representative of any federal, state, and local regulatory or other agency having authority over the project.

E. Barrier: Impermeable membrane (e.g. Plastic) that captures, hold, or otherwise contains and inhibit the movement of dust.

F. Blood Lead Monitoring: Each worker potentially exposed to hazardous levels of lead must routinely give a blood sample which is to be tested for lead.

G. Breathing Zone: A hemisphere forward of the shoulders with a radius of approximately 6 to 9 inches.

H. CDPH: California Department of Public Health previously known as California Department of Health Services (DHS).

I. Ceiling Concentration: The concentration of an airborne substance that shall not be exceeded.

J. Certified Industrial Hygienist (C.I.H.): An industrial hygienist certified in Comprehensive Practice by the American Board of Industrial Hygiene.

K. Daily and Final Clean up: Process includes thorough HEPA vacuuming of all surfaces next wash or mop the same surfaces with a tri- sodium phosphate (TSP) detergent solution (five percent) or other equally effective cleaning agent and allow surfaces to dry. Then a second HEPA Vacuuming.

L. Demolition: The wrecking or taking out of any building component, system, finish or assembly of a facility together with any related handling operations.

M. Disposal Bag: A properly labeled leak-tight, 6-mil thick leak-tight plastic bag used for transporting lead waste from work area to disposal site.

N. DHS: California Department of Health Services – now known as California Department of Public Health (CDPH).

O. EBL: Elevated Blood-lead Level. For adult workers, OSHA set 40 micrograms of lead per deciliter of blood, and NIOSH set 25 micrograms per deciliter.

P. Final Clean up: A minimum of a HEPA-vacuuming, wet wiping and a second HEPA-vacuuming is required. This procedure is repeated until area passes final inspection.

Q. Final Inspection: After the final clean up is complete, the final inspection takes place which consists of the post-construction visual inspection.

R. HEPA Filter: A High Efficiency Particulate Air (HEPA) filter capable of trapping and retaining 99.97% of airborne material greater than 0.3 microns in diameter.

S. HEPA Filter Vacuum Collection Equipment (or Vacuum cleaner): High efficiency particulate air filtered vacuum collection equipment with a filter system capable of collecting and retaining lead dust. Filters should be 99.97% efficient for retaining particles greater that 0.3 microns in diameter.

T. High-efficiency particulate air filter: (HEPA) refers to a filtering system capable of trapping and retaining 99.9% of all monodispersed particles 0.3 microns in diameter or larger.

U. HUD: U. S. Department of Housing and Urban Development. Responsible for the Lead-Based Paint Guidelines for the Public and Indian Housing Authorities.

V. LBP: Lead-Based Paint. Coating containing lead in concentrations at or above 1 milligrams of lead per square centimeter (mg/cm^2), 5000 ppm, or ,5% weight percent.

W. LCP: Lead-Containing Paint. Coating containing detectable amounts of lead on concentrations below 1 milligrams of lead per square centimeter (mg/cm^2), 5000 ppm, or ,5% weight percent.

X. Lead: metallic lead, all inorganic lead compounds, and organic lead soaps. Excluded from this definition are all other organic lead compounds.

Y. Medical Removal: An employee must be removed from any job with lead exposure. When the employees blood level levels reach certain regulator levels prescribed by Cal OSHA.

Z. Micrograms: Is one millionth of a gram. This is used for reporting lead concentrations in wipe samples (micrograms per square foot) and blood level (micrograms per deciliter).

AA. Negative Pressure Respirator: A respirator in which the air pressure inside the respiratory-inlet covering is positive during exhalation in relation to the air pressure of the outside atmosphere and negative during inhalation in relation to the air pressure of the outside atmosphere.

BB. Negative Pressure Ventilation System: A differential and ventilation system used to reduce atmospheric pressure within the work area relative to areas outside the work area.

CC. NIOSH: National Institute of Occupational Safety and Health (NIOSH), U.S. Department of Health and Human Services or designee.

DD. Owner's Representative: The Owner's Representative will represent the Owner during construction. The Owner's Representative will advise and consult with the Owner. The owner's instructors to the Contractor will be forwarded through the Owner's Representative.

EE. PEL: Permissible exposure limit - employee exposure, without regard to the use of respirators, to an airborne concentration of lead of 30 micrograms per cubic meter of air (50 mg/m3) calculated as an 8-hour time-weighted average (TWA).

FF. Personal Monitoring: Sampling of the lead concentrations within the breathing zone of an employee.

GG. Post-construction Visual Inspection: Inspector insures that lead-related construction work has been completed.

HH. Protection Factor: The ratio of the ambient concentration of an airborne substance tot he concentration of the substance inside the respirator at the breathing zone of the wearer. The protection factor is a measure of the degree of protection provided by a respirator to the wearer.

II. Respirator: A device designed to protect the wearer form the inhalation of harmful atmospheres.

JJ. Supervisor: one who is capable of identifying existing and predictable lead hazards in the surroundings or working conditions and who has authorization to take prompt corrective measures to eliminate them. Supervisors shall be trained, as required by Cal OSHA, and, when required, be CDPH certified.

KK. Time Weighted Average (TWA): The average concentration of a contaminant air during a specific time period.

LL. TSP: Trisodium Phosphate. Contractor may elect to use an equivalent Detergent.

MM. Visible Emissions: Any emissions containing particulate material that are visually detectable with the aid of instruments. This does not include condensed uncombined water vapor.

NN. Wet Cleaning: The process of reducing lead dust contamination from building surfaces and objects by using cloths, mops, or other cleaning utensils which have been dampened with

water in a minimum of 5% TSP solution (or equivalent detergent). Wash water should be changed frequently. Dry sweeping is prohibited. Dispose of all cleaning materials in an appropriate manner.

OO. Wipe Sample: A commercial wipe pre-moistened with a non-alcohol wetting agent is used to clean a set surface area, usually one square foot, to test for lead. These are taken mostly during the Pilot Project and during the Final Inspection.

PP. Work Area: The area where lead-related activities are performed which is defined and/or isolated to prevent the spread of lead dust or debris, and entry by unauthorized personnel.

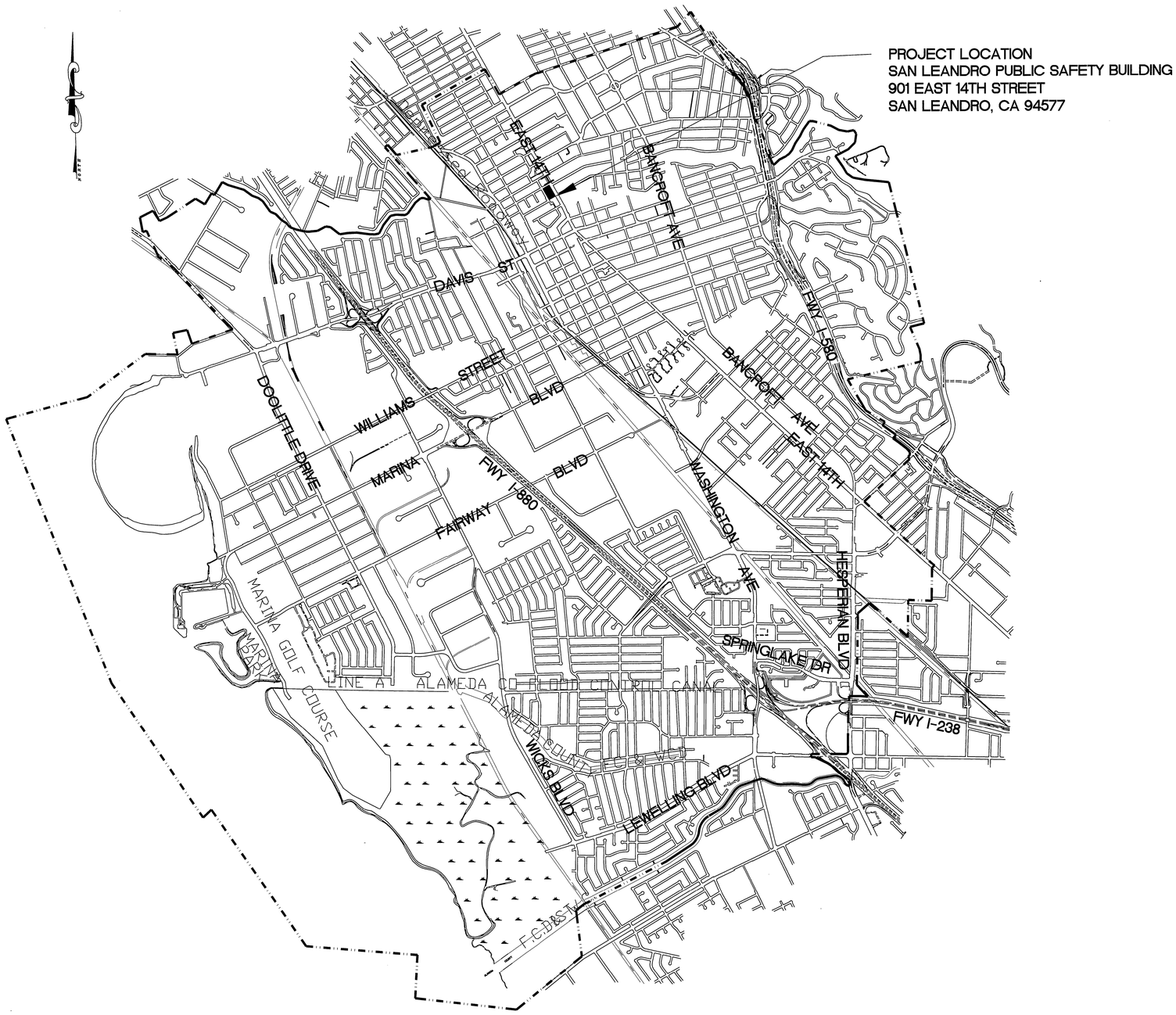

VICINITY MAP

CITY OF SAN LEANDRO

PUBLIC SAFETY
HVAC EQUIPMENT REPLACEMENT

PROJECT NO. 2013.0290
BID NO. 14-15.005

SHEET NO.		DRAWING	DWG. NO.	CASE NO.
1	G-0.0	TITLE SHEET	3829	901
2	M-0.0	MECHANICAL COVER SHEET	3830	901
3	M-0.1	MECHANICAL SYMBOLS & ABBREVIATIONS	3831	901
4	M-0.2	MECHANICAL TITLE 24	3832	901
5	M-0.3	MECHANICAL TITLE 24	3833	901
6	MD-1.1	MECHANICAL PARTIAL 2ND FLOOR PLAN – DEMO	3834	901
7	M-1.1	MECHANICAL PARTIAL 2ND FLOOR PLAN – NEW	3835	901
8	MD-3.1	MECHANICAL SECTION VIEWS – DEMO	3836	901
9	M-3.1	MECHANICAL SECTION VIEWS – NEW	3837	901
10	M-3.2	MECHANICAL SECTION VIEWS – NEW	3838	901
11	M-5.1	MECHANICAL DETAILS	3839	901
12	M-5.2	MECHANICAL DETAILS	3840	901
13	M-5.3	MECHANICAL DETAILS	3841	901
14	M-6.1	MECHANICAL SCHEDULES	3842	901
15	E-0.0	ELECTRICAL NOTES, SYMBOLS & ABBREVIATIONS	3843	901
16	E-0.1	ELECTRICAL TITLE 24	3844	901
17	E-1.0	ELECTRICAL PARTIAL 1ST FLOOR PLAN	3845	901
18	ED-1.1	ELECTRICAL PARTIAL 2ND FLOOR PLAN – DEMO	3846	901
19	E-1.1	ELECTRICAL PARTIAL 2ND FLOOR PLAN – NEW	3847	901
20	E-5.1	ELECTRICAL DETAILS	3848	901
21	E-5.2	ELECTRICAL DETAILS	3849	901
22	E-7.1	ELECTRICAL SINGLE LINE DIAGRAM	3850	901
23	S1	STRUCTURAL PARTIAL 2ND FLOOR PLAN	3851	901

GENERAL NOTES:

1. THESE DRAWINGS REPRESENT THE GENERAL DESIGN INTENT TO BE IMPLEMENTED ON THE SITE. CONTRACTOR SHALL BE RESPONSIBLE FOR CONTACTING THE ENGINEER FOR ANY ADDITIONAL CLARIFICATION OR DETAIL NECESSARY TO ACCOMMODATE SITE CONDITIONS OR DETAIL.
2. CONTRACTOR SHALL COORDINATE AND OTHERWISE INTEGRATE HIS WORK WITH THAT OF OTHERS IN AN EFFICIENT, CRAFTSMANLIKE AND TIMELY MANNER SO AS TO PROVIDE THE CITY WITH A WELL CONSTRUCTED, EASILY MAINTAINABLE PROJECT.
3. AT ALL TIMES, CONTRACTOR SHALL BE SOLELY AND COMPLETELY RESPONSIBLE FOR SITE CONDITIONS DURING THE COURSE OF CONSTRUCTION OF THIS PROJECT, INCLUDING SAFETY OF ALL PERSONS AND PROPERTY. THIS REQUIREMENT SHALL APPLY CONTINUOUSLY AND NOT BE LIMITED TO NORMAL WORKING HOURS; AND THE CONTRACTOR SHALL DEFEND, INDEMNIFY AND HOLD THE TO NORMAL WORKING HOURS; AND THE CONTRACTOR SHALL DEFEND, INDEMNIFY AND HOLD THE WITH THE PERFORMANCE OF WORK ON THIS PROJECT.
4. THE CONTRACTOR IS HEREBY NOTIFIED THAT, PRIOR TO COMMENCING CONSTRUCTION, HE IS RESPONSIBLE FOR CONTACTING THE UTILITY COMPANIES INVOLVED AND REQUESTING A VISUAL VERIFICATION OF LOCATIONS OF THEIR UNDERGROUND FACILITIES. THE UTILITY COMPANIES ARE MEMBERS OF THE UNDERGROUND SERVICE ALERT (U.S.A.) ON CALL PROGRAM. THE CONTRACTOR SHALL NOTIFY MEMBERS OF U.S.A. AT LEAST TWO (2) WORKING DAYS IN ADVANCE OF PERFORMING EXCAVATION WORK BY CALLING 811 or (800) 227-2600.

REGISTERED PROFESSIONAL ENGINEER CARL A. CRITZER No. M05880 MECHANICAL STATE OF CALIFORNIA

REGISTERED PROFESSIONAL ENGINEER KENNETH C. JOSEPH No. 34870 Exp. 9/30/14 Civil STATE OF CALIFORNIA

CITY OF SAN LEANDRO INCORPORATED 1872

BEFORE YOU DIG, CALL UNDERGROUND SERVICE ALERT 811

IT SHALL BE THE CONTRACTOR'S RESPONSIBILITY TO DETERMINE THE EXISTENCE AND LOCATION OF ALL UNDERGROUND UTILITIES. THOSE SHOWN REPRESENT THE BEST INFORMATION AVAILABLE TO THE CITY OF SAN LEANDRO AT THE TIME OF PREPARATION OF THESE PLANS. NO GUARANTEE IS MADE AS TO THE ACCURACY OF THIS INFORMATION.

NO.	DATE	REVISION

CITY OF SAN LEANDRO

DESIGNED BY		DATE
DRAWN BY	TP	DATE 07/24/14
PROJECT MGR.	MGC	DATE 7/31/14
TRANS ADMIN.		DATE 8/1/14
SENIOR ENGR.		DATE 8/1/14
APPROVED BY		DATE 8/14/14

CITY ENGINEER, R.C.E. No. 34870

PUBLIC SAFETY
HVAC EQUIPMENT REPLACEMENT
TITLE SHEET

G-0.0

AT FULL SIZE THIS LINE MEASURES 1"

SHEET 1 OF 23
JOB NO. 2013.0290
SCALE AS NOTED
DWG 3829 CASE 901

K:\drawings\City of San Leandro\130340 Police Dept. AHU Replacement\130340G-0.0.dwg 7/31/2014 9:18 AM James Ajak

07/28/14 BID SET

VICINITY MAP

SCALE: N.T.S.

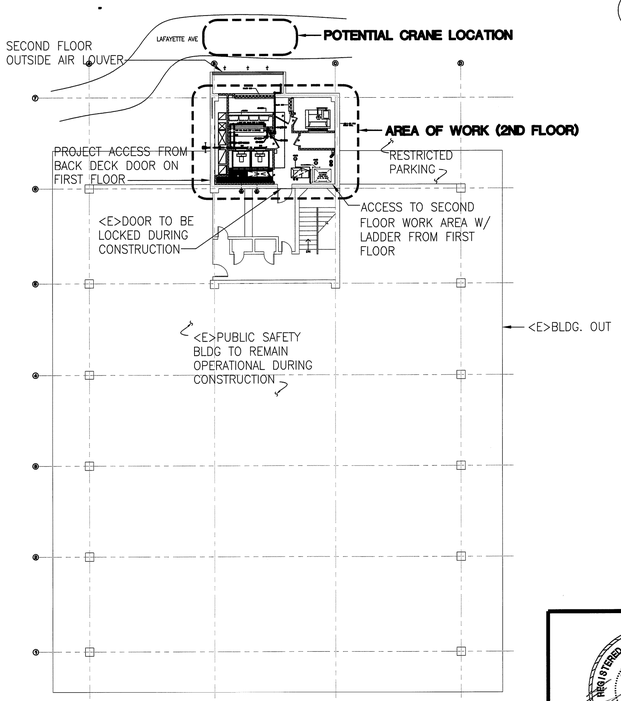

1 LOCATION MAP

SCALE: N.T.S.

APPLICABLE CODES

UNLESS OTHERWISE INDICATED OR SPECIFIED, PERFORM THE WORK IN CONFORMANCE WITH THE LATEST EDITIONS OF ALL APPLICABLE REGULATORY REQUIREMENTS, INCLUDING, BUT NOT LIMITED TO, THE FOLLOWING:

1. CALIFORNIA BUILDING STANDARDS ADMINISTRATIVE CODE (PART 1, TITLE 24): 2013 (2010 CHAPTER 10 IN EFFECT UNTIL JULY 1, 2014)
2. CALIFORNIA BUILDING CODE (PART 2, TITLE 24): 2012 IBC WITH 2013 CA AMENDMENTS
3. CALIFORNIA ELECTRICAL CODE (PART 3, TITLE 24): 2011 NEC WITH 2013 CA AMENDMENTS
4. CALIFORNIA MECHANICAL CODE (PART 4, TITLE 24): 2012 UMC WITH 2013 CA AMENDMENTS
5. CALIFORNIA PLUMBING CODE (PART 5, TITLE 24) 2012 UPC WITH 2013 CA AMENDMENTS
6. CALIFORNIA ENERGY CODE (PART 6, TITLE 24): 2013 (2010 IN EFFECT UNTIL JULY 1, 2014)
7. CALIFORNIA HISTORICAL BUILDING CODE, (PART 8, TITLE 24): 2013
8. CALIFORNIA FIRE CODE (PART 9, TITLE 24): 2012 IFC WITH 2013 CA AMENDMENTS
9. CALIFORNIA EXISTING BUILDING CODE (PART 10, TITLE 24): 2012 (INTERNATIONAL EXISTING BUILDING CODE WITH 2013 CA AMENDMENTS)
10. CALIFORNIA GREEN BUILDING STANDARDS CODE OR CAL GREEN (PART 11, TITLE 24): 2013 (AFFECTED 2010 ENERGY PROVISIONS ONLY IN EFFECT UNTIL JULY 1, 2014)
11. CALIFORNIA REFERENCED STANDARDS CODE (PART 12, TITLE 24): 2013
12. PUBLIC SAFETY (TITLE 19), STATE FIRE MARSHAL: 2013
13. NFPA 72, NATIONAL FIRE ALARM CODE, 2013 EDITION W/ CA AMENDMENTS

NOTE: THIS FACILITY IS AN ESSENTIAL SERVICES BUILDING.

GENERAL NOTES

1. ALL WORK, MATERIALS, AND METHODS USED SHALL CONFORM TO SMACNA, "GUIDELINES FOR SEISMIC RESTRAINTS OF MECHANICAL SYSTEMS".
2. ALL WORK SHALL CONFORM WITH ALL APPLICABLE LOCAL, STATE, AND NATIONAL CODES.
3. PATCH EXISTING AND NEW OPENINGS SO FINISH PROFILES, FIXTURES, ETC. MATCH ADJACENT UNDISTURBED WORK.
4. ALL DIMENSIONS ARE APPROXIMATE. THE DRAWINGS ARE DIAGRAMMATIC TO THE EXTENT THAT ALL FITTINGS, OFFSETS, ETC. ARE NOT SHOWN. THESE DRAWINGS ARE FOR THE GUIDANCE OF THE CONTRACTOR. CONTRACTOR SHALL VERIFY ALL DIMENSIONS IN THE FIELD FOR FABRICATION OF PENETRATIONS, CONDUIT, WIRING, AND ALL COMPONENTS INTO A COMPLETE AND OPERABLE SYSTEM.
5. WATERPROOF ALL PENETRATIONS IN EXTERIOR BUILDING ELEMENTS.
6. WHERE DISCREPANCIES OCCUR BETWEEN THE PLANS AND SPECIFICATIONS CONTRACTOR SHALL NOTIFY OWNER OF ANY DISCREPANCIES IN WRITING. ANY ADJUSTMENT OF THE CONTRACT DOCUMENTS WITHOUT A DETERMINATION BY THE OWNER SHALL BE AT THE CONTRACTOR'S OWN RISK AND EXPENSE. THE MOST STRINGENT REQUIREMENTS SHALL APPLY AS DETERMINED BY THE OWNER.
7. CONTRACTOR SHALL PERFORM ALL WORK IN ACCORDANCE WITH MANUFACTURERS RECOMMENDATIONS.
8. EQUIPMENT LOCATIONS ARE APPROXIMATE; SUBMIT ANY CHANGES IN UNIT LOCATIONS TO CITY FOR APPROVAL.
9. THE INTENT OF THESE DRAWINGS AND SPECIFICATIONS IS THAT THE WORK OF THE ALTERATION, REHABILITATION OR RECONSTRUCTION IS TO BE IN ACCORDANCE WITH TITLE 24, CALIFORNIA CODE OF REGULATIONS. SHOULD ANY EXISTING CONDITIONS SUCH AS DETERIORATION OR NONCOMPLYING CONSTRUCTION BE DISCOVERED WHICH IS NOT COVERED IN THE CONTRACT DOCUMENTS WHEREIN THE FINISHED WORK WILL NOT COMPLY WITH TITLE 24, CALIFORNIA CODE OF REGULATIONS, A CHANGE ORDER, OR A SEPARATE SET OF PLANS AND SPECIFICATIONS, DETAILING AND SPECIFYING THE REQUIRED WORK SHALL BE SUBMITTED TO AND APPROVED BY THE ENGINEER BEFORE PROCEEDING WITH THE WORK.
10. ALL WORK IS REMOVE & REPLACE U.O.N.
11. MAINTAIN FIRE RATING INTEGRITY OF ALL FIRE-RATED ASSEMBLIES.
12. THE HEATING HOT WATER PIPING, EQUIPMENT, AND SUPPORTS MAY CONTAIN ASBESTOS AND/OR LEAD BASED PAINT. REFER TO SEE SPECIFICATION SPECIAL PROVISIONS FOR ABATMENT REQUIREMENTS.

SUMMARY OF WORK

1. DISCONNECT & REMOVE THE <E> AIR HANDLER IN THE 2ND FLOOR MECHANICAL ROOM.
2. PROVIDE & INSTALL A NEW 40 TON BUILT UP AIR HANDLER IN THE 2ND FLOOR MECHANICAL ROOM. THIS AIR HANDLER CONSISTS OF ALL PLENUM PANEL, FANS, COILS, LOUVERS, DUCTWORK, ETC.
3. PROVIDE TEMPORARY COOLING & HEATING DURING CONSTRUCTION.
4. ALL MECHANICAL, ELECTRICAL, STRUCTURAL, & ARCHITECTURAL WORK FOR THE ABOVE.
5. CONTROLS TO BE INSTALLED BY THE CITY. CONTRACTOR TO COORDINATE.
6. FIRE ALARM WORK TO BE A DIFFERED SUBMITTAL BY THE CITY. CONTRACTOR TO COORDINATE.
7. SEE THE PROJECT SPECIAL PROVISIONS FOR ABETMENT WORK.
8. ADDITIVE ALTERNATE TO PAINT WALLS, CEILING & FLOOR PER SHEET M1.1.

SUMMARY OF SPECIAL INSPECTIONS WORK

THE FOLLOWING SPECIFIC ITEMS SHALL BE INSPECTED AND/OR TESTED BY THE TESTING LAB IN ACCORDANCE WITH SECTION 1704, 1707, AND 1708 OF THE 2013 CALIFORNIA BUILDING CODE:

1. WELDING.
2. EXPANSION ANCHORS – PERIODIC INSPECTION OF 25% OF ALL ANCHORS WITH A MINIMUM 25% OF ALTERATING ANCHORS WITHIN A GROUP.

REGISTERED PROFESSIONAL ENGINEER CARL A. CRITZER No. M36859 MECHANICAL STATE OF CALIFORNIA

CITY OF SAN LEANDRO INCORPORATED 1872

BEFORE YOU DIG, CALL UNDERGROUND SERVICE ALERT 811

IT SHALL BE THE CONTRACTOR'S RESPONSIBILITY TO DETERMINE THE EXISTENCE AND LOCATION OF ALL UNDERGROUND UTILITIES. THOSE SHOWN REPRESENT THE BEST INFORMATION AVAILABLE TO THE CITY OF SAN LEANDRO AT THE TIME OF PREPARATION OF THESE PLANS. NO GUARANTEE IS MADE AS TO THE ACCURACY OF THIS INFORMATION.

NO.	DATE	REVISION

CITY OF SAN LEANDRO

DESIGNED BY		DATE
DRAWN BY	TP	DATE 07/24/14
PROJECT MGR.	MGG	DATE 7/31/14
TRANS ADMIN.	DH	DATE 8/1/14
SENIOR ENGR.	J.J.	DATE 8/1/14
APPROVED BY		DATE 8/4/14

CITY ENGINEER, R.C.E. No. 34870

PUBLIC SAFETY
HVAC EQUIPMENT REPLACEMENT
MECHANICAL COVER SHEET

M-0.0

AT FULL SIZE THIS LINE MEASURES 1"

SHEET 2 OF 23

JOB NO. 2013.0290

SCALE AS NOTED

DWG 3830 CASE 901

K:\drawings\City of San Leandro\130340 Police Dept. AHU Replacement\130340M-0.0.DWG 7/31/2014 9:34 AM James Ajak

07/28/14 BID SET

MECHANICAL GENERAL NOTES

1. ALL WORK SHALL CONFORM WITH ALL APPLICABLE LOCAL, STATE, & NATIONAL CODES.
2. CONTRACTOR SHALL PERFORM ALL WORK IN ACCORDANCE WITH MANUFACTURER'S RECOMMENDATIONS.
3. ALL DIMENSIONS ARE APPROXIMATE. THE DRAWINGS ARE DIAGRAMMATIC TO THE EXTENT THAT ALL FITTINGS, OFFSETS, ETC. ARE NOT SHOWN. THESE DRAWINGS ARE FOR THE GUIDANCE OF THE CONTRACTOR. CONTRACTOR SHALL VERIFY ALL DIMENSIONS IN THE FIELD FOR FABRICATION OF THE PIPING, PENETRATIONS, CONDUIT, WIRING, & ALL COMPONENTS INTO A COMPLETE & OPERABLE SYSTEM.
4. THE PLANS & SPECIFICATIONS DO NOT UNDERTAKE TO SHOW OR LIST EVERY ITEM TO BE PROVIDED, BUT RATHER TO DEFINE THE REQUIREMENTS FOR A FULL & WORKING SYSTEM FROM THE STANDPOINT OF THE END USER. FOR THIS REASON, WHEN AN ITEM NOT SHOWN OR LISTED IS CLEARLY NECESSARY FOR PROPER CONTROL/ OPERATION OF EQUIPMENT WHICH IS SHOWN OR LISTED, PROVIDE AN ITEM WHICH WILL ALLOW THE SYSTEM TO FUNCTION PROPERLY AT NO INCREASE IN PRICE.
5. THE OWNER SHALL BE NOTIFIED AT LEAST FORTY–EIGHT (48) HOURS IN ADVANCE OF ANY POWER SHUTDOWN OF EXISTING PANELS OR SERVICE. SCHEDULE OF SHUTDOWNS SHALL BE AT CONVENIENCE OF THE OWNER. THE OWNER MAY, AT ITS OPTION, HAVE A REPRESENTATIVE PRESENT DURING SHUTDOWN.
6. INSTALL NAMEPLATES ON ALL EQUIPMENT WITH DESCRIPTION INDICATED ON DRAWINGS OR PROVIDED BY ENGINEER, IN ADDITION TO SIGNAGE REQUIRED BY NEC.
7. COORDINATE EQUIPMENT LOCATIONS, CONTROL & POWER WIRING REQUIREMENTS AND CONNECTION POINTS.
8. ALL DUCT DIMENSIONS ARE INSIDE CLEAR. CONTRACTOR TO ADJUST FOR INSULATION REQUIREMENTS, DOUBLE DUCT ON EXTERIOR, DUCT COVERS, ETC.

MECHANICAL ABBREVIATIONS

AH	AIR HANDLER	EA	EXHAUST AIR	MAX	MAXIMUM
ARCH	ARCHITECTURAL	EAT	ENTERING AIR TEMPERATURE	MBH	1,000 BTU PER HOUR
AVG	AVERAGE	EDB	ENTERING DRY BULB	MECH	MECHANICAL
BDD	BACKDRAFT DAMPER	EER	ENERGY EFFICIENCY RATIO	MIN	MINIMUM
BFV	BUTTERFLY VALVE	EF	EXHAUST FAN	N.T.S.	NOT TO SCALE
BHP	BRAKE HORSEPOWER	ELECT	ELECTRICAL		PUMP
BTU	BRITISH THERMAL UNIT	ESP	EXTERNAL STATIC PRESSURE (IN.W.G.)	PH	PHASE
BTUH	BRITISH THERMAL UNIT PER HOUR	EWT	ENTERING WATER TEMPERATURE	PSI(G)	POUNDS PER SQUARE INCH (GAUGE)
BV	BALL VALVE	F	FAHRENHEIT	REQ	REQUIRED
CC	COOLING COIL	FD	FIRE DAMPER	RPM	REVOLUTIONS PER MINUTE
CFM/℄	CUBIC FEET PER MINUTE	FPM	FEET PER MINUTE	SF	SQUARE FEET
CH	CHILLER	FSD	COMBINATION FIRE AND SMOKE DAMPER	SPECS	SPECIFICATIONS
CWP	CHILLED WATER PUMP	FT	FEET	S/S	START/STOP
CWR	CHILLED WATER RETURN	G	GAS	STD	STANDARD
CWS	CHILLED WATER SUPPLY	GA	GAUGE	TEMP	TEMPERATURE
COND	CONDENSATE DRAIN OR CONDENSER	GAL	GALLONS	TYP	TYPICAL
CP	CONTROL PANEL	GPM	GALLONS PER MINUTE	U.O.N.	UNLESS OTHERWISE NOTED
CR	CEILING RETURN	HP	HORSEPOWER	V/P/H	VOLT/PHASE/HERTZ
CS	CEILING SUPPLY	HR	HOUR	VAV	VARIABLE AIR VOLUME
CT	CURRENT TRANSDUCER	HVAC	HEATING VENTILATING & AIR CONDITIONING	VFD	VARIABLE FREQUENCY DRIVE
CU	CONDENSING UNIT	HZ	HERTZ; CYCLES PER SECOND	WB	WET BULB
CV	CONTROL VALVE OR CONSTANT VOLUME	IN.	INCH	WL	WALL LOUVER
DB	DRY BULB	KW	KILOWATT	WR	WALL RETURN
DDC	DIRECT DIGITAL CONTROL	LAT	LEAVING AIR TEMPERATURE	WS	WALL SUPPLY
DIA	DIAMETER	LBS	POUNDS	WT	WEIGHT
DN	DOWN	LDB	LEAVING DRY BULB		
<E>	EXISTING	LWT	LEAVING WATER TEMPERATURE		

MECHANICAL SYMBOLS

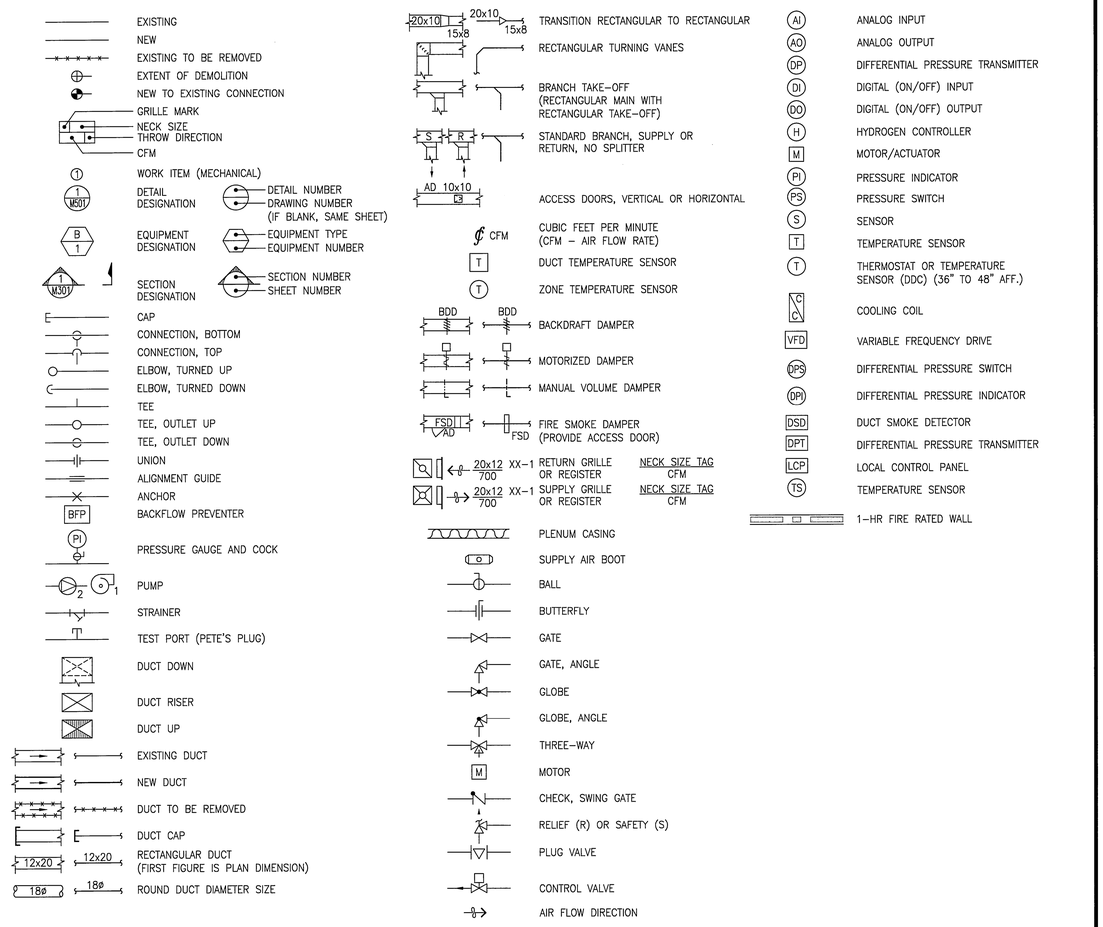

SPECIAL REQUIREMENTS

1. ALL FIRE ALARM WORK SHALL BE BY DENALECT ALARM COMPANY. THE FIRE ALARM CONTRACTOR SHALL BE HIRED BY THE CITY BUT THE MECHANICAL & ELECTRICAL CONTRACTORS SHALL BE REQUIRED TO COORDINATE THEIR WORK WITH THE FIRE ALARM CONTRACTOR.

TEMPORARY HVAC PROVISIONS

DURING CONSTRUCTION TEMPORARY COOLING & HEATING SHALL BE PROVIDED AS FOLLOWS:

1. FOR THE 2ND FLOOR, TEMPORARY COOLING SHALL BE PROVIDED BY REMOVING THE DOORS ON THE MAGIC AIR UNITS ROOF WHICH SERVE THE 2ND FLOOR.
2. IF HEATING IS ALSO REQUIRED ON THE 2ND FLOOR, THE DOORS TO THE MAGIC AIR UNITS SHALL BE REINSTALLED BY THE CONTRACTOR.
3. THE CONTRACTOR SHALL COORDINATE THE ABOVE CHANGE OVERS WITH THE CITIES FACILITY'S ENGINEER. ASSUME THAT SOME CHANGE MAY NEED TO BE MADE AT NIGHT & DURING THE WEEKENDS.
4. FOR THE 1ST FLOOR & PORTIONS OF THE BASEMENT SERVED BY AIR HANDLER ONE TEMPORARY COOLING SHALL BE PROVIDED BY INSTALLING E–4 IN A TEMPORARY PLENUM TRANSITION IN THE 2ND FLOOR MECHANICAL ROOM (SEE M–1.1D FOR LOCATION). THE INTAKE OF THE FAN SHALL BE COVERED WITH CHICKEN WIRE & FILTER MEDIA TO KEEP ANY CONSTRUCTION DUST FROM ENTERING THE BUILDING.
5. UPON PROJECT COMPLETION E–4 SHALL BE GIVEN TO THE CITY AS A SPARE FOR E–4 ON THE ROOF.

TEST & BALANCE SUMMARY

PERFORM PRE WORK MEASUREMENTS OF THE AIR OUTLETS SERVED BY AHU–1 TO BE REPLACE. ASSUME 175 AIR OUTLETS.

REPEAT THE ABOVE MEASUREMENTS ONCE AIR HANDLER AHU–1 HAS BEEN REPLACED.

PERFORM A COMPLETE TEST, ADJUST, & BALANCING OF THE NEW AIR HANDLER AHU–1, INCLUDING MOTOR AMPS, RPM'S, STATIC PRESSURES, & TEMPERATURES. THIS INCLUDES THE SUPPLY & RETURN FANS.

BALANCE THE CHILLED WATER FOR THE NEW AIR HANDLER AHU–1THE FLOW FOR THIS AIR HANDLER SHALL BE 100 GPM FOR THE CHILLER WATER COIL & 60 GPM FOR THE HEATING HOT WATER COIL.

PERFORM THE HYDRONIC COMMISSIONING WORK REQUIRED BY TITLE 24. SEE THE TITLE 24 SHEET FOR MORE INFORMATION.

PERFORM THE AIR SIDE COMMISSIONING WORK REQUIRED BY TITLE 24. SEE THE TITLE 24 SHEET FOR MORE INFORMATION.

M–0.1

REGISTERED PROFESSIONAL ENGINEER — CARL A. ORTZEN — No. M36859 — MECHANICAL — STATE OF CALIFORNIA

CITY OF SAN LEANDRO — INCORPORATED 1872

BEFORE YOU DIG, CALL UNDERGROUND SERVICE ALERT 811

IT SHALL BE THE CONTRACTOR'S RESPONSIBILITY TO DETERMINE THE EXISTENCE AND LOCATION OF ALL UNDERGROUND UTILITIES. THOSE SHOWN REPRESENT THE BEST INFORMATION AVAILABLE TO THE CITY OF SAN LEANDRO AT THE TIME OF PREPARATION OF THESE PLANS. NO GUARANTEE IS MADE AS TO THE ACCURACY OF THIS INFORMATION.

NO.	DATE	REVISION

CITY OF SAN LEANDRO

DESIGNED BY ____ DATE ____
DRAWN BY TP DATE 07/24/14
PROJECT MGR. MGG DATE 7/31/14
TRANS ADMIN. — DATE —
SENIOR ENGR. JJ. DATE 8/1/14
APPROVED BY: DATE 8/6/14
CITY ENGINEER, R.C.E. No. 34870

PUBLIC SAFETY
HVAC EQUIPMENT REPLACEMENT
MECHANICAL SYMBOLS & ABBREVIATIONS

M–0.1

AT FULL SIZE THIS LINE MEASURES 1"

SHEET 3 OF 23
JOB NO. 2013.0290
SCALE AS NOTED
DWG 3831 CASE 901

K:\drawings\City of San Leandro\130340 Police Dept. AHU Replacement\130340M–0.1.DWG 7/31/2014 9:33 AM James Ajak

07/28/14 BID SET

SCHEDULES

CERTIFICATE OF COMPLIANCE and FIELD INSPECTION ENERGY CHECKLIST (Page 1 of 5) **MECH-1C**

Project Name: POLICE DEPARTMENT AHU REPLACEMENT — Date: 10/15/2013 — Climate Zone: 3

Project Address: 901 EAST 14TH STREET SAN LEANDRO, CA 94577 — Conditioned Floor Area: 17,252 SF

General Information

Building Type [X] Nonresidential [ ] High-Rise Residential [ ] Hotel/Motel Guest Room

[ ] Schools(Public School) [ ] Relocatable Public School Bldg. [ ] Conditioned Spaces [ ] Unconditioned Spaces

Phase of construction: [ ] New Construction [ ] Addition [X] Alteration

Approach of Compliance: [ ] Component [ ] Unconditioned(file affidavit)

Front Orientation:N,E,S,W or in Degrees:

HVAC SYSTEM DETAILS		FIELD INSPECTION ENERGY CHECKLIST	
		Meets Criteria or Requirements	
Equipment	**Inspection Criteria**	**Pass**	**Fail-Describe Reason[2]**
Item or System Tags (i.e. AC-1, RTU-1,HP-1)	AHU-1	[ ]	[ ]
Equipment Type[3] :	AIR HANDLER	[ ]	[ ]
No of Systems	1	[ ]	[ ]
Max Allowed Heating Capacity[1]	N/A	[ ]	[ ]
Minimum Heating Efficiency[1]	N/A	[ ]	[ ]
Max Allowed Cooling Capacity[1]	SEE M6.1	[ ]	[ ]
Cooling Efficiency[1]	N/A	[ ]	[ ]
Duct Location/R-Value	SEE M1.1	[ ]	[ ]
When duct testing is required, submit **MECH-4A & MECH-4-HERS**	N/A	[ ]	[ ]
Economizer	YES	[ ]	[ ]
Thermostat	YES	[ ]	[ ]
Fan Control	BY CONTROLS CONTRACTOR	[ ]	[ ]

		FIELD INSPECTION ENERGY CHECKLIST	
Equipment	**Inspection Criteria**	**Pass**	**Fail-Describe Reason**
Item or System Tags (i.e.AC-1,RTU-1,HP-1)	N/A	[ ]	[ ]
Equipment Type[3]:	N/A	[ ]	[ ]
No of Systems	N/A	[ ]	[ ]
Max Allowed Heating Capacity[1]	N/A	[ ]	[ ]
Minimum Heating Efficiency[1]	N/A	[ ]	[ ]
Max Allowed Cooling Capacity[1]	N/A	[ ]	[ ]
Cooling Efficiency[1]	N/A	[ ]	[ ]
Duct Location/R-Value	N/A	[ ]	[ ]
When duct testing is required,submit **MECH-4A & MECH-4-HERS**	N/A	[ ]	[ ]
Economizer	N/A	[ ]	[ ]
Thermostat	N/A	[ ]	[ ]
Fan Control	N/A	[ ]	[ ]

1. *If the Actual installed equipment performance efficiency and capacity is less than the proposed (from the energy compliance submittal or from the building plans) the responsible party shall resubmit energy compliance to include the new changes.*
2. *For additional detailed discrepancy use page 2 of the Inspection Checklist From Compliance fails if a Fail box is checked.*
3. *Indicate Equipment Type: Gas(Pkg or Split), VAV,HP(Pkg or Split),Hydronic,PTAC,or other*

2008 Nonresidential Compliance Forms *March 2010*

CERTIFICATE OF COMPLIANCE and FIELD INSPECTION ENERGY CHECKLIST (Page 2 of 5) **MECH-1C**

Project Name: POLICE DEPARTMENT AHU REPLACEMENT — Date: 10/15/2013

Discrepancies: N/A

2008 Nonresidential Compliance Forms *March 2010*

CERTIFICATE OF COMPLIANCE and FIELD INSPECTION ENERGY CHECKLIST (Part 3 of 5) **MECH-1C**

Project Name: POLICE DEPARTMENT AHU REPLACEMENT — Date: 10/15/2013

Required Acceptance Tests

Designer:
This form is to be used by the designer and attached to the plans. Listed below are all the acceptance tests for mechanical systems. The designer is required to check the applicable boxes by all acceptance tests that apply and list all equipment that requires an acceptance test. If all equipment of a certain type requires a test, list the equipment description and the number of systems. The NA number designates the section in the appendix of the Nonresidential Reference Appendices Manual that describes the test. Since this form will be part of the plans,Completion of this section will allow the responsible party to budget for the scope of work appropriately.

Enforcement Agency:
***Systems Acceptance**. Before occupancy permit is granted for a newly constructed building or space, or a new space-conditioning system serving a building or space is operated for normal use, all control devices serving the building or s)pace shall be certified as meeting the Acceptance Requirements for Code Compliance.*
***Systems Acceptance**. Before occupancy permit is granted All newly installed HVAC equipment must be tested using the Acceptance Requirements.*

The MECH-1C form is not considered a completed form and is not to be accepted by the building department unless the correct boxes are checked. The equipment requiring testing, person performing the test (Example: HVAC installer, TAB contractor, controls contractor, PE in charge of project) and what Acceptance test must be conducted. The following checked-off forms are required for ALL newly installed and replaced equipment. In addition a Certificate of Acceptance forms shall be submitted to the building department that certifies plans, specifications, installation certificates and operating and maintenance information meet the requirements of ,§10-103(b) and Title 24 Part 6. The building inspector must receive the properly filled out and signed forms before the building can receive final occupancy.

Test Description		MECH-2A	MECH-3A	MECH-4A	MECH-5A	MECH-6A	MECH-7A	MECH-8A	MECH-9A	MECH-10A	MECH-11A
Equipment Requiring Testing or Verification	#of units	Outdoor Ventilation for VAV & CAV	Constant Volume & Single-Zone Unitary	Air Distribution Ducts	Economizer Controls	Demand Controls Ventilation DCV	Supply Fan VAV	Valve Leakage Test	Supply Water Temp.Reset	Hydronic System Variable Flow Control	Automatic Demand Shed Control
AHU-1	1	[X]	[ ]	[X]	[X]	[ ]	[ ]	[ ]	[ ]	[ ]	[ ]
		[ ]	[ ]	[ ]	[ ]	[ ]	[ ]	[ ]	[ ]	[ ]	[ ]
		[ ]	[ ]	[ ]	[ ]	[ ]	[ ]	[ ]	[ ]	[ ]	[ ]
		[ ]	[ ]	[ ]	[ ]	[ ]	[ ]	[ ]	[ ]	[ ]	[ ]
		[ ]	[ ]	[ ]	[ ]	[ ]	[ ]	[ ]	[ ]	[ ]	[ ]
		[ ]	[ ]	[ ]	[ ]	[ ]	[ ]	[ ]	[ ]	[ ]	[ ]
		[ ]	[ ]	[ ]	[ ]	[ ]	[ ]	[ ]	[ ]	[ ]	[ ]
		[ ]	[ ]	[ ]	[ ]	[ ]	[ ]	[ ]	[ ]	[ ]	[ ]
		[ ]	[ ]	[ ]	[ ]	[ ]	[ ]	[ ]	[ ]	[ ]	[ ]
		[ ]	[ ]	[ ]	[ ]	[ ]	[ ]	[ ]	[ ]	[ ]	[ ]

2008 Nonresidential Compliance Forms *August 2009*

CERTIFICATE OF COMPLIANCE and FIELD INSPECTION ENERGY CHECKLIST (Page 4 of 5) **MECH-1C**

Project Name: POLICE DEPARTMENT AHU REPLACEMENT — Date: 10/15/2013

Test Description		MECH-12A	MECH-13A	MECH-14A	MECH-15A	
Equipment Requiring Testing	#of	Fault Detection & Diagnostics for DX Units	Automatic Fault Detection & Diagnostics for Air & Zone	Distributed Energy Storage DX AC Systems	Thermal Energy Storage (TES) Systems	Test Performed By:
		[ ]	[ ]	[ ]	[ ]	
		[ ]	[ ]	[ ]	[ ]	
		[ ]	[ ]	[ ]	[ ]	
		[ ]	[ ]	[ ]	[ ]	
		[ ]	[ ]	[ ]	[ ]	
		[ ]	[ ]	[ ]	[ ]	
		[ ]	[ ]	[ ]	[ ]	
		[ ]	[ ]	[ ]	[ ]	
		[ ]	[ ]	[ ]	[ ]	
		[ ]	[ ]	[ ]	[ ]	
		[ ]	[ ]	[ ]	[ ]	
		[ ]	[ ]	[ ]	[ ]	
		[ ]	[ ]	[ ]	[ ]	
		[ ]	[ ]	[ ]	[ ]	
		[ ]	[ ]	[ ]	[ ]	
		[ ]	[ ]	[ ]	[ ]	
		[ ]	[ ]	[ ]	[ ]	
		[ ]	[ ]	[ ]	[ ]	
		[ ]	[ ]	[ ]	[ ]	
		[ ]	[ ]	[ ]	[ ]	
		[ ]	[ ]	[ ]	[ ]	
		[ ]	[ ]	[ ]	[ ]	

NOT USED

2008 Nonresidential Compliance Forms *August 2009*

WATER SIDE SYSTEM REQUIREMENTS (Part 2 of 3) **MECH-2C**

PROJECT NAME: POLICE DEPARTMENT AHU REPLACEMENT — DATE: 10/15/2013

	WATER[2] SIDE SYSTEMS: Chillers, Towers, Boilers, Hydronic Loops						
Item or System Tags (i.e. AC-1, RTU-1, H-1, CT-1, etc...)[1]							
No. of Systems							
	Indicate Page Reference on Plans or Specification[3]						
MANDATORY MEASURES	*T-24 Sections*						
Equipment Efficiency	112(a)						
Pipe Insulation	123						
PRESCRIPTIVE MEASURES							
Cooling Tower Fan Controls	144(h)						
Cooling Tower Flow Controls	144(h)						
Variable Flow System Design	144(j)						
Chiller and Boiler Isolation	144(j)						
CHW and HHW Reset Controls	144(j)						
WLHP Isolation Valves	144(j)						
VSD on CHW, CW & WLHP Pumps >5HP	144(j)						
DP Sensor Location	144(j)						

1. *Tile Proposed equipment need to match the building plans schedule or specifications. If a requirement is not applicable, put "N/A" in the column next to applicable section.*
2. *For each chiller, cooling tower, boiler and hydronic loop (or groups of similar equipment) fill in the reference to sheet number and/or specification section and paragraph number where the required features are documented. If a requirement is not applicable, put "N/A" in the column next to applicable section.*

NOT USED

2008 Nonresidential Compliance Forms *MARCH 2010*

SERVICE HOT WATER & POOL/SPA REQUIREMENTS (Part 3 of 3) **MECH-2C**

PROJECT NAME: POLICE DEPARTMENT AHU REPLACEMENT — DATE: 10/15/2013

	Service Hot Water, Pool Heating						
Item or System Tags (i.e. WH-1, WHP, DHW, etc...)[1]							
No. of Systems							
	Indicate Page Reference on Plans' or Schedule[3]						
MANDATORY MEASURES	*T-24 Section*						
SERVICE HOT WATER							
Certified Water Heater	§111, §113 (a)						
Water Heater Efficiency	§113 (b)						
Service Water Heating Efficiency	§113 (c)						
Pipe Insulation	§123						
POOL AND SPA							
Pool and Spa Efficiency and Control	§114 (a)						
Pool and Spa Electric Resisting Heating	§114 (b) Exception						
Pool and Spa Installation	§114 (b)						
Pool Heater No Pilot Light	§115 (a)						
Spa Heater No Pilot Light	§115 (b)						
Pipe Insulation	§123						

1: *The Proposed equipment need to match the building plans schedule or specifications. If a requirement is not applicable, put "N/A" in the column next to the measure*
2: *For each water heater, pool heat and domestic water loop (or groups of similar equipment) fill in the reference to sheet number and/or specification section and paragraph number where the required features are documented. If a requirement is not applicable, put "N/A" in tile column.*

NOT USED

2008 Nonresidential Compliance Forms *August 2009*

CERTIFICATE OF COMPLIANCE and FIELD INSPECTION ENERGY CHECKLIST (Page 5 of 5) **MECH-1C**

Project Name: POLICE DEPARTMENT AHU REPLACEMENT — Date: 10/15/2013

Documentation Author's Declaration Statement

- I certify that this Certificate of Compliance documentation is accurate and complete.

Name:	CARL CRIZER	Signature:	
Company:	SALAS O'BRIEN ENGINEERS, INC.	Date:	10/15/2013
Address:	305 SOUTH 11TH ST.	If Applicable CEA# CEPE#	
City/State/Zip:	SAN JOSE, CA 95112	Phone:	(408)282-1500

Principal Mechanical Designer's Declaration Statement

- I am eligible under Division 3 of the California Business and Professions Code to accept responsibility for the mechanical design.
- This Certificate of Compliance identifies the mechanical features and performance specifications required for compliance with title 24, Parts 1 and 6 of the California Code of Regulations.
- The design features represented on this Certificate of Compliance are consistent with the information provided to document this design on the other applicable compliance forms, worksheet, calculations, plans and specifications submitted to the enforcement agency for approval with this building permit application.

Name:	CARL CRIZER	Signature:	
Company:	SALAS O'BRIEN ENGINEERS, INC.	Date:	10/15/2013
Address:	305 SOUTH 11TH ST.	License#	M35859
City/State/Zip	SAN JOSE, CA 95112	Phone:	(408)282-1500

Mandatory Measures

Indicate location on building plans of Note Block for Mandatory Measures

MECHANICAL COMPLIANCE FORMS & WORKSHEETS (check box If worksheet Is Included)

For detailed instructions on the use of this and all Energy Efficiency Standards compliance forms, refer to the 2008 Nonresidential Manual Note: The Enforcement Agency may require all forms to be incorporated on to the building plans.

[X]	MECH-1C	Certificate of Compliance Required on plans for all submittals.
[X]	MECH-2C	Mechanical Equipment Summary is required for all submittals.
[X]	MECH-3C	Mechanical Ventilation and Reheat is required for all submittals with mechanical ventilation.
[ ]	MECH-4C	Fan Power Consumption is required when for all prescriptive submittals.

2008 Nonresidential Compliance Forms *August 2009*

AIR SYSTEM REQUIREMENTS (Part 1 of 3) **MECH-2C**

Project Name: POLICE DEPARTMENT AHU REPLACEMENT — Date: 10/15/2013

	Indicate Air Systems Type (Central,Single Zone,Package,VAV or etc....)			
Item or System Tags (i.e. AC-1, RTU-1,HP-1)		AHU-1		
No.of Systems		1		
	Indicate Page Reference on the Plans or Schedule list or list information below			
MANDATORY MEASURES	*T-24 Sections*			
Heating Equipment Efficiency	112(a)	N/A		
Cooling Equipment Efficiency	112(a)	N/A		
HVAC or Heat Pump Thermostats	112(b), 112(c)	N/A		
Furnace Controls/Thermostat	112(c), 115(a)	N/A		
Natural Ventilation	121(b)	N/A		
Mechanical Ventilation	121(b)	N/A		
VAV Minimum Position Control	121(c)	N/A		
Demand Control Ventilation	121(c)	N/A		
Time Control	122(e)	N/A		
Setback and Setup Control	122(e)	N/A		
Outdoor Damper Control	122(f)	BY CONTROLS CONTRACTOR		
Isolation Zones	122(g)	N/A		
Pipe Insulation	123	M1.1		
Duct Insulation	124	M1.1		
PRESCRIPTIVE MEASURES				
Calculated Design Heating Load	144(a & b)	N/A		
Calculated Design Cooling Load	144(a & b)	N/A		
Fan Control	144(c)	BY CONTROLS CONTRACTOR		
DP Sensor Location	144(c)	BY CONTROLS CONTRACTOR		
Supply Pressure Reset (DDC only)	144(c)	N/A		
Simultaneous Heat/Cool	144(d)	N/A		
Economizer	144(e)	YES		
Heat and Cool Air Supply Reset	144(f)	YES		
Electric Resistance Heating	144(g)	N/A		
Heat Rejection System	§144(h)	N/A		
Air Cooled Chiller Limitation	§144(i)	N/A		
Duct Leakage Sealing.If Yes, a **MECH-4-A** must be submitted	144(k)	N/A		

1. *Total installed capacity (MBtu/hr) of all electric heat on this project exclusive of electric auxiliary heat for heat pumps. If electric heat is used explain which exception(s) to §144(g) apply.*

2008 Nonresidential Compliance Forms *August 2009*

EQUIPMENT LISTED ON SHEET M6.1 IS THE BASIS OF DESIGN FOR THE TITLE 24 CALCULATIONS. SUBSTITUTIONS WITH 'OR EQUAL' EQUIPMENT IS ACCEPTABLE. SEE SPECIFICATIONS FOR ADDITIONAL INFORMATION.

REGISTERED PROFESSIONAL ENGINEER — CARL A. CRIZER — No. M35859 — MECHANICAL — STATE OF CALIFORNIA

CITY OF SAN LEANDRO — INCORPORATED 1872

BEFORE YOU DIG, CALL UNDERGROUND SERVICE ALERT 811

IT SHALL BE THE CONTRACTOR'S RESPONSIBILITY TO DETERMINE THE EXISTENCE AND LOCATION OF ALL UNDERGROUND UTILITIES. THOSE SHOWN REPRESENT THE BEST INFORMATION AVAILABLE TO THE CITY OF SAN LEANDRO AT THE TIME OF PREPARATION OF THESE PLANS. NO GUARANTEE IS MADE AS TO THE ACCURACY OF THIS INFORMATION.

NO.	DATE	REVISION

DESIGNED BY		DATE
DRAWN BY	TP	DATE 07/24/14
PROJECT MGR.	MJG	DATE 7/31/14
TRANS ADMIN.	—	DATE —
SENIOR ENGR.		DATE 8/1/14
APPROVED BY:		DATE 8/4/14

CITY ENGINEER, R.C.E. No. 34870

CITY OF SAN LEANDRO

PUBLIC SAFETY
HVAC EQUIPMENT REPLACEMENT
MECHANICAL TITLE 24

M-0.2

AT FULL SIZE THIS LINE MEASURES 1"

SHEET 4 OF 23
JOB NO. 2013.0290
SCALE AS NOTED
DWG 3832 CASE 901

07/28/14 BID SET

K:\drawings\City of San Leandro\130340 Police Dept. AHU Replacement\130340M-0.2.DWG 7/31/2014 9:32 AM James Ajek

SCHEDULES

MECHANICAL VENTILATION AND REHEAT — MECH-3C

PROJECT NAME: POLICE DEPARTMENT AHU REPLACEMENT — DATE: 10/15/2013

	MECHANICAL VENTILATION §121(b)[a]								REHEAT LIMITATION §144(d)				
	AREA BASIS			OCCUPANCY BASIS					VAV Minimum				
A	B	C	D	E	F	G	H	I	J	K	L	M	N
Zone/ System	Condition Area (ft²)	CFM per ft²	Min CFM by Area B x C	Num of People	CFM per Person	Min CFM by Occupant E x F	REQ'D V.A. Max of D or G	Design Ventilation Air cfm	50% of Design Zone Supply cfm	B x 0.4 cfm/ft²	Max of Columns H, J, K 300 cfm	Design minimum Air setpoint	Transfer Air
AHU-1	17,252	0.15	2,588	138	15	2,070	2,588	2,588	10,000	6,901	10,000	10,000	7,412
					15								
					15								
					15								
					15								
					15								
					15								
					15								
					15								
					15								
					15								
					15								
			Totals	138			2,588	2,588	Column I Total Design Ventilation Air				7,412

C	*Minimum ventilation rate per Section §121, Table 121-A.*
E	*Based on fixed seat or the greater of the expected number of occupants and 50% of the CBC occupant load for egress purposes for spaces without fixed seating.*
H	*Required Ventilator Air (REQ'D V.A) is the larger of the ventilation rates calculated on an AREA BASIS or OCCUPANCY BASIS (Column D or G).*
I	*Must be greater than or equal to H, or use Transfer Air (column N) to make up the difference.*
J	*Design fan supply cfm(Fan CFM) x 50%; or the design zone outdoor air flow rate per §121.*
K	*Condition area (ft²)x 0.4 cfm/ft²;or*
L	*Maximum of Columns H, J, K, or 300 cfm*
M	*This must be less than or equal to Column L and greater than or equal to the sum of Columns H plus N*
N	*Transfer Air must be provided where the Required Ventilation Air (Column H) is greater than the Design Minimum Air(Column M). Where required, transfer air must be greater than or equal to the difference between the Required Ventilation Air (Column H) and the Design Minimum Air (Column M), Column H minus M.*

2008 Nonresidential Compliance Forms — *JULY 2010*

FAN POWER CONSUMPTION — MECH-4C

PROJECT NAME: POLICE DEPARTMENT AHU REPLACEMENT — DATE: 10/15/2013

NOTE: Provide one copy of this worksheet for each fan system with a total fan system horsepower greater than 25 hp for Constant Air Volume (CAV) Fan Systems or Variable Air Volume (VAV) Systems when using the Prescriptive Approach. See ***Power Consumption of fans*** *§144(c).*

A	B	C	D	E	F
FAN DESCRIPTION	DESIGN BRAKE HP	EFFICIENCY MOTOR	EFFICIENCY DRIVE	NUMBER OF FANS	PEAK WATTS BxEx746/ (CxD)
SF-1A	4.4	0.95	1	1	3,455
SF-1B	4.4	0.95	1	1	3,455
SF-1C	4.4	0.95	1	1	3,455
SF-1D	4.4	0.95	1	1	3,455
RF-1	8.76	0.95	0.96	1	7,166

Totals and Adjustments

FILTER PRESSURE ADJUSTMENT Equation 144-A in § 144(c) of the Energy Standards.	1) TOTAL FAN SYSTEM POWER (WATTS, SUM COLUMN F)	20,986	
A) If filter pressure drop (SPa) is greater than 1 inch W. C. or 245 Pascal then enter SPa on line 4. Enter Total Fan pressure drop across the fan (SPf)	2) SUPPLY DESIGN AIRFLOW (CFM)	20,000	
	3) TOTAL FAN SYSTEM POWER INDEX (Row 1 / Row2)[1]	1.04	W/CFM
B) Calculate Fan Adjustment and enter on line 6	4) SPa	0.00	
	5) SPr	0.00	
C) Calculate Adjusted Fan Power Index and enter on Row 7	6) Fan Adjustment 1-(SPa-1)/SPr	0.00	
	7) ADJUSTED FAN POWER INDEX (Line 3 x Line 6)[1]	1.04	W/CFM

1. TOTAL FAN SYSTEM POWER INDEX or ADJUSTED FAN POWER INDEX must not exceed 0.8 w/cfm for Constant Volume systems or 1.25 w/cfm for VAV systems.

2008 Nonresidential Compliance Forms — *August 2009*

MECHANICAL MANDATORY MEASURES: NONRESIDENTIAL — MECH-MM

Project Name: POLICE DEPARTMENT AHU REPLACEMENT — Date: 10/15/2013

Equipment and System Efficiencies	
§111:	Any appliance for which there is a California standard established in the Appliance Efficiency Regulations will comply with the applicable standard
§115(a):	Fan type central furnaces shall not have a pilot light
§123:	Piping, except that conveying fluids at temperatures between 60 and 105 degrees Fahrenheit, or within HVAC equipment ~ shall be insulated in accordance with Standards Section 123
§124:	Air handling duct systems shall be installed and insulated in compliance with Sections 601,602, 603,604, and 605 of the CMC Standards
Controls	
§122(e):	Each space conditioning system shall be installed with one of the following:
1A.	Each space conditioning system serving building types such as offices and manufacturing facilities (and all others not explicitly exempt from the requirements of Section 112 (d)) shall be installed with an automatic time switch with an accessible manual override that allows operation of the system during off-hours for up to 4 hours. The time switch shall be capable of programming different schedules for weekdays and weekends and have program backup capabilities that prevent the loss of the device's program and time setting for at least 10 hours if power is interrupted; or
1B.	An occupancy sensor to control the operating period of the system; or
1C.	A 4-hour timer that can he manually operated to control the operating period of the system
2.	Each space conditioning system shall be installed with controls that temporarily restart and temporarily operate the system as required to maintain a setback heating and/or a setup cooling thermostat setpoint
§ 122(g):	Each space conditioning system serving multiple zones with a combined conditioned floor area more than 25,000 square feet shall be provided with isolation zones. Each zone: shall not exceed 25,000 square feet; shall be provided with isolation devices, such as valves or dampers that allow the supply of heating or cooling to be setback or shut off independently of other isolation areas; and shall be controlled by a time control device as described above.
§ 122(c):	Thermostats shall have numeric setpoints in degrees Fahrenheit (F) and adjustable setpoint stops accessible only to authorized personnel.
§ 122(b):	Heat pumps shall be installed with controls to prevent electric resistance supplementary heater operation when the heating load can be met by the heat pump alone
§122(a&b):	Each space conditioning system shall be controlled by an individual thermostat that responds to temperature within the zone. Where used to control heating, the control shall be adjustable down to 55 degrees For lower . For cooling, the control shall be adjustable up to 85 degrees F or higher. Where used for both heating and cooling, the control shall be capable of providing a deadband of at least 5 degrees F within which the supply of heating and cooling is shut off or reduced to a minimum.
Ventilation	
§122(e):	Controls shall be provided to allow outside air dampers or devices to be operated at the ventilation rates as specified on these plans.
§122(f):	All gravity ventilating systems shall be provided with automatic or readily accessible manually operated dampers in all openings to the outside, except for combustion air openings.
§121(f):	Ventilation System Acceptance. Before an occupancy permit is granted for a newly constructed building or space, or a new ventilating system serving a building or space is operated for normal use, all ventilation systems serving the building or space shall be certified as meeting the Acceptance Requirements for Code Compliance
Service Water Heating Systems	
§113(c):	**Installation**
3.	Temperature controls for public lavatories. The controls shall limit the outlet Temperature to 110 ° F.
2.	Circulating service water-heating systems shall have a control capable of automatically turning off the circulating pump when hot water is not required.

M-0.3

REGISTERED PROFESSIONAL ENGINEER — CARL A. GRITZER — No. M35859 — MECHANICAL — STATE OF CALIFORNIA

CITY OF SAN LEANDRO — INCORPORATED 1872

BEFORE YOU DIG, CALL UNDERGROUND SERVICE ALERT 811

IT SHALL BE THE CONTRACTOR'S RESPONSIBILITY TO DETERMINE THE EXISTENCE AND LOCATION OF ALL UNDERGROUND UTILITIES. THOSE SHOWN REPRESENT THE BEST INFORMATION AVAILABLE TO THE CITY OF SAN LEANDRO AT THE TIME OF PREPARATION OF THESE PLANS. NO GUARANTEE IS MADE AS TO THE ACCURACY OF THIS INFORMATION.

NO.	DATE	REVISION

CITY OF SAN LEANDRO

DESIGNED BY ____ DATE ____
DRAWN BY TP DATE 07/24/14
PROJECT MGR. MJG DATE 7/31/14
TRANS ADMIN. ____ DATE ____
SENIOR ENGR. T.J. DATE 8/1/14
APPROVED BY ____ DATE 8/4/14
CITY ENGINEER, R.C.E. No. 34870

PUBLIC SAFETY
HVAC EQUIPMENT REPLACEMENT
MECHANICAL TITLE 24

AT FULL SIZE THIS LINE MEASURES 1"

SHEET 5 OF 23
JOB NO. 2013.0290
SCALE AS NOTED
DWG 3833 CASE 901

K:\drawings\City of San Leandro\130340 Police Dept. AHU Replacement\130340M-0.3.DWG 7/31/2014 9:31 AM James Ajak

07/28/14 BID SET

REFERENCE SHEET NOTES

MECHANICAL:

1. TEMPORARILY DISCONNECT & REMOVE THE OUTSIDE AIR LOUVER TO BRING IN NEW EQUIPMENT IF NECESSARY.
2. DEMOLISH AIR HANDLER AND ASSOCIATED PIPING + COILS. CONCRETE PAD TO REMAIN.
3. DISCONNECT & REMOVE THE <E> OUTSIDE AIR DAMPER.
4. CUT DUCT OFF AS CLOSE TO THE FLOOR AS POSSIBLE HEM EDGE TO PROVIDE A CLEAN EDGE.
5. DISCONNECT & REMOVE THIS CHILLED WATER PIPING.
6. DISCONNECT & REMOVE DUCT.
7. FILL ABANDONED FLOOR PENETRATIONS WITH GROUT. SEE 1/M5.3.
8. CONDUITS TO BE REMOVED BY OTHERS. FILL ABANDONED FLOOR PENETRATIONS WITH GROUT.
9. DISCONNECT & REMOVE THE ABANDONED FLUE. FILL ABANDONED HOLE AT FLOOR PER DETAIL 1/M5.3. DO NOT DISTURB THE ROOFING. LEAVE FLUE PIPE ABOVE THE ROOF. CAP AT THE DECK.
10. PROVIDE & INSTALL A TEMPORARY SUPPLY FAN. THIS FAN IS LISTED AS EF-4 ON THE SCHEDULE. THE CONTRACTOR SHALL MAKE A TEMPORARY TRANSITION TO FEED AIR FROM THE FAN INTO THE DUCT. THE CONTRACTOR SHALL ALSO PROVIDE BIRD SCREEN & FILTER MATERIAL TO KEEP CONSTRUCTION DUST OUT OF THE BUILDING. SEE THE "TEMPORARY COOLING" NOTES ON M-0.1 FOR FURTHER INFORMATION.

CONTROLS:

20. DISCONNECT & REMOVE ALL CONTROLS ASSOCIATED WITH THE AIR HANDLER.

FIRE SPRINKLER:

30. DISCONNECT & MODIFY FIRE SPRINKLER PIPING WHICH SHALL INTERFERE WITH THE NEW AIR HANDLER. ALL SPRINKLER HEADS INSIDE OF THE AIR HANDLER SHALL BE REMOVED & PIPES CAPPED.

GENERAL SHEET NOTES

A. ALL DUCTWORK DIMENSIONS ARE NET INSIDE DIMENSIONS.

B. CUT ALL BOLTS OFF BELOW FINISH FLOOR & GROUT OVER.

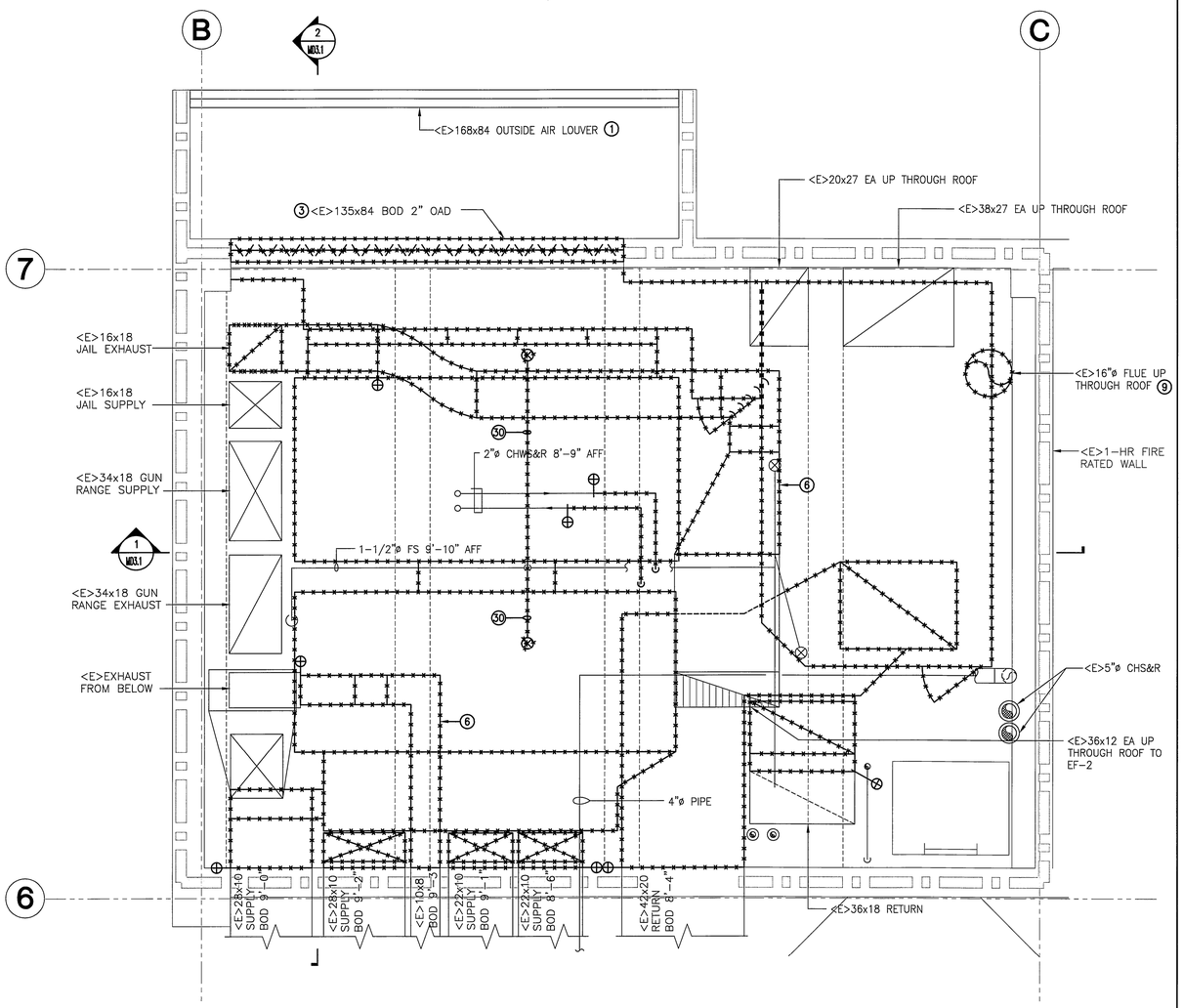

2 PARTIAL 2ND FLOOR PLAN UPPER VIEW - DEMO

SCALE: 1/2" = 1' - 0"

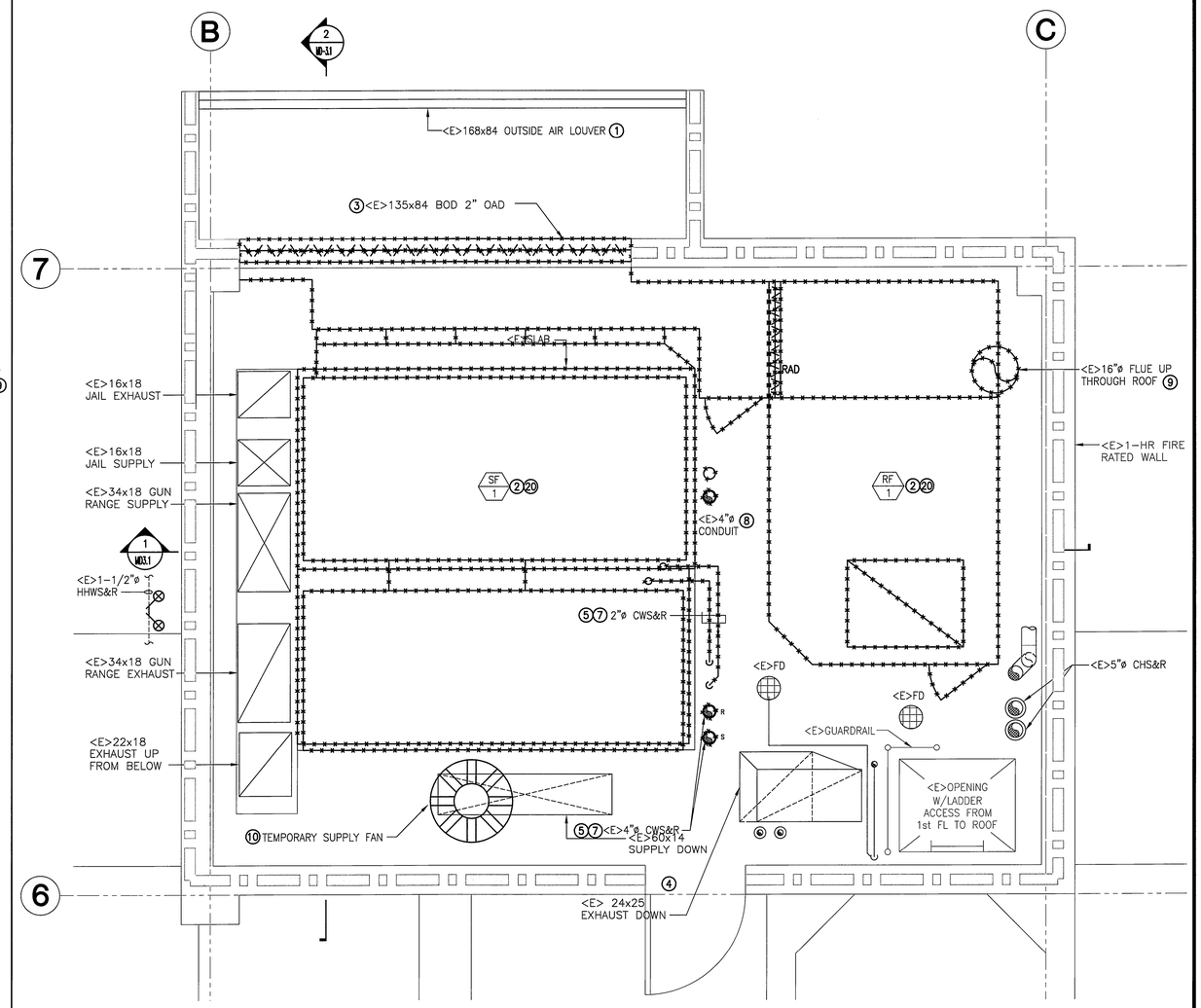

1 PARTIAL 2ND FLOOR PLAN LOWER VIEW - DEMO

SCALE: 1/2" = 1' - 0"

MD-1.1

REGISTERED PROFESSIONAL ENGINEER — CARL A. CRIZER — No. M35859 — MECHANICAL — STATE OF CALIFORNIA

CITY OF SAN LEANDRO — INCORPORATED 1872

BEFORE YOU DIG, CALL UNDERGROUND SERVICE ALERT 811

IT SHALL BE THE CONTRACTOR'S RESPONSIBILITY TO DETERMINE THE EXISTENCE AND LOCATION OF ALL UNDERGROUND UTILITIES. THOSE SHOWN REPRESENT THE BEST INFORMATION AVAILABLE TO THE CITY OF SAN LEANDRO AT THE TIME OF PREPARATION OF THESE PLANS. NO GUARANTEE IS MADE AS TO THE ACCURACY OF THIS INFORMATION.

NO.	DATE	REVISION

DESIGNED BY		DATE
DRAWN BY	TP	DATE 07/24/14
PROJECT MGR.	MTG	DATE 7/31/14
TRANS ADMIN.		DATE
SENIOR ENGR.		DATE 8/1/14
APPROVED BY:		DATE 8/1/14

CITY ENGINEER, R.C.E. No. 34870

CITY OF SAN LEANDRO

PUBLIC SAFETY
HVAC EQUIPMENT REPLACEMENT
MECHANICAL PARTIAL 2ND FLOOR PLANS - DEMO

AT FULL SIZE THIS LINE MEASURES 1"

SHEET 6 OF 23

JOB NO. 2013.0290

SCALE AS NOTED

DWG 3834 CASE 901

K:\drawings\City of San Leandro\130340 Police Dept. AHU Replacement\130340MD-1.1.DWG 7/31/2014 9:36 AM James Ajak

07/28/14 BID SET

REFERENCE SHEET NOTES

MECHANICAL:

1. PROVIDE & INSTALL NEW FAN ARRAY. SEE THE SCHEDULE ON M6.1.
2. PROVIDE & INSTALL THE BACK DRAFT DAMPERS SUPPLIED WITH THE SUPPLY FANS.
3. PROVIDE & INSTALL NEW AIR HANDLER PLENUM CASING. CASING TO BE DOUBLE WALL SHEET METAL WITH 2" MINIMUM INSULATION SANDWICHED BETWEEN SHEETMETAL. SEE "SYSTEM PRESSURE REQUIREMENTS" SCHEDULE ON M6.1 FOR DESIGN PRESSURE OF THE NEW PLENUM CEILING. SEE SPECIFICATION SECTION 233100 FOR PLENUM CONSTRUCTION REQUIREMENTS.
4. PROVIDE & INSTALL MAGNEHELIC & TUBING TO MEASURE FILTER PRESSURE DROP.
5. PROVIDE & INSTALL PLENUM DOOR. SEE SCHEDULE ON M6.1 & DETAIL 4/M5.1.
6. LABEL DOOR PER PLENUM DOOR SCHEDULE ON M6.1.
7. THIS SECTION OF EXHAUST DUCTWORK SHALL BE DOUBLE WALLED DUCT WITH 1" INSULATION.
8. VFD PROVIDED BY MECHANICAL & INSTALLED BY ELECTRICAL. THE VFD SHALL VE INSTALLED ON THE FIRST FLOOR. SEE THE ELECTRICAL DRAWINGS FOR THE LOCATION.
9. CORE SLAB FOR CHILLED WATER PIPES.
10. WELDED BAR GRATING. WITH 3/16"x 1-1/4" BEARING BARS WITH BARS ON 1-1/4" CENTERS & CROSS BARS ON 4" CENTERS. SUPPORT ALL AROUND WITH 1-1/2x1-1/2x1/4 ANGLE ON SIDES UP AGAINST CONCRETE & UNISTRUT ON SIDES WITH PLENUM PANEL. ANCHOR TO THE FLOOR WITH 3/8" HILTI TZ ANCHORS. AT 18" O.C. GRATING SHALL COVER DUCT IN FLOOR (NOT SHOWN FOR CLARITY). THIS BAR GRATING SHALL BE INSTALLED FLUSH WITH THE HOUSE KEEPING PAD (APPROXIMATELY 6" AFF).
11. PROVIDE & INSTALL CHILLED WATER COILS. SEE THE SCHEDULE ON M6.1. SEE DETAIL 1/M5.1 FOR MOUNTING & DETAIL 3/M5.2 FOR PIPING.
12. PROVIDE & INSTALL FILTRATION SYSTEM. SEE THE SCHEDULE ON M6.1.
13. INSTALL A NEW 3-WAY CHILLED WATER CONTROL VALVE. (PER 3/M5.2)
14. PROVIDE & INSTALL NEW OUTSIDE AIR CONTROL DAMPER. THE DAMPER ACTUATOR LOCATION SHALL BE ACCESSIBLE FROM INSIDE THE PLENUM. SEE SCHEDULE ON M6.1.
15. PROVIDE & INSTALL NEW RETURN AIR CONTROL DAMPER. THE DAMPER ACTUATOR LOCATION SHALL BE ACCESSIBLE FROM INSIDE THE PLENUM. SEE SCHEDULE ON M6.1.
16. PROVIDE & INSTALL NEW EXHAUST AIR CONTROL DAMPER. THE DAMPER ACTUATOR LOCATION SHALL BE ACCESSIBLE FROM INSIDE THE PLENUM. SEE SCHEDULE ON M6.1.
17. MODIFICATIONS TO THE CHILLED WATER PIPING SHALL BE REQUIRED BELOW THE SLAB. THIS AREA IS CONGESTED & THE CONTRACTOR IS ADVISED TO INSPECT THIS AREA PRIOR TO SUBMITTING THEIR BID.
18. ALL OF THE PLENUM PANELS SHALL BE PERFORATED PLENUM PANEL FOR SOUND ATTENUATION.
19. PROVIDE & INSTALL A FLEX CONNECTOR.
20. INSTALL HHW CONTROL VALVE SUCH THAT IT SHALL BE ABOVE THE PLENUM DOOR & SHALL NOT INTERFERE WITH IT'S OPENING.
21. PROVIDE & INSTALL HEATING HOT WATER COILS. SEE THE SCHEDULE ON M6.1. SEE DETAIL 1/M5.1 FOR MOUNTING & DETAIL 2/M5.3 FOR PIPING.
22. CORE THE SLAB FOR THE NEW HHW PIPES. THE PIPING IN THE BASEMENT IS NOT SHOWN. THE BASEMENT IS CONGESTED. IT SHALL BE THE CONTRACTORS RESPONSIBILITY TO DETERMINE THE BEST PIPE ROUTING IN THE BASEMENT.
23. ON THE FIRST FLOOR THERE IS A FLOOR DRAIN WHICH THE CONDENSATE DRAIN SHALL BE RUN TO. THE CONTRACTOR SHALL VERIFY THE DRAINS OPERATION & FLUSH, SNAKE THE LINE AS NECESSARY.
24. PROVIDE & INSTALL A 3-WAY DIVERTING VALVE IN THE HHWS PIPE. THE RETURN SHALL BE A TEE. ALL OF THE HHW WORK SHOWN AS DASHED IS BELOW THE SLAB.
26. STEEL SUPPORT FRAME, SEE STRUCTURAL SHEET S1.
27. MECHANICAL CONTRACTOR TO PROVIDE ISOLATORS. SEE STRUCTURAL FOR FURTHER INFORMATION.

CONTROLS:

30. ALL CONTROLS WORK SHALL BE BY THE CITY CONTRACTOR TO COORDINATE.
31. CITY TO CONNECT TO & PROGRAM THE NEW CONTROL VALVES. CONTRACTOR TO COORDINATE.

FIRE ALARM:

40. COORDINATE INSTALLATION OF PLENUM RATED, HIGH AIR VELOCITY PHOTOELECTRIC SMOKE DETECTOR IN THE SUPPLY & RETURN PLENUMS (AIR PRODUCTS & CONTROLS HS-100-P). ALL FIRE ALARM WORK SHALL BE A **DEFERRED SUBMITTAL BY CITY CONTRACTOR.** IF EITHER OF THESE SMOKE DETECTORS SENSE SMOKE THE FIRE ALARM SYSTEM SHALL SHUTDOWN THE AIR HANDLER & GENERATE AN ALARM.
41. PROVIDE & INSTALL THE FIRE ALARM INTERFACE PANEL DESCRIBED IN DETAIL 2/M5.3. THIS PANEL SHALL BE INSTALLED NEAR THE VFD'S ON THE FIRST FLOOR SEE THE ELECTRICAL DRAWINGS FOR THE LOCATION.

ADD ALTERNATE:

25. ADD ALTERNATE #1: PRIME & PAINT THE WALLS & CEILING OF THE SPACE KELLYMORE SWISS COFFEE. PREPARE THE FLOOR & EPOXY PAINT THE 2ND FLOOR MECHANICAL ROOM WITH 3 COATS OF EPOXY WITH A FINAL TOUCH UP COAT WITH WALNUT SHELLS OR SAND FOR A NON-SLIP SURFACE.

GENERAL SHEET NOTES

A. ALL DUCTWORK DIMENSIONS ARE NET INSIDE DIMENSIONS.

B. INSULATE ALL NEW CHWS&R PIPING WITH 1-1/2" FIBERGLASS INSULATION MINIMUM.

C. INSULATE ALL NEW HHWS&R PIPING WITH 1-1/2" FIBERGLASS INSULATION MINIMUM.

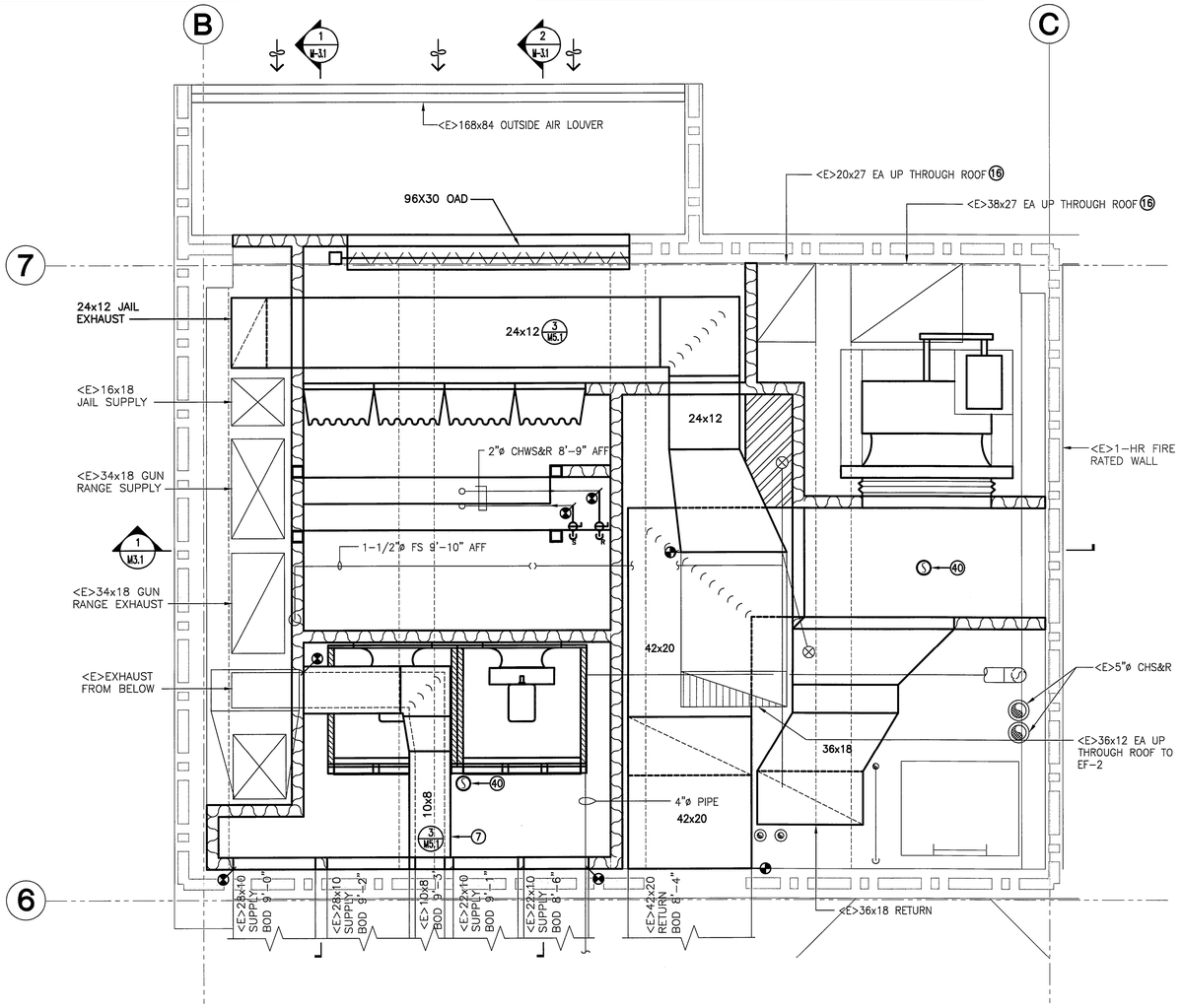

2 PARTIAL 2ND FLOOR PLAN UPPER VIEW - NEW
SCALE: 1/2" = 1' - 0"

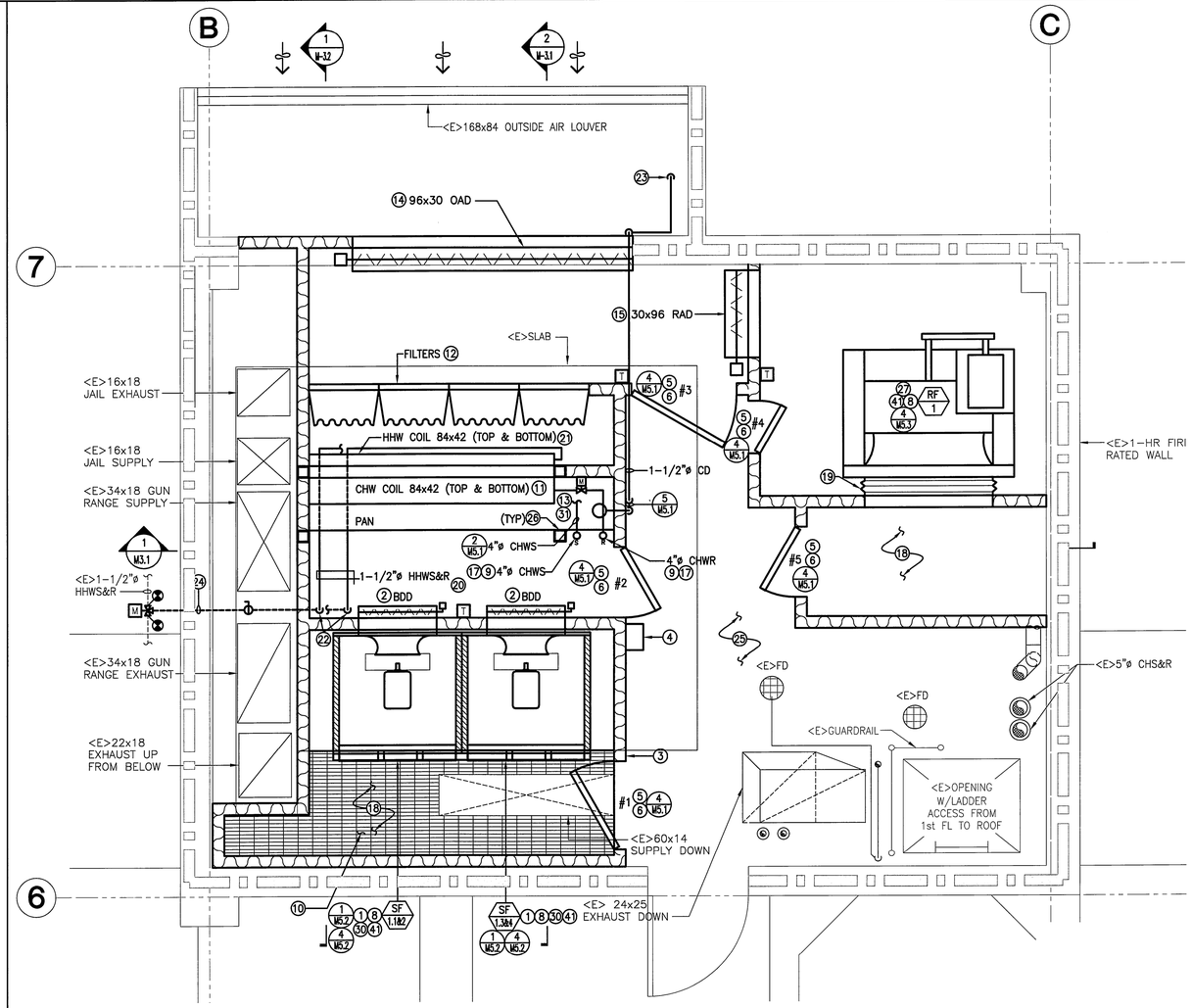

1 PARTIAL 2ND FLOOR PLAN LOWER VIEW - NEW
SCALE: 1/2" = 1' - 0"

M-1.1

REGISTERED PROFESSIONAL ENGINEER CARL A. CRITZER No. M35659 MECHANICAL STATE OF CALIFORNIA

CITY OF SAN LEANDRO INCORPORATED 1872

BEFORE YOU DIG, CALL UNDERGROUND SERVICE ALERT 811

IT SHALL BE THE CONTRACTOR'S RESPONSIBILITY TO DETERMINE THE EXISTENCE AND LOCATION OF ALL UNDERGROUND UTILITIES. THOSE SHOWN REPRESENT THE BEST INFORMATION AVAILABLE TO THE CITY OF SAN LEANDRO AT THE TIME OF PREPARATION OF THESE PLANS. NO GUARANTEE IS MADE AS TO THE ACCURACY OF THIS INFORMATION.

NO.	DATE	REVISION

DESIGNED BY		DATE
DRAWN BY	TP	DATE 07/24/14
PROJECT MGR.	NGT	DATE 7/31/14
TRANS ADMIN.		DATE
SENIOR ENGR.		DATE 8/1/14
APPROVED BY:		DATE 8/15/14

CITY ENGINEER, R.C.E. NO. 34870

CITY OF SAN LEANDRO

PUBLIC SAFETY
HVAC EQUIPMENT REPLACEMENT
MECHANICAL PARTIAL 2ND FLOOR PLANS - NEW

AT FULL SIZE THIS LINE MEASURES 1"

SHEET 7 OF 23
JOB NO. 2013.0290
SCALE AS NOTED
DWG 3835 CASE 901

K:\drawings\City of San Leandro\130340 Police Dept. AHU Replacement\130340M-1.1.DWG 7/31/2014 9:28 AM James Ajok

07/28/14 BID SET

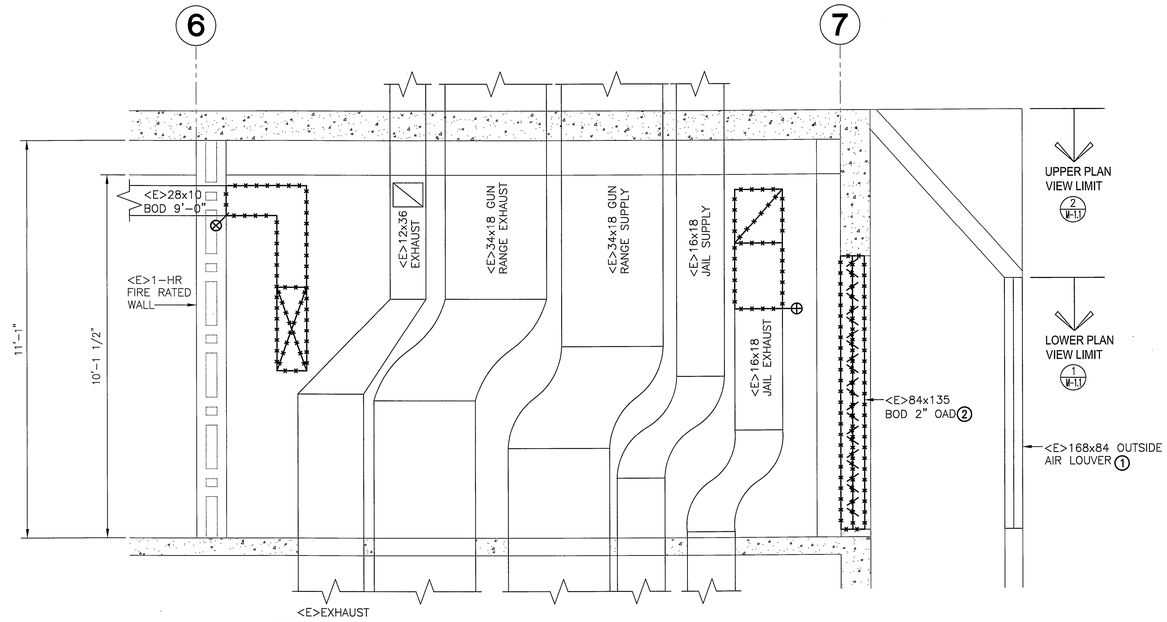

2 SECTION VIEW - DEMO

SCALE: 1/2" = 1' - 0"

0 2' 4'

GENERAL SHEET NOTES

A. ALL DUCTWORK DIMENSIONS ARE NET INSIDE DIMENSIONS.

B. CUT ALL BOLTS OFF BELOW FINISH FLOOR & GROUT OVER.

GENERAL SHEET NOTES

1. TEMPORARILY DISCONNECT & REMOVE THE OUTSIDE AIR LOUVER TO BRING IN NEW EQUIPMENT IF NECESSARY. REINSTALL WITHOUT DAMAGING.
2. DISCONNECT & REMOVE THE <E> OUTSIDE AIR DAMPER.

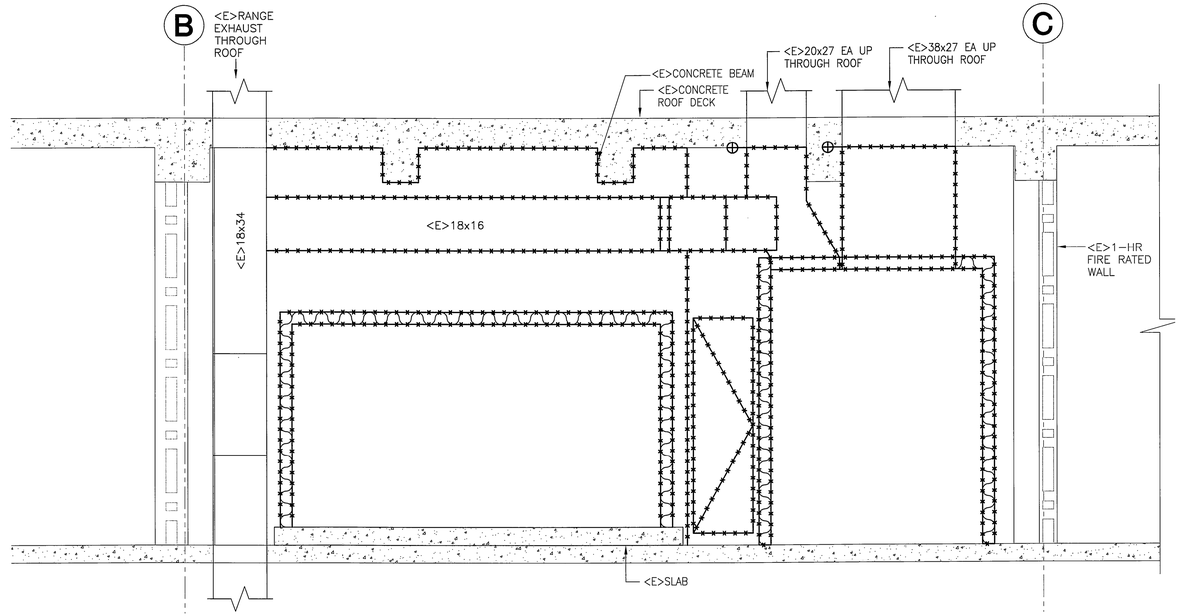

1 SECTION VIEW - DEMO

SCALE: 1/2" = 1' - 0"

0 2' 4'

REGISTERED PROFESSIONAL ENGINEER
CARL A. CRITZER
No. M35850
MECHANICAL
STATE OF CALIFORNIA

CITY OF SAN LEANDRO
INCORPORATED 1872

BEFORE YOU DIG, CALL UNDERGROUND SERVICE ALERT 811

IT SHALL BE THE CONTRACTOR'S RESPONSIBILITY TO DETERMINE THE EXISTENCE AND LOCATION OF ALL UNDERGROUND UTILITIES. THOSE SHOWN REPRESENT THE BEST INFORMATION AVAILABLE TO THE CITY OF SAN LEANDRO AT THE TIME OF PREPARATION OF THESE PLANS. NO GUARANTEE IS MADE AS TO THE ACCURACY OF THIS INFORMATION.

NO.	DATE	REVISION

CITY OF SAN LEANDRO

DESIGNED BY		DATE
DRAWN BY	TP	DATE 07/24/14
PROJECT MGR.	MJG	DATE 7/31/14
TRANS ADMIN.	—	DATE —
SENIOR ENGR.		DATE 8/1/14
APPROVED BY		DATE 8/5/14

CITY ENGINEER, R.C.E. No. 34870

PUBLIC SAFETY
HVAC EQUIPMENT REPLACEMENT
MECHANICAL SECTION VIEWS - DEMO

MD-3.1

AT FULL SIZE
THIS LINE MEASURES 1"

SHEET 8 OF 23

JOB NO. 2013.0290

SCALE AS NOTED

DWG 3836 CASE 901

K:\drawings\City of San Leandro\130340 Police Dept. AHU Replacement\130340MD-3.1.DWG 7/31/2014 9:43 AM James Ajak

07/28/14 BID SET

GENERAL SHEET NOTES

A. ALL DUCTWORK DIMENSIONS ARE NET INSIDE DIMENSIONS.

B. INSULATE ALL NEW CHWS&R PIPING WITH 1-1/2" FIBERGLASS INSULATION MINIMUM.

C. INSULATE ALL NEW HHWS&R PIPING WITH 1-1/2" FIBERGLASS INSULATION MINIMUM.

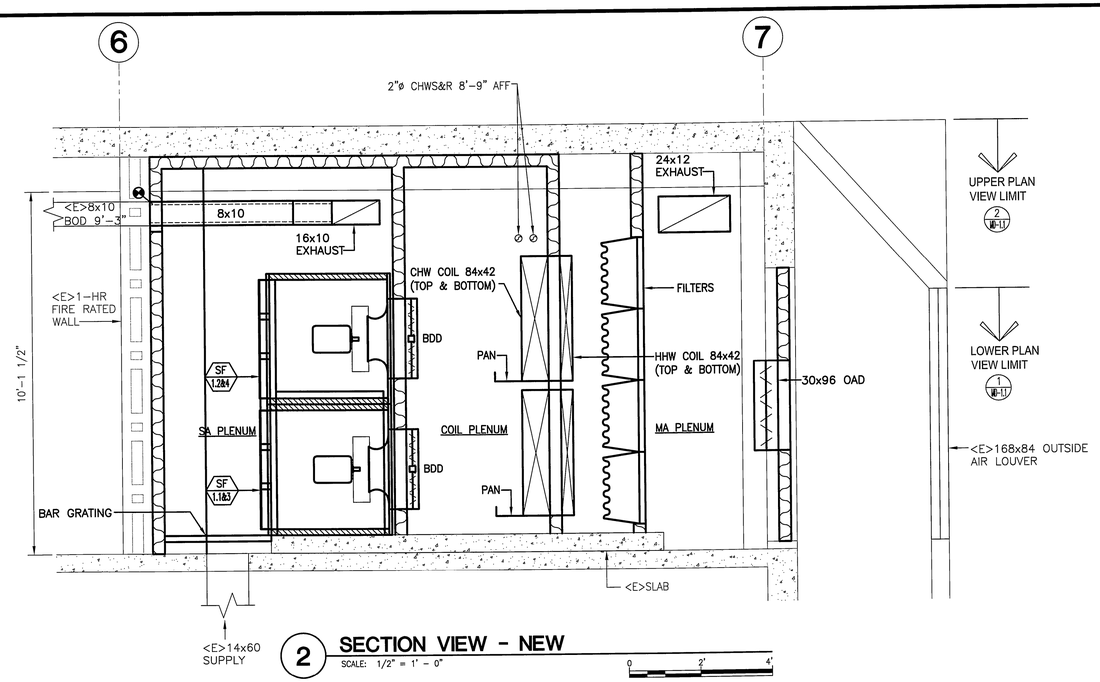

2 SECTION VIEW - NEW
SCALE: 1/2" = 1' - 0"
0 2' 4'

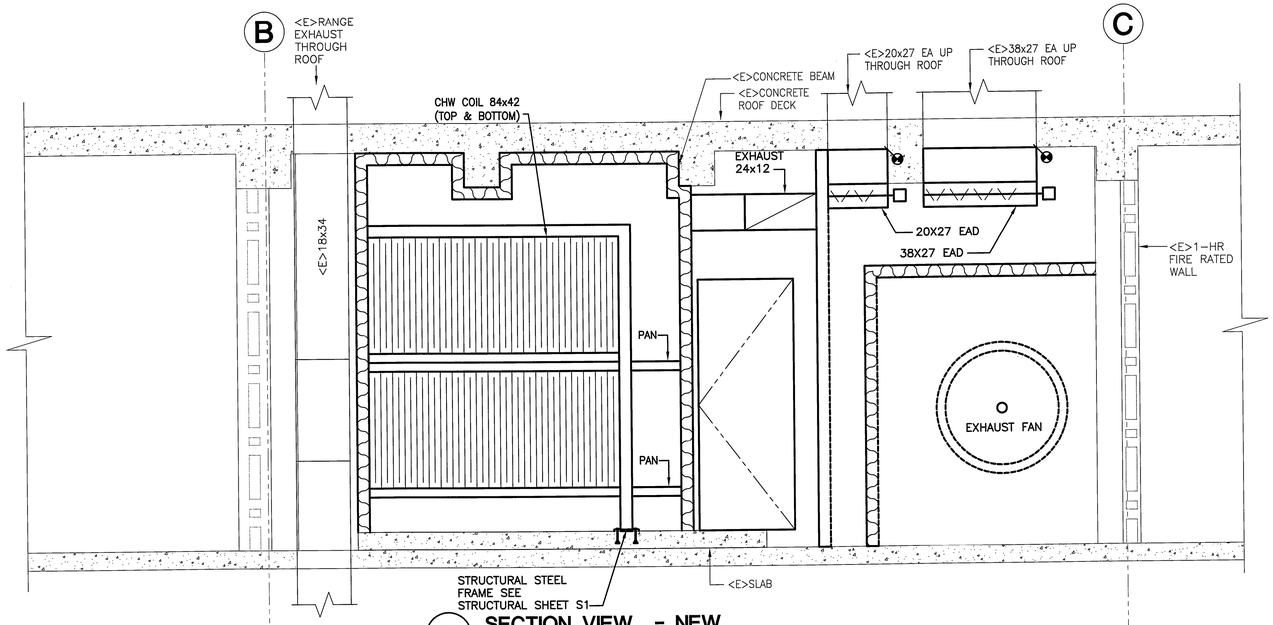

1 SECTION VIEW - NEW
SCALE: 1/2" = 1' - 0"
0 2' 4'

M-3.1

REGISTERED PROFESSIONAL ENGINEER CARL A. CRITZER No. M35650 MECHANICAL STATE OF CALIFORNIA

CITY OF SAN LEANDRO INCORPORATED 1872

BEFORE YOU DIG, CALL UNDERGROUND SERVICE ALERT B11

IT SHALL BE THE CONTRACTOR'S RESPONSIBILITY TO DETERMINE THE EXISTENCE AND LOCATION OF ALL UNDERGROUND UTILITIES. THOSE SHOWN REPRESENT THE BEST INFORMATION AVAILABLE TO THE CITY OF SAN LEANDRO AT THE TIME OF PREPARATION OF THESE PLANS. NO GUARANTEE IS MADE AS TO THE ACCURACY OF THIS INFORMATION.

NO.	DATE	REVISION

CITY OF SAN LEANDRO

DESIGNED BY		DATE	
DRAWN BY	TP	DATE	07/24/14
PROJECT MGR.	MGG	DATE	7/31/14
TRANS ADMIN.		DATE	
SENIOR ENGR.	J.J.	DATE	8/1/14
APPROVED BY:		DATE	8/4/14
CITY ENGINEER, A.C.E. No. 34870			

PUBLIC SAFETY
HVAC EQUIPMENT REPLACEMENT
MECHANICAL SECTION VIEWS - NEW

AT FULL SIZE THIS LINE MEASURES 1"

SHEET 9 OF 23
JOB NO. 2013.0290
SCALE AS NOTED
DWG 3837 CASE 901

07/28/14 BID SET

K:\drawings\City of San Leandro\130340 Police Dept. AHU Replacement\130340M-3.1.DWG 7/31/2014 9:27 AM James Ajok

GENERAL SHEET NOTES

A. ALL DUCTWORK DIMENSIONS ARE NET INSIDE DIMENSIONS.

B. INSULATE ALL NEW CHWS&R PIPING WITH 1-1/2" FIBERGLASS INSULATION MINIMUM.

C. INSULATE ALL NEW HHWS&R PIPING WITH 1-1/2" FIBERGLASS INSULATION MINIMUM.

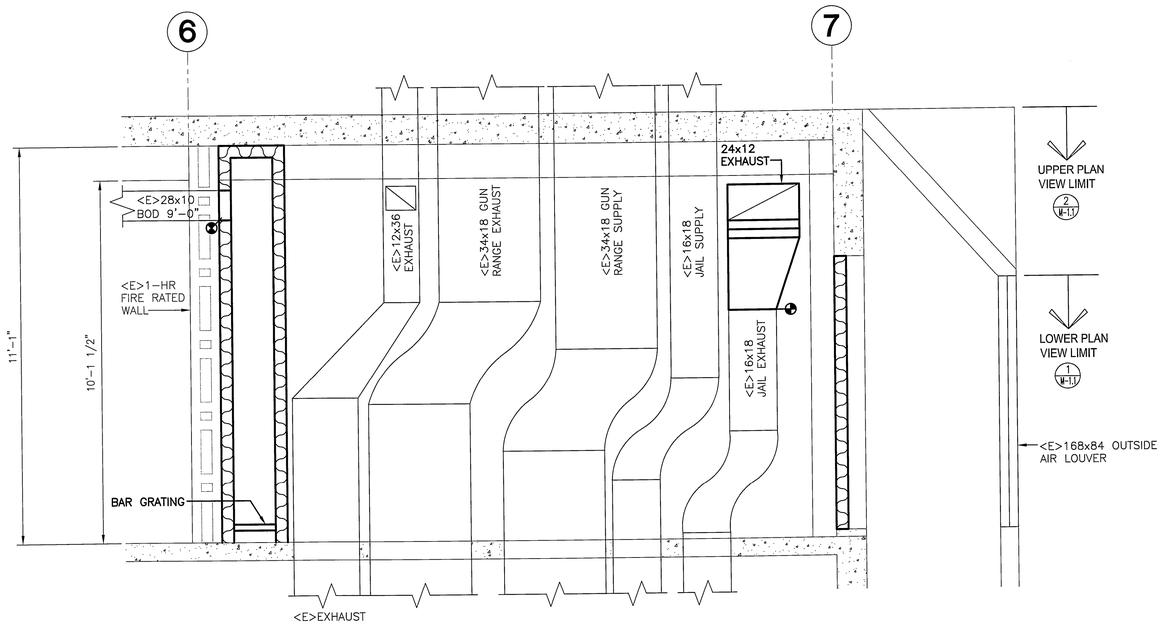

1 **SECTION VIEW - NEW**

SCALE: 1/2" = 1' - 0"

0 2' 4'

REGISTERED PROFESSIONAL ENGINEER
CARL A. GRITZER
No. M35659
MECHANICAL
STATE OF CALIFORNIA

CITY OF SAN LEANDRO
INCORPORATED 1872

BEFORE YOU DIG, CALL UNDERGROUND SERVICE ALERT 811

IT SHALL BE THE CONTRACTOR'S RESPONSIBILITY TO DETERMINE THE EXISTENCE AND LOCATION OF ALL UNDERGROUND UTILITIES. THOSE SHOWN REPRESENT THE BEST INFORMATION AVAILABLE TO THE CITY OF SAN LEANDRO AT THE TIME OF PREPARATION OF THESE PLANS. NO GUARANTEE IS MADE AS TO THE ACCURACY OF THIS INFORMATION.

NO.	DATE	REVISION

CITY OF SAN LEANDRO

DESIGNED BY		DATE
DRAWN BY	TP	DATE 07/24/14
PROJECT MGR.	MGG	DATE 7/31/14
TRANS ADMIN.	—	DATE —
SENIOR ENGR.	J.J.	DATE 8/1/14
APPROVED BY:		DATE 8/4/14
CITY ENGINEER, R.C.E. No. 34870		

PUBLIC SAFETY
HVAC EQUIPMENT REPLACEMENT
MECHANICAL SECTION VIEW - NEW

M-3.2

M-3.2

AT FULL SIZE
THIS LINE MEASURES 1"

SHEET 10 OF 23

JOB NO. 2013.0290

SCALE AS NOTED

DWG 3838 CASE 901

07/28/14 BID SET

K:\drawings\City of San Leandro\130340 Police Dept. AHU Replacement\130340M-3.2.DWG 7/31/2014 9:35 AM James Ajok

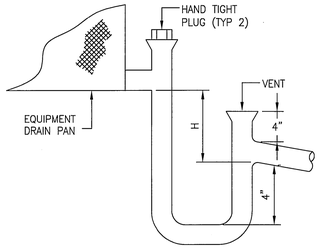

NOTE: H = FAN INLET STATIC + 1"

5 CONDENSATE TRAP DETAIL

SCALE: N.T.S.

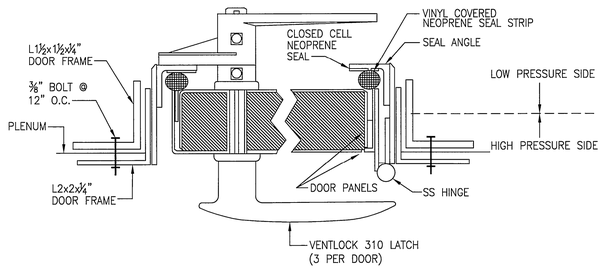

4 PLENUM DOOR DETAIL

SCALE: N.T.S.

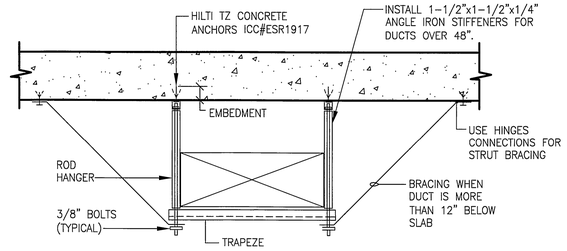

NOTE: PROVIDE SUPPORTS AT 10'-0" MAXIMUM ON CENTER

DUCT WIDTH	TRAPEZE	HANGER ROD	CONCRETE ANCHOR	EMBEDMENT	BRACING	ANCHOR RATING W/O S.I.
UP TO 48"	1-5/8X12 GA	3/8"	3/8"	2"	1/4 AIRCRAFT CABLE	565 #
49" TO 84"	2-1/8X12 GA	1/2"	1/2"	3-1/4"	1-5/8 STRUT	875 #
85" TO 120"	DOUBLE 1-5/8"X12	5/8"	5/8"	4"	1-5/8 STRUT	1,125 #

NOTE: PROVIDE TRANSVERS & LATERAL BRACING AT 40 FT. MAXIMUM ON CENTER.

3 DUCT MOUNTING DETAIL

SCALE: N.T.S.

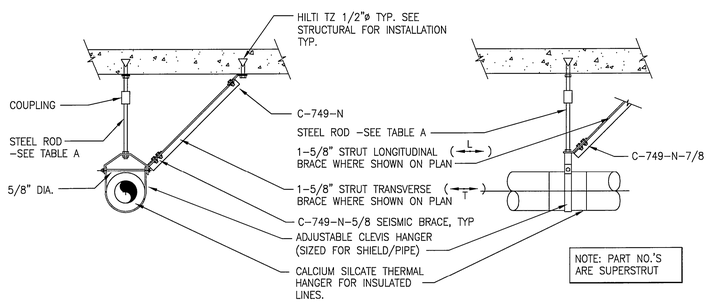

TABLE A

NOMINAL PIPE SIZE (INCHES)	SUPPORT ROD SIZE AND MAXIMUM LOAD PER ROD			MAXIMUM PIPE SPAN (FEET)
	ANCHOR & ROD SIZE (INCHES)	EMBEDMENT (INCHES)	MAX SIZE (POUNDS)	STEEL
3/8 to 3/4	3/8	3-1/2	610	5
1	3/8	3-1/2	610	5
1-1/4	3/8	3-1/2	610	5
1-1/2	3/8	3-1/2	610	5
2	3/8	3-1/2	610	10
2-1/2	3/8	3-1/2	610	10
3	3/8	3-1/2	610	10
4	1/2	4-3/4	1130	10
6	5/8	5-1/2	1810	10
8	3/4	6-1/2	2710	10
10	3/4	6-1/2	2710	10

NOTES:

PIPE SHALL NOT HAVE POCKETS FORMED IN THE SPAN DUE TO SAGGING OF THE PIPE BETWEEN SUPPORTS CAUSED BY THE WEIGHT OF THE PIPE, MEDIUM IN THE PIPE, INSULATION, VALVES, AND FITTINGS.

PROVIDE A MINIMUM OF ONE PIPE HANGER PER PIPE LENGTH.

PIPE HANGER AND SUPPORT SELECTION SHALL BE AS SHOWN ON DRAWINGS AND SHALL BE IN ACCORDANCE WITH SPECIFICATION SECTION 232113.

THE CONTRACTOR SHALL PROVIDE SUBMITTALS WHICH DEMONSTRATE THAT WHAT IS PROVIDED IS CONSISTENT WITH THE ITEMS LISTED. STRUCTURAL CALCULATIONS ARE NOT REQUIRED AS A PART OF THE SUBMITTAL PACKAGE.

2 PIPE SUPPORT DETAIL

SCALE: N.T.S.

CHILLED WATER COIL SUMMARY	
COIL ARRANGEMENT	TWO COILS STACKED VERTICALLY
COIL FACE WIDTH	84"
COIL FACE HEIGHT	42"
WEIGHT WITH WATER	970 LBS TOTAL (485 LBS EACH)

NOTE:

SEE DETAILS 7/S1 FOR STRUCTURAL STEEL.

1. ALL ATTACHMENT HARDWARE SHALL BE STAINLESS STEEL.
2. ALL STEEL SHALL BE HOT DIPPED GALVANIZED

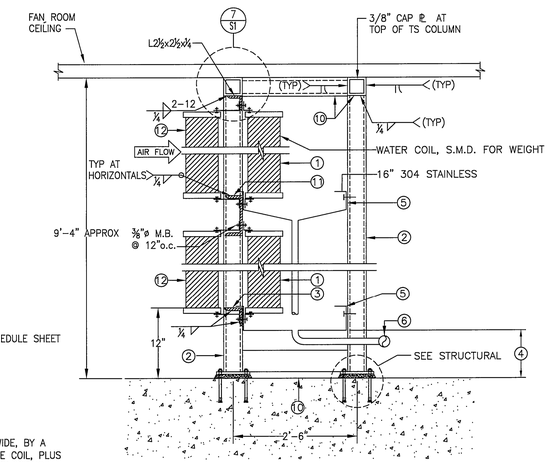

DETAIL REFERENCE NOTES:

1. NEW CHILLED WATER COIL. SEE CHILLED WATER COIL SCHEDULE ON MECHANICAL SCHEDULE SHEET (M-6.1) FOR DIMENSIONS & WEIGHT.
2. TUBE STEEL FRAME SEE STRUCTURAL.
3. STEEL ANGLE IRON SEE STRUCTURAL.
4. 9" MINIMUM AT PAN LOW POINT.
5. 16 GAGE TYPE 304 STAINLESS STEEL CONDENSATE DRAIN PAN. PAN SHALL BE 24" WIDE, BY A MINIMUM OF 3" DEEP. THE LENGTH OF THE PAN SHALL BE THE FULL LENGTH OF THE COIL, PLUS WHAT EVER DISTANCE THERE IS UNINSULATED PIPING AT EITHER END. ALL UNINSULATED PIPING HEADERS, VALVES, OR FITTINGS SHALL BE LOCATED OVER THE CONDENSATE DRAIN PAN. THE DRAIN PAN SHALL SLOPE TO A LOW POINT. DRAIN CONNECTION SHALL BE 1-1/4" MINIMUM. TOP EDGES OF THE PAN SHALL BE HEMMED FOR STRENGTH. ALL CORNERS SHALL BE WELDED & GROUND SMOOTH.
6. 1-1/4" COPPER CONDENSATE DRAIN LINE. SEE PLAN VIEWS FOR ROUTING. ALL CONDENSATE PIPING MUST BE ACCESSIBLE FOR CLEANING. PROVIDE UNIONS, & CLEANOUTS AS REQUIRED.
7. FRAMING STRUT TO SUPPORT THE BACK SIDES OF THE DRAIN PANS. INSTALL AT 5 FEET ON CENTER MAXIMUM.
8. AIR HANDLER PLENUM CASING.
9. FILL IN THE AREAS BETWEEN THE AIR HANDLER PLENUM CASING, & THE COIL FACE WITH DOUBLE WALL, INSULATED PLENUM WALL PANEL, & SEAL AIR TIGHT TO PREVENT AIR BYPASS AROUND THE COIL (NOT SHOWN IN THIS VIEW).
10. TUBE STEEL FRAME SEE STRUCTURAL.
11. STEEL C-CHANNEL SEE STRUCTURAL.
12. NEW HEATING WATER COIL. SEE HEATING WATER COIL SCHEDULE ON MECHANICAL SCHEDULE SHEET FOR DIMENSIONS & WEIGHT.

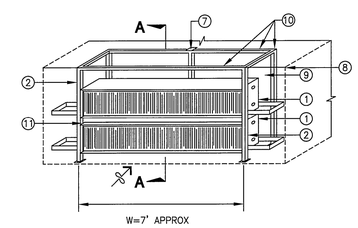

1 CHILLER WATER COIL MOUNTING DETAIL

SCALE: N.T.S.

M-5.1

REGISTERED PROFESSIONAL ENGINEER
CARL A. CRITZER
No. M35659
MECHANICAL
STATE OF CALIFORNIA

CITY OF SAN LEANDRO
INCORPORATED 1872

BEFORE YOU DIG, CALL UNDERGROUND SERVICE ALERT 811

IT SHALL BE THE CONTRACTOR'S RESPONSIBILITY TO DETERMINE THE EXISTENCE AND LOCATION OF ALL UNDERGROUND UTILITIES. THOSE SHOWN REPRESENT THE BEST INFORMATION AVAILABLE TO THE CITY OF SAN LEANDRO AT THE TIME OF PREPARATION OF THESE PLANS. NO GUARANTEE IS MADE AS TO THE ACCURACY OF THIS INFORMATION.

NO.	DATE	REVISION

CITY OF SAN LEANDRO

DESIGNED BY		DATE
DRAWN BY	TP	DATE 07/24/14
PROJECT MGR.	MTG	DATE 7/31/14
TRANS ADMIN.	—	DATE —
SENIOR ENGR.	T.J.	DATE 8/1/14
APPROVED BY		DATE 8/01/14

CITY ENGINEER, R.C.E. No. 34870

PUBLIC SAFETY
HVAC EQUIPMENT REPLACEMENT
MECHANICAL DETAILS

AT FULL SIZE
THIS LINE MEASURES 1"

SHEET 11 OF 23

JOB NO. 2013.0290

SCALE AS NOTED

DWG 3839 CASE 901

K:\drawings\City of San Leandro\130340 Police Dept. AHU Replacement\130340M-5.1.DWG 7/31/2014 9:42 AM James Ajok

07/28/14 BID SET

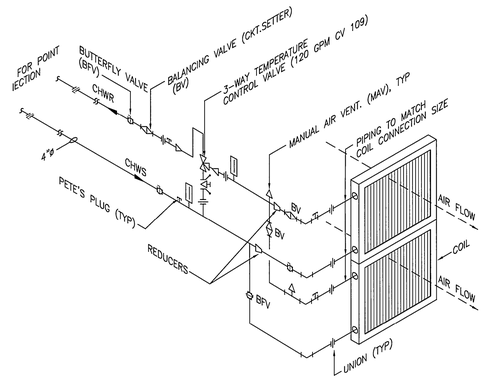

3 CHILLED WATER COIL PIPING DETAIL

SCALE: N.T.S.

REFERENCE DETAIL NOTES

ELECTRICAL:

1. NEW VARIABLE FREQUENCY DRIVE (VFD).
2. NEW FUSED DISCONNECT SWITCH.
3. POWER WIRING, SEE PARTIAL ONE LINE DIAGRAM.
4. VFD DRIVE MANUFACTURE REPRESENTATIVE WILL SET THE MOTOR OVERLOAD PROTECTION TO MATCH THE FAN ARRAY MOTORS. SUBMIT SETTING POINT WITH RECORD DRAWING MARKUPS.

CONTROLS: (NOT IN CONTRACT, BY CITY)

20. ALL CONTROLS CONNECT TO THE VFD TO REMAIN.
21. CITY CONTROLS CONTRACTOR TO PROVIDE & INSTALL CT'S TO MONITOR FAN STATUS.

FIRE ALARM: (NOT IN CONTRACT, BY CITY)

30. INSTALL <N> RELAY IN PANEL 'F.A.I.P.' – SEE 3/M5.3.
31. CONTRACTOR TO INSTALL FIRE ALARM SHUTDOWN WIRING. REMOVE JUMPER & WIRE ACROSS "EXTERNAL SAFETY DEVICE" CONTACTS. VERIFY THAT THE CONTACTS USED WILL SHUT THE FAN DOWN IN NORMAL AND BYPASS MODES. WIRES SHALL BE TERMINATED IN THE VFD BY THE MANUFACTURE REPRESENTATIVE.

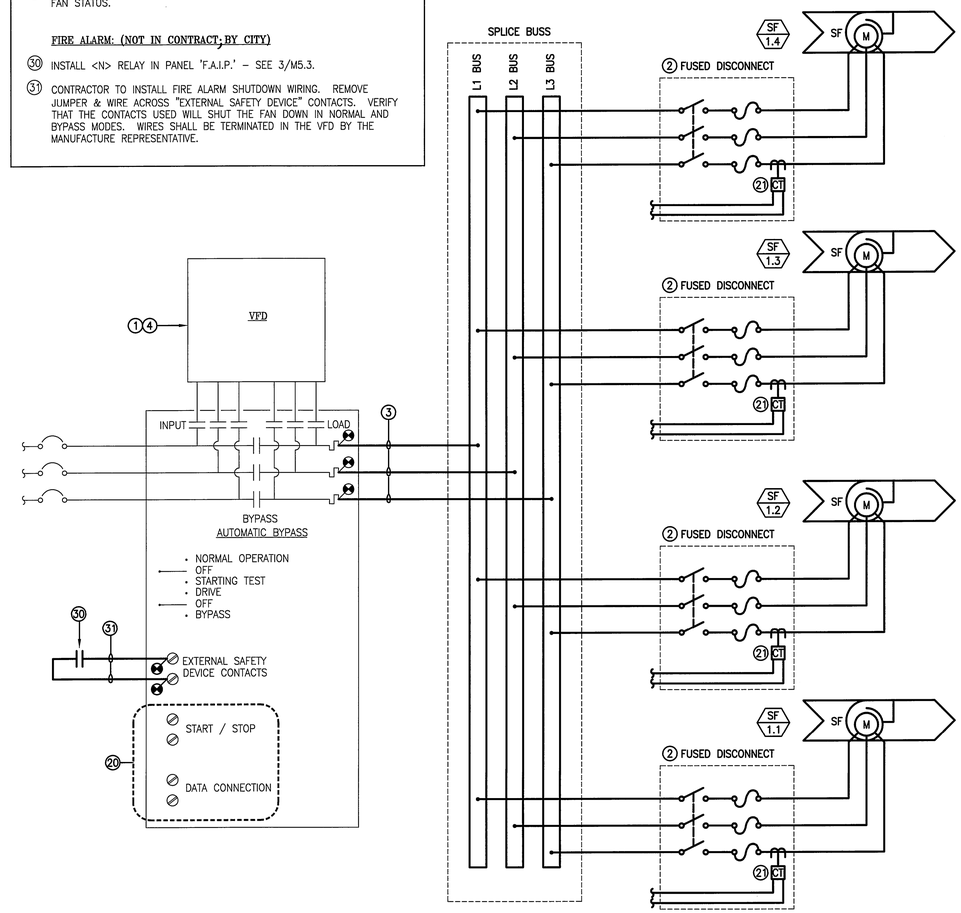

1 FAN ARRAY WIRING DIAGRAM

SCALE: N.T.S.

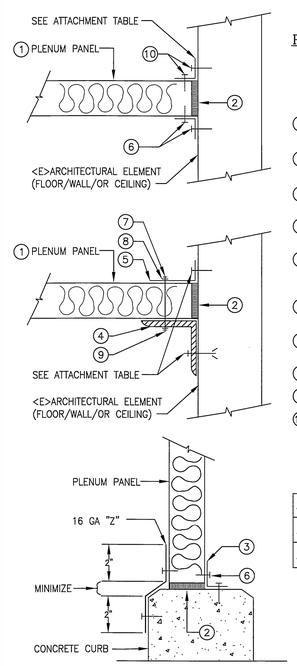

PLENUM PANEL ATTACHMENT DETAIL:

THE DETAILS ON THIS SHEET ARE A MINIMUM REQUIREMENT. INSTALL ANY ADDITIONAL ATTACHMENTS AS NEEDED TO MEET CONTRACTOR'S PLENUM PANEL MANUFACTURER RECOMMENDATION:

1. FRAME ALL PLENUM CEILING OPENINGS WITH MIN. L2"x2"x1/4". EXTEND FRAMING TO PLENUM WALLS.
2. SET PANELS IN A CONTINUOUS FULL BEAD OF SEALANT TO SEAL AIR TIGHT.
3. INSTALL 2 X 2 X 16 GA ANGLE ON BOTH SIDES OF PLENUM PANEL UNLESS NOTED OTHERWISE.
4. WHERE A STRUCTURAL ANGLE IS NEEDED TO FRAME OPENINGS, DELETE THE 16 GA ANGLE, AND INSTALL THE STRUCTURAL ANGLE ON ONE SIDE.
5. ON THE SIDE OPPOSITE THE STRUCTURAL ANGLE, INSTALL A 16 GA ANGLE. ONE LEG OF THE ANGLE SHALL BE THE SAME LENGTH AS THE STRUCTURAL ANGLE. THE OTHER LEG SHALL BE 2".
6. #10 SCREWS AT 12" ON CENTER FOR ALL ATTACHMENTS OF 16 GA ANGLE TO PLENUM PANEL.
7. 3/8 THROUGH BOLT AT ATTACHMENTS OF STRUCTURAL ANGLE TO PLENUM PANEL.
8. FLAT WASHER.
9. FLAT AND LOCK WASHER.
10. WHERE EVER POSSIBLE, LOCATE FASTENERS ADJACENT TO ONE ANOTHER (OR AS CLOSE TO ONE ANOTHER AS POSSIBLE).

ATTACHMENT TABLE:

ATTACHMENT OF:	CONCRETE SLAB OR CURB	FRAME WALL
2x2x16 GA. ANGLE	1/4x1-1/2 LEAD EXP ANCHOR @ 12" ON CENTER	#10 SCREWS INTO EACH STUD
ANGLE IRON	3/8x2-1/2" EMBED, K.B. III AT 24" ON CENTER	#12 SCREWS INTO EACH STUD (NON-BEARING ONLY)

2 PLENUM PANEL ATTACHMENT DETAIL

SCALE: N.T.S.

GENERAL DETAIL NOTES:

1. ALSO SEE DETAILS 2/S1.1 WHICH TAKES PRIORITY OVER THIS DETAIL.
2. ALL STEEL SHALL BE HOT DIPPED GALVANIZED.
3. ALL HARDWARE SHALL BE STAINLESS STEEL.

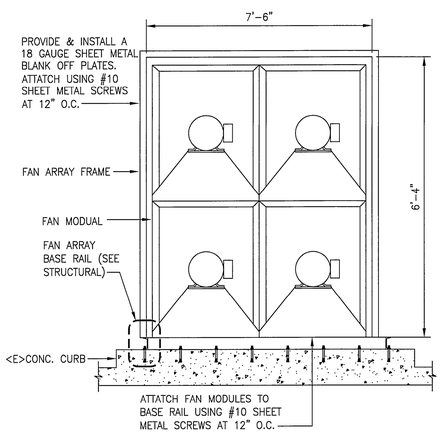

4 SUPPLY FAN MOUNTING DETAIL

SCALE: N.T.S.

REGISTERED PROFESSIONAL ENGINEER CARL A. CRITZER No. M35859 MECHANICAL STATE OF CALIFORNIA

CITY OF SAN LEANDRO INCORPORATED 1872

BEFORE YOU DIG, CALL UNDERGROUND SERVICE ALERT 811

IT SHALL BE THE CONTRACTOR'S RESPONSIBILITY TO DETERMINE THE EXISTENCE AND LOCATION OF ALL UNDERGROUND UTILITIES. THOSE SHOWN REPRESENT THE BEST INFORMATION AVAILABLE TO THE CITY OF SAN LEANDRO AT THE TIME OF PREPARATION OF THESE PLANS. NO GUARANTEE IS MADE AS TO THE ACCURACY OF THIS INFORMATION.

NO.	DATE	REVISION

DESIGNED BY		DATE
DRAWN BY	TP	DATE 07/24/14
PROJECT MGR.	MJG	DATE 7/30/14
TRANS ADMIN.	—	DATE —
SENIOR ENGR.	J.J.	DATE 8/1/14
APPROVED BY:		DATE 8/1/14
CITY ENGINEER, R.C.E. No. 34870		

CITY OF SAN LEANDRO

PUBLIC SAFETY HVAC EQUIPMENT REPLACEMENT
MECHANICAL DETAILS

M-5.2

AT FULL SIZE THIS LINE MEASURES 1"

SHEET 12 OF 23

JOB NO. 2013.0290

SCALE AS NOTED

DWG 3840 CASE 901

K:\drawings\City of San Leandro\130340 Police Dept. AHU Replacement\130340M-5.2.DWG 7/31/2014 9:41 AM James Ajok

07/28/14 BID SET

REFERENCE DETAIL NOTES:

1. VARIABLE FREQUENCY DRIVE (VFD).
2. DISCONNECT SWITCH WITH POWER RELAY AT INDIVIDUAL FAN MOTOR.
3. THE ELECTRICAL CONTRACTOR SHALL INSTALL INTERLOCK WIRING. CONTROLS CONTRACTOR SHALL PAY A FIELD REPRESENTATIVE OF THE VFD MANUFACTURER TO TERMINATE THE WIRES AHEAD OF ALL MANUAL OR CONTROL SWITCHES OR BY-PASS CONTROLS. THE VFD SHALL ALSO SHUT OFF WHEN THE DISCONNECT SWITCH IS OPEN. 3/4" MINIMUM C. #14 MINIMUM CONTROL WIRE.
4. CONTRACTOR TO INSTALL FIRE ALARM SHUTDOWN WIRING. REMOVE JUMPER & WIRE ACROSS "EXTERNAL SAFETY DEVICE" CONTACTS. VERIFY THAT THE CONTACTS USED WILL SHUT THE FAN DOWN IN NORMAL AND BYPASS MODES. WIRES SHALL BE TERMINATED IN THE VFD BY THE MANUFACTURE REPRESENTATIVE.
5. VFD DRIVE MANUFACTURE REPRESENTATIVE WILL SET THE MOTOR OVERLOAD PROTECTION TO MATCH THE MOTOR. SUBMIT SETTING POINT WITH RECORD DRAWING MARKUPS.
6. POWER WIRING, SEE PARTIAL ONE LINE DIAGRAM.
7. INSTALL <N> RELAY IN PANEL 'F.A.I.P.' – SEE 3/M5.3.

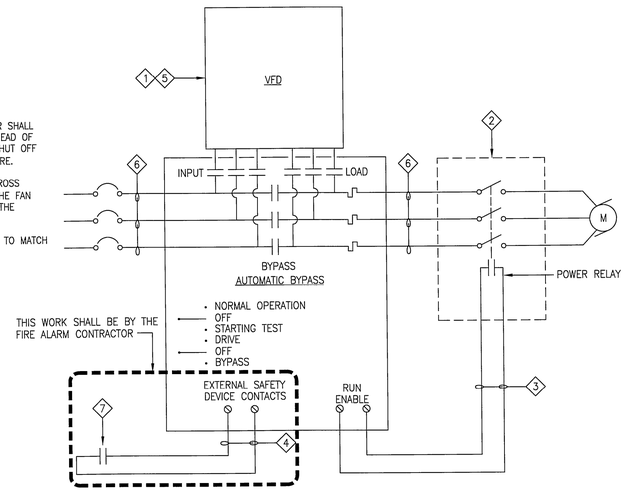

4 RETURN FAN VFD PARTIAL WIRING DIAGRAM

SCALE: N.T.S.

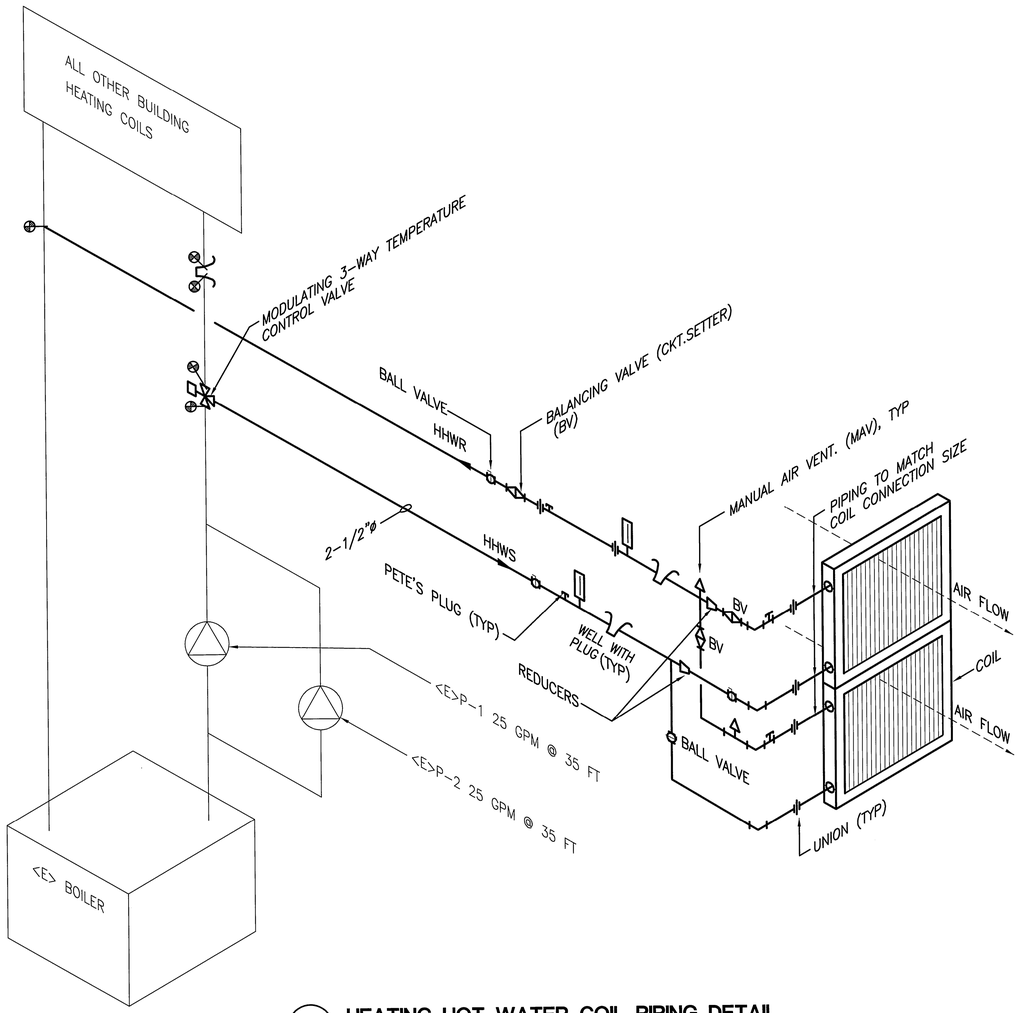

2 HEATING HOT WATER COIL PIPING DETAIL

SCALE: N.T.S.

GENERAL DETAIL NOTES:

A. WELDED BAR GRATING SHALL BE 3/16" x 1-1/4" BEARING BARS WITH BARS ON 1-1/4" CENTERS & CROSS BARS ON 4" CENTERS.

B. POSTS SHALL BE AT 18" O.C. EACH POST SHALL BE ANCHORED TO THE FLOOR WITH 1 3/8"ø HILTI TZ ANCHOR.

C. GRATING SHALL COVER DUCT IN FLOOR (NOT SHOWN FOR CLARITY). THIS BAR GRATING SHALL BE INSTALLED FLUSH WITH THE HOUSE KEEPING PAD (APPROXIMATELY 6" AFF).

D. GRATING PANELS SHALL NOT EXCEED 24" IN WIDTH (TO ALLOW EASY REMOVAL.

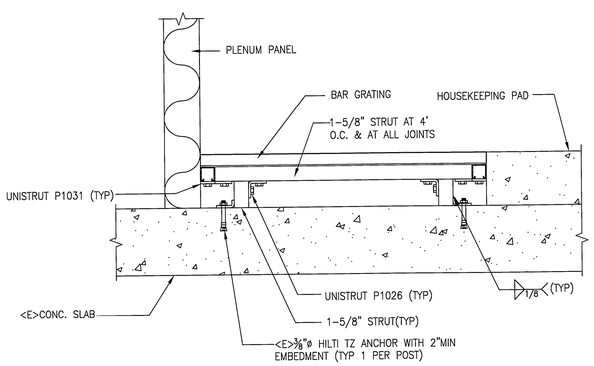

5 WALKWAY

SCALE: N.T.S.

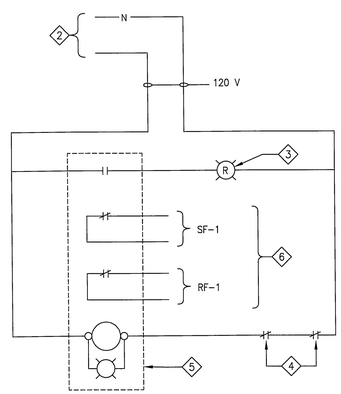

REFERENCE DETAIL NOTES:

1. THE CONTRACTOR SHALL PROVIDE & INSTALL 2 HIGH SPEED PLENUM SMOKE DETECTORS FOR INSTALLATION IN THE PLENUMS. IF EITHER OF THE SMOKE DETECTORS DETECTS SMOKE IT SHALL SHUT DOWN THE AIR HANDLER FANS IN THE EVENT SMOKE IS DETECTED. THE FIRE ALARM CONTRACTOR SHALL CONSTRUCT A "FIRE ALARM INTERFACE PANEL" TO ACCOMPLISH THESE FUNCTIONS. LABEL THE PANEL WITH 1/2" LETTERS. INSTALL THE PANEL IN A NEMA 3R ENCLOSURE ON THE SIDE OF THE AHU.
2. POWER THE INTERFACE PANEL FROM THE PNL 'PANEL'.
3. INSTALL A RED LIGHT IN THE PANEL DOOR. LABEL LIGHT "AHU-1 SHUTDOWN BY FIRE ALARM SYSTEM".
4. DRY RELAY CONTACTS AT HIGH SPEED SMOKE DETECTOR (TYP 2 DETECTORS).
5. NEW INTERFACE RELAY. ENERGIZE COIL TO SHUTDOWN FANS, & ACTIVATE LIGHT.
6. WIRE TO VFD'S TO SHUTDOWN FANS. SEE "VFD PARTIAL WIRING DIAGRAM" DETAILS 1/M-5.2 & 4/M-5.3.

3 AHU-1 FIRE ALARM INTERFACE PANEL 'FAIP'

SCALE: N.T.S.

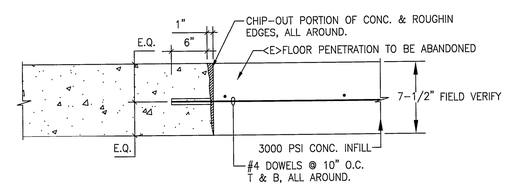

1 SLAB INFILL DETAIL

SCALE: N.T.S.

REGISTERED PROFESSIONAL ENGINEER — CARL A. ORTIZ — No. M35869 — MECHANICAL — STATE OF CALIFORNIA

CITY OF SAN LEANDRO — INCORPORATED 1872

BEFORE YOU DIG, CALL UNDERGROUND SERVICE ALERT 811

IT SHALL BE THE CONTRACTOR'S RESPONSIBILITY TO DETERMINE THE EXISTENCE AND LOCATION OF ALL UNDERGROUND UTILITIES. THOSE SHOWN REPRESENT THE BEST INFORMATION AVAILABLE TO THE CITY OF SAN LEANDRO AT THE TIME OF PREPARATION OF THESE PLANS. NO GUARANTEE IS MADE AS TO THE ACCURACY OF THIS INFORMATION.

NO.	DATE	REVISION

DESIGNED BY		DATE
DRAWN BY	TP	DATE 07/24/14
PROJECT MGR.	MJA	DATE 7/31/14
TRANS ADMIN.		DATE
SENIOR ENGR.		DATE 8/1/14
APPROVED BY:		DATE 8/4/14

CITY ENGINEER, R.C.E. No. 34870

CITY OF SAN LEANDRO

PUBLIC SAFETY HVAC EQUIPMENT REPLACEMENT

MECHANICAL DETAILS

M-5.3

AT FULL SIZE THIS LINE MEASURES 1"

SHEET 13 OF 23

JOB NO. 2013.0290

SCALE AS NOTED

DWG 3841 CASE 901

07/28/14 BID SET

K:\drawings\City of San Leandro\130340 Police Dept. AHU Replacement\130340M-5.3.DWG 7/31/2014 9:40 AM James Ajak

SCHEDULES

CHILLED WATER COIL

COIL CONSTRUCTION	
COIL ARRANGEMENT	TWO COILS STACKED VERTICALLY
CONNECTIONS	SEE DRAWINGS
TUBING TYPE	5/8 OD COPPER, .025" WALL
FIN TYPE	0.006 ALUMINUM, WAFFLE / RIPPLE (POLYCOAT COATED FINS)
HEADER CONSTRUCTION	2-1/2" COPPER
CASING CONSTRUCTION	STAINLESS
COIL AREA (EACH SECTION)	84" LONG X 42" HIGH
NUMBER OF ROWS	4
FINS PER INCH	9
HIGH POINT VENT CONNECTION	1/2" MINIMUM
LOW POINT DRAIN CONNECTION	1/2" MINIMUM
WEIGHT WITH WATER	970 LB TOTAL (485 LB EACH)
COIL MOUNTING DETAIL	1/M5.1
AIR SIDE DATA	
AIR FLOW	20,000 CFM TOTAL, (10,000 CFM EACH)
AVERAGE FACE VELOCITY	408 FT /MIN
AIR ENTERING CONDITIONS	84.0 DEG (DBT) 63.5 DEG (WBT)
TOTAL COOLING	610 MBTUH TOTAL (305 MBH EACH)
SENSIBLE COOLING	592 MBTUH TOTAL (296 MBH EACH)
AIR LEAVING CONDITIONS	56.8 DEG F (DBT) 53.0 DEG F (WBT)
AIR PRESSURE DROP	0.25 INCH WC
WATER SIDE DATA	
WATER FLOW	120 GPM TOTAL (60 EACH COIL)
WATER ENTERING TEMPERATURE	45 DEGREES F
WATER TEMPERATURE RISE	10.1 DEGREES F
WATER PRESSURE DROP	2.8 FT WC

TYPICAL MODEL NUMBER: BWL-42x84-4-9F-WR

FILTRATION SCHEDULE

APPLICATION	AHU-1
DESCRIPTION	UPSTREAM ACCESS FILTER RACK
MANUFACTURERS	CAMFIL-FARR, FLANDERS (OR EQUAL)
MODELS	HI-TRACK, K-TRACK
CONSTRUCTION	ALUMINUM EXTRUSION WITH FELT GASKETS
NOMINAL SIZE	8FT WIDE X 8FT HIGH
NUMBER OF CELLS	4 WIDE X 4 HIGH
PREFILTER TYPE	24 X 24 X 2" PLEATED MIRV 7
FINAL FILTER TYPE	MIRV 13 (85%) 24 X 24 X 12" RIGID
QUANTITY OF EACH FILTER	16 EACH
FINAL FILTER RATING	3" STATIC AT 625 FPM WITHOUT DAMAGE
MEDIA CONSTRUCTION	WATER RESISTANT
ACCEPTABLE MANUFACTURERS	VILEDON MV85, CAMFIL FARR DURAFIL 2V
DESIGN AIR FLOW	20,000 CFM
FACE VELOCITY	313 FT / MIN.
INITIAL PRESSURE DROP	0.35 INCH SP

BAG FILTERS SHALL NOT BE ACCEPTED
TAPE FILTER JOINTS TO ENSURE AN AIR TIGHT SEAL.

PLENUM DOOR SCHEDULE

DOOR #	MIN. SIZE (IN.)	LABEL
1	30 X 72	SUPPLY FANS
2	24 X 72	COOLING COIL
3	36 X 72	FILTERS & MIXED AIR PLENUM
4	18 X 72	RETURN FAN
2	24 X 72	RETURN PLENUM

1) LABEL DOORS WITH 1/2" ENGRAVED LABELS.
2) DOORS SHALL MEET REQUIREMENTS OF DETAIL 4/M5.1.
3) INCULDE FILTER MERV & COUNT FOR BOTH SETS OF FILTERS ON LABEL FOR ACCESS TO FILTER BANK.

SYSTEM PRESSURE REQUIRMENTS

SYSTEM	PRESSURE REQUIREMENT
CHILLED WATER PIPING	150 PSI, WELDED OR VICTAULIC
AIR HANDLER PLENUM	6 INCH WATER COLUMN
SUPPLY DUCTWORK	4 INCH WATER COLUMN
ALL OTHER DUCTWORK	2 INCH WATER COLUMN

901 EAST 14TH ST. SAN LEANDRO, SF ARRAY SCHEDULE

SUPPLY FAN ARRAY SCHEDULE

MARK	SF-1
MANUFACTURER	HUNTAIR FANWALL (OR EQUAL)
QUANTITY	ONE ARRAY OF 2x2 CELLS (4 FANS TOTAL)
FAN TYPE	AIR FOIL, CENTRIFUGAL, PLENUM FAN
WHEEL SIZE	22" 70% WHEEL
DESIGN CONDITION	20,000 CFM AT 4.00" SP (SYSTEM TOTAL)
BHP / RPM / HZ	4.4 HP / 1,877 RPM / 64.4 Hz (EACH FAN)
MOTOR HP / VOLTS / PHASE / RPM	5 HP / 208 V / 3 Ø / 1,750 (EACH FAN)
TOTAL FAN HP	17.7 HP (ALL FANS)
MOTOR POSITION	CENTER (DIRECT DRIVE)
MOTOR 60HZ RPM	1,750 RPM
WEIGHT	576 LBS / CELL TOTAL 2,302 LBS
MOUNTING DETAIL	4/M5.2

NOTES / ACCESSORIES:

1. MOTOR SHALL BE DESIGNED FOR INVERTER DUTY AND PREMIUM EFFICIENCY
2. MOTORS SHALL BE TEFC OR BETTER.
3. FANS SHALL HAVE TOTALLY ENCLOSED PROTECTIVE GAGES.
4. POWDER COAT FINISH.
5. ELECTROFIN COATING ON FAN WHEELS.
6. EACH FAN SHALL HAVE A FACTORY BACK DRAFT DAMPER.
7. COPLANER SILENCER.
8. FANS ARE SHIPPED AS INDIVIDUAL CELLS. MECHANICAL CONTRACTOR SHALL ASSEMBLE INTO COMPLETE ARRAYS.
9. THS FAN ARRAY SHALL FIT THROUGH A 36" DOOR.
10. SEE SPEC SECTION 233416.

AHU-1

RETURN FAN SCHEDULE

MARK	RF-1
MANUFACTURER	GREENHECK (OR EQUAL)
MODEL	40-QEP-3-I-50
FAN TYPE	AIRFOIL PLENUM
WHEEL SIZE	40"
DESIGN CONDITION	17,500 @ 0.75" SP
BHP / RPM (WITH DRIVE LOSSES)	3.43 HP / 534 RPM
OUTLET VELOCITY	1,418 FT/MIN
FAN REQUIREMENTS / INFORMATION	
MOTOR HP / VOLTS / PHASE	5 HP / 208V / 3P
ARRANGEMENT	3
CLASS	I
MOTOR POSITION	TOP
WEIGHT	937 LBS
MOUNTING DETAIL	SEE STRUCTURAL

NOTES / ACCESSORIES:

1. MOTOR TO BE LABELED INVERTER DUTY, PREMIUM EFFICIENCY.
2. CLASS F INSULATION.
3. SHAFT GROUNDING.
4. STRUCTURAL ISOLATION BASES BY ISOLATION VENDOR.
5. PROTECTIVE CAGING.
6. FAN BEARINGS TO BE L10- 200,000 HR.
7. 1.5 DRIVE SERVICE FACTOR.
8. WELDED CONSTRUCTION.
9. BELT GUARD.
10. EXTENDED LUBE LINES.
11. SEE SPEC SECTION 233416.

VFD SCHEDULE

MARK	HP	VOLTAGE / PHASE	VERTICAL BYPASS TYPE
<E>SF-1	25	208 / 3	HORIZONTAL CONFIGURATION, ELECTRONIC
RF-1	10	208 / 3	VERTICAL CONFIGURATION, ELECTRONIC

NOTES:

1. VFD SHALL HAVE PAD-LOCKABLE CIRCUIT BREAKER (DISCONNECT).
2. VFD SHALL HAVE INPUT AND OUTPUT LINE REACTORS AND RFI FILTERS.
3. VFD SHALL HAVE EPROM CHIP FOR DIRECT COMMUMICATION TO SIEMENS CONTROLS.
4. WARRANTY SHALL BE 2 YEARS.
5. FACTORY START-UP AND TRAINING SHALL BE INCLUDED.
6. VFD SHALL RESTART AUTOMATICALLY AFTER POWER OUTAGE.
7. VFD'S SHALL HAVE AN ADUSTABLE FAIL-SAFE MODE. IN THE EVENT OF A COMMUNICATIONS FAILURE THE VFD SHALL MAINTAIN THE LAST SPEED THAT THE DRIVE WAS SET TO.
8. ONLY ABB OR EATON WILL BE ACCEPTED.
9. THE <E> DRIVE IS A DANFOS.
10. SEE SPEC SECTION 262923.

HEATING HOT WATER COIL

COIL CONSTRUCTION	
COIL ARRANGEMENT	TWO COILS STACKED VERTICALLY
CONNECTIONS	SEE DRAWINGS
TUBING TYPE	5/8" OD COPPER, .025" WALL
FIN TYPE	0.006 ALUMINUM, WAFFLE / RIPPLE
HEADER CONSTRUCTION	1-1/2" COPPER
CASING CONSTRUCTION	GALVANIZED
COIL AREA (EACH SECTION)	84" LONG X 42" HIGH
NUMBER OF ROWS	1
FINS PER INCH	8
HIGH POINT VENT CONNECTION	1/2" MINIMUM
LOW POINT DRAIN CONNECTION	1/2" MINIMUM
WEIGHT WITH WATER	258 LB TOTAL (129 LB EACH)
COIL MOUNTING DETAIL	1/M5.1
AIR SIDE DATA	
AIR FLOW	20,000 CFM TOTAL, (10,000 CFM EACH)
AVERAGE FACE VELOCITY	408 FT /MIN
AIR ENTERING CONDITIONS	60 DEG (DBT)
TOTAL HEATING	544 MBTUH TOTAL (272 MBH EACH)
AIR LEAVING CONDITIONS	85.2 DEG F (DBT)
AIR PRESSURE DROP	0.06 INCH WC
WATER SIDE DATA	
WATER FLOW	30 GPM TOTAL (15 EACH COIL)
WATER ENTERING TEMPERATURE	170 DEGREES F
WATER TEMPERATURE DROP	36.7 DEGREES F
WATER PRESSURE DROP	2.4 FT WC

COIL FOR MORNING WARM UP.

TYPICAL MODEL NUMBER: BWL-42x84-1-8F-WR

MIXED AIR DAMPER SCHEDULE

APPLICATION	QUANTITY	NOMINAL SIZE	RUSKIN MODEL #	NOTES
OUTSIDE AIR	1	96 W x 30 H	CD-30AF-2	1, 2, 3, 4
RETURN AIR	1	30 W x 96 H	CD-30AF-2	1, 2, 3
EXHAUST AIR	1	20 W x 27 H	CD-30AF-2	1, 2, 3
EXHAUST AIR	1	27 W x 38 H	CD-30AF-2	1, 2, 3

NOTES:

1. ALSO SEE SPECIFICATION SECTION 233300 / 2.13 FOR ADDITIONAL REQUIREMENTS.
2. CONTRACTOR SHALL VERIFY ALL SIZES PRIOR TO RELEASING ORDER.
3. THIS DAMPER SHALL BE MADE OF 3 SECTIONS EACH 32x30 3 ACTUATORS.

EXHAUST FAN SCHEDULE

MARK	E-4
APPLICATION	MIXED FLOW
TYPE	DIRECT DRIVE
MANUFACTURER	GREENHECK (OR EQUAL)
MODEL	QEID-18-65-A20
DESIGN CFM	5,000 CFM
STATIC PRESSURE	0.75"
FAN RPM	1,770
MOTOR HP	2 HP
BHP	1.76
MOTOR TYPE	TEFC
WEIGHT	262 LBS
ELECTRICAL	
VOLTAGE / PHASE	208 V / 3-PHASE

OPTIONS:
1) GALVANIZED BIRD SCREEN.
2) CLASS F INSULATION.
3) CONTRACTOR TO PROVIDE TEMPORARY INLET SCREEN & FILTER MATERIAL.

EQUIPMENT LISTED ON SHEET M6.1 IS THE BASIS OF DESIGN FOR THE TITLE 24 CALCULATIONS. SUBSTITUTIONS WITH 'OR EQUAL' EQUIPMENT IS ACCEPTABLE. SEE SPECIFICATIONS FOR ADDITIONAL INFORMATION.

M-6.1

REGISTERED PROFESSIONAL ENGINEER CARL A. CRITZER No. M35859 MECHANICAL STATE OF CALIFORNIA

CITY OF SAN LEANDRO INCORPORATED 1872

BEFORE YOU DIG, CALL UNDERGROUND SERVICE ALERT 811

IT SHALL BE THE CONTRACTOR'S RESPONSIBILITY TO DETERMINE THE EXISTENCE AND LOCATION OF ALL UNDERGROUND UTILITIES. THOSE SHOWN REPRESENT THE BEST INFORMATION AVAILABLE TO THE CITY OF SAN LEANDRO AT THE TIME OF PREPARATION OF THESE PLANS. NO GUARANTEE IS MADE AS TO THE ACCURACY OF THIS INFORMATION.

NO.	DATE	REVISION

CITY OF SAN LEANDRO

DESIGNED BY _____ DATE _____
DRAWN BY TP DATE 07/24/14
PROJECT MGR. MJG DATE 7/31/14
TRANS ADMIN. — DATE —
SENIOR ENGR. M.J. DATE 8/1/14
APPROVED BY: DATE 8/4/14
CITY ENGINEER, R.C.E. No. 34870

PUBLIC SAFETY
HVAC EQUIPMENT REPLACEMENT
MECHANICAL SCHEDULES

AT FULL SIZE THIS LINE MEASURES 1"

SHEET 14 OF 23
JOB NO. 2013.0290
SCALE AS NOTED
DWG 3842 CASE 901

07/28/14 BID SET

K:\drawings\City of San Leandro\130340 Police Dept. AHU Replacement\130340M-6.1.DWG 7/31/2014 9:39 AM James Ajok

ELECTRICAL GENERAL NOTES

1. ALL TEMPORARY CONNECTIONS SHALL BE CONSIDERED PART OF THIS CONTRACT AND NO EXTRA CHARGES WILL BE ALLOWED. THIS SHALL INCLUDE MINOR ITEMS OF MATERIAL OR EQUIPMENT NECESSARY TO MEET THE REQUIREMENTS AND INTENT OF THE PROJECT.

2. THE CONTRACTOR SHALL BE RESPONSIBLE FOR THE SAFETY OF PERSONS AND PROPERTY AND SHALL PROVIDE INSURANCE COVERAGE AS NECESSARY FOR LIABILITY, PERSONAL, AND PROPERTY DAMAGE, TO FULLY PROTECT THE OWNER, ARCHITECT, AND ENGINEER FROM ANY AND ALL CLAIMS RESULTING FROM THIS WORK.

3. THESE DRAWINGS DO NOT REPRESENT THE EXACT LOCATIONS, SIZES OR EXTENT OF UTILITIES ON SITE. CONTRACTOR SHALL TAKE STANDARD PRECAUTIONS FOR WORK IN EXISTING FACILITIES.

4. EXISTING ELECTRICAL WIRING WHICH WILL NOT BE MADE OBSOLETE AND WHICH WILL BE DISTURBED DUE TO CONSTRUCTION CHANGES REQUIRED BY THIS CONTRACT SHALL BE RESTORED TO OPERATING CONDITION, AS REQUIRED AND/OR DIRECTED. WHERE REQUIRED, SHOWN AND/OR DIRECTED, OUTLETS AND CONDUIT RUNS SHALL BE RELOCATED. IN SOME CASES IT MAY BE NECESSARY TO EXTEND CONDUITS AND PULL IN NEW WIRING OR INSTALL JUNCTION BOXES AND SPLICE IN NEW WIRING OR REPLACE OLD WIRING WITH NEW.

5. CERTAIN REMODELING OF ELECTRICAL FACILITIES WILL BE REQUIRED IN THE EXISTING BUILDING. EXISTING CONDUIT RUNS ARE GENERALLY NOT SHOWN, ALTHOUGH A FULL ATTEMPT HAS BEEN MADE TO SHOW SOME EXISTING CONDITIONS, OF WHICH INFORMATION HAS BEEN TAKEN FROM EXISTING RECORD DRAWINGS AND/OR LIMITED FIELD INVESTIGATIONS. THE DRAWINGS SHOWING LOCATION OF EXISTING EQUIPMENT, OUTLETS, FIXTURES, ETC., ARE APPROXIMATE ONLY (CONTRACTOR TO FIELD VERIFY).

6. ALL ELECTRICAL MATERIALS AND EQUIPMENT SHALL BE NEW AND SHALL BE LISTED AND LABELED BY A NATIONALLY RECOGNIZED TESTING LABORATORY AND SHALL BE INSTALLED AS PER LISTING OR LABELING (IE. MAXIMUM FUSE SIZE MEANS FUSE PROTECTION IS REQUIRED).

7. ALL ELECTRICAL EQUIPMENT AND INSTALLATION SHALL COMPLY WITH THE FOLLOWING REQUIREMENTS:
   a. AMERICAN STANDARD ASSOCIATION (ASA)
   b. AMERICAN NATIONAL STANDARD INSTITUTE (ANSI)
   c. AMERICAN SOCIETY OF TESTING MATERIALS (ASYM)
   d. CALIFORNIA CODE OF REGULATIONS TITLE 24 (CCR)
   e. INSTITUTE OF ELECTRICAL AND ELECTRONIC ENGINEERS (IEEE)
   f. INSULATED POWER CABLE ENGINEERS ASSOCIATIONS (IPCEA)
   g. NATIONAL ELECTRICAL MANUFACTURERS ASSOCIATIONS (NEMA)
   h. NATIONAL FIRE PROTECTION AGENCY (NFPA)
   i. ALL LOCAL CODE HAVING JURISDICTION

11. CONTRACTOR IS RESPONSIBLE FOR COORDINATING ALL CROSSINGS ON NEW UTILITIES WITH THAT OF EXISTING ON SITE AND IN ADJACENT PROPERTIES. NOTIFY THE ENGINEER IMMEDIATELY OF ANY DEVIATIONS OR DISCREPANCIES FROM THIS PLAN.

12. CONTRACTOR SHALL COORDINATE HIS/HER WORK WITH OTHER TRADE ON SITE. ANY COST TO PERFORM WORK TO ACCOMPLISH SAID COORDINATION WHICH DIFFERS FROM THE WORK AS SHOWN ON THE DRAWINGS SHALL BE INCURRED BY THE CONTRACTOR. ANY DISCREPANCIES, AMBIGUITIES OR CONFLICTS SHALL BE BROUGHT TO THE ATTENTION OF THE ARCHITECT DURING BID TIME FOR CLARIFICATIONS. ANY SUCH CONFLICTS NOT CLARIFIED PRIOR TO BID SHALL BE SUBJECT TO THE INTERPRETATION OF THE ARCHITECT/ENGINEER AT NO ADDITIONAL COST TO THE OWNER.

13. COORDINATE WITH OTHER TRADES AS TO THE EXACT LOCATION OF THEIR RESPECTIVE EQUIPMENT. PROVIDE POWER AND CONNECTION TO MOTORS AND EQUIPMENT REQUIRING ELECTRICAL CONNECTIONS AS INDICATED ON ELECTRICAL DRAWINGS AND DRAWINGS OF OTHER TRADES. CONTRACTOR SHALL REVIEW DRAWINGS OF OTHER TRADES FOR CONTROL DIAGRAMS, SIZE AND LOCATION OF EQUIPMENT. DISCONNECT SWITCHES, STARTERS, AND CONDUITS FOR CONTROL WIRING FOR MECHANICAL AND PLUMBING EQUIPMENT SHALL BE PROVIDED BY ELECTRICAL CONTRACTOR. CONTRACTOR SHALL BE RESPONSIBLE FOR OBTAINING MANUFACTURER'S SHOP DRAWINGS PRIOR TO ROUGHING IN ALL CONDUITS TO THIS EQUIPMENT.

14. BEFORE ROUGH-IN, VERIFY ALL MOUNTING HEIGHTS AND EXACT LOCATIONS FOR ALL EQUIPMENT, ELECTRICAL CONNECTIONS, STUB-UPS, RECEPTACLES, OUTLETS, CONDUIT RUNS, ETC. WITH ARCHITECT AND OWNER. PLACE DEVICES LOCATED ABOVE COUNTERS, SHELVING, ETC. AND IN BATHROOMS SO AS NOT TO CONFLICT WITH EDGES OF WAINSCOTING, COUNTER SPLASH, SHELVING, ETC. ARCHITECTURAL DRAWINGS SHALL GOVERN. REFER TO ARCHITECTURAL ELEVATIONS FOR EXACT LOCATIONS OF ELECTRICAL DEVICES

15. MOUNTING HEIGHTS OF ALL CONTROL DEVICES TO BE USED BY OCCUPANT OF THE ROOM OR AREA SHALL BE MOUNTED AT THE FOLLOWING HEIGHTS:
    RECEPTACLES OUTLETS : +18" (TO BOTTOM OF OUTLETS)
    TELEPHONE/TV/DATA OUTLETS : +18" (TO BOTTOM OF OUTLETS)
    LIGHT SWITCHES : +44" (TO HIGHEST OPERABLE PART)
    OUTLETS ABOVE COUNTER : +12" ABOVE COUNTER (TO BOTTOM OF OUTLETS)
    MOUNTING HEIGHTS OF ALL DEVICES AND EQUIPMENT ARE FROM FINISHED FLOOR TO LOCATION OF DEVICE AS NOTED. EQUIPMENT INSTALLED IN LOCATIONS NOT APPROVED BY THE ARCHITECT SHALL BE RELOCATED AS DIRECTED BY THE ARCHITECT AT NO ADDITIONAL COST TO THE OWNER.

16. COORDINATE ALL OUTLET BOX INSTALLATION WITH ARCHITECTURAL WALL FINISH SCHEDULES. SPACE BETWEEN FACEPLATE AND DEVICE BOX SHALL NOT EXCEED 1/8".

17. FOR RENOVATION WORK, THE CONTRACTOR SHALL CONCEAL ALL WORK WHERE POSSIBLE. ALL EXPOSED RACEWAY AND BOXES IN OCCUPIED AREAS OR ON EXTERIOR WALLS SHALL BE PAINTED TO MATCH ADJACENT FINISHES.

18. THE CONTRACTOR SHALL BE HELD FULLY RESPONSIBLE FOR THE PROPER RESTORATION OF ALL EXISTING SURFACES REQUIRING PATCHING, PLASTERING, PAINTING AND/OR OTHER REPAIR DUE TO THE INSTALLATION OF ELECTRICAL WORK UNDER THE TERMS OF THIS SPECIFICATION. CLOSE ALL OPENINGS, REPAIR ALL SURFACES, ETC., AS REQUIRED.

19. SEAL ALL CONDUIT PENETRATIONS THROUGH FIRE RATED WALLS AND CEILINGS. FURNISH AND INSTALL FIRE RATED BACKBOXES AS REQUIRED, MAINTAINING FIRE RATING OF CEILING OR WALLS WHERE RECESSED ELECTRIC EQUIPMENT SUCH AS LIGHT FIXTURES, SWITCHES, RECEPTACLES, PANEL, ETC. ARE INSTALLED IN RATED WALL OR CEILINGS. PENETRATIONS OF FIRE RATED WALLS, CEILINGS, OR FLOORS SHALL COMPLY WITH UBC CHAPTER 7 REQUIREMENTS. CONDUIT PENETRATIONS THAT ARE NOT STUBBED-OUT INSIDE THE WALL SHALL MEET F AND T RATING. ALL FIRE PROOFING METHOD SHALL BE UL APPROVED.

20. ALL EXTERIOR EQUIPMENT SHALL BE NEMA 3R RATED. ALL WALL PENETRATIONS TO EXTERIOR WALLS SHALL BE SEALED WATER TIGHT.

21. PULLING TAPES: ALL RACEWAY WITHOUT CABLE OR WIRE SHALL BE INSTALLED WITH A MINIMUM 1100 LBS. STRENGTH TEST POLYESTER PULLING TAPE. PULLING TAPES SHALL BE DETECTABLE MULE-TAPE WITH SEQUENTIAL FOOTAGE MARKING.

22. RUN NO MORE THAN 3 CURRENT CARRYING CONDUCTORS IN ANY WIREWAY UNLESS DE-RATING IS APPROVED BY ENGINEER OR SHOWN ON DRAWINGS.

23. ALL BRANCH CIRCUIT CONDUCTORS SHALL BE COPPER, #12 AWG MINIMUM, RATED FOR 600V, THHN/THWN, 75 DEGREE CELSIUS. CONDUCTORS #12 AWG AND SMALLER SHALL BE SOLID. CONDUCTOR #10 AWG AND LARGER SHALL BE STRANDED. SYSTEM VOLTAGE SHALL BE IDENTIFIED AS TO VOLTAGE AND PHASE CONNECTIONS BY MEANS OF COLOR IMPREGNATED INSULATION OR APPROVED COLORED MARKING TAPE.

24. WHERE MULTI-HOMERUNS ARE INDICATED ON DRAWINGS INDICATING THE SAME CIRCUIT NUMBER, PROVIDE A JUNCTION BOX ABOVE THE ACCESSIBLE CEILING AND ROUTE ONE SET OF WIRES TO THE CIRCUIT BREAKER.

25. REFER TO THE SINGLE LINE DIAGRAM FOR THE CONDUIT AND CONDUCTOR SIZES HOMERUN TO ELECTRICAL PANELS. CONDUIT RUNS MAY NOT BE SHOWN ON DRAWINGS, BUT ARE PART OF THIS CONTRACT.

26. ALL CONDUIT RUNS INCLUDING STRAIGHT FEEDER AND BRANCH CIRCUIT SHALL BE PROVIDED WITH SUFFICIENT PULL BOXES OR JUNCTION BOXES TO LIMIT THE MAXIMUM LENGTH OF ANY SINGLE CABLE PULL TO 100 FEET. PULL BOXES SHALL BE SIZED PER CODE OR AS INDICATED ON DRAWINGS. LOCATIONS SHALL BE DETERMINED IN THE FIELD OR AS INDICATED ON THE DRAWINGS.

27. FINAL CONNECTIONS TO ALL EQUIPMENT SHALL BE PER MANUFACTURER'S APPROVED WIRING DIAGRAMS, DETAILS, AND INSTRUCTIONS. IT SHALL BE THE CONTRACTOR'S RESPONSIBILITY TO PROVIDE MATERIAL AND EQUIPMENT COMPATIBLE WITH EQUIPMENT ACTUALLY SUPPLIED.

28. DO NOT COMBINE DIFFERENT SYSTEM VOLTAGES IN SAME CONDUIT (EG., 120/208V VS. 277/480V), UNLESS IS APPROVED BY ENGINEER OR SHOWN ON DRAWINGS.

29. ELECTRICAL SYSTEMS SHALL BE INSTALLED FOR FINAL INSPECTIONS. PROVIDE NEUTRAL TEST AND PROOF OF TORQUE DURING FINAL INSPECTION FOR ALL UNITS. FINAL TERMINATIONS OF CONDUCTORS TO ELECTRICAL EQUIPMENT AND DEVICES SHALL BE TORQUE WRENCH TIGHTENED TO THE MANUFACTURER'S RECOMMENDED SPECIFICATION, NO EXCEPTION.

30. CIRCUIT BREAKER TERMINALS IN SWITCHBOARDS AND LOAD CENTER SHALL BE UL LISTED AND APPROVED FOR USE COPPER 75 DEGREE CELSIUS CONDUCTORS.

31. SIZES OF BREAKERS, SWITCHES, FUSES AND FEEDERS ARE BASED ON DESIGNED EQUIPMENT SIZES. THESE SIZES SHALL BE ADJUSTED TO SATISFY REQUIREMENTS OF ACTUAL INSTALLED OR SUBSTITUTE EQUIPMENT. UP SIZING OR DOWNSIZING OF FEEDERS SHALL BE PROVIDED WITHOUT ADDITIONAL COST TO THE OWNER.

32. AS REQUIRED ALL OVERSIZED FEEDERS THAT WERE ADJUSTED IN SIZE TO COMPENSATE FOR VOLTAGE DROP SHALL BE PROVIDED WITH ADAPTER LUGS OR SPLICE BOX. ADAPTER LUGS SHALL BE PROVIDED IF SIZE IS AVAILABLE. OTHERWISE PROVIDE CABLE SPLICES IN THE SPLICE BOX TO REDUCE CABLES TO THE MAXIMUM SIZE THAT THE BREAKER LUGS CAN ACCOMMODATE.

33. CONTRACTOR SHALL BE RESPONSIBLE FOR ALL SAW-CUTTING, TRENCHING, BACKFILLING, COMPACTION AND PATCHING OF CONCRETE AND ASPHALT AS REQUIRED TO COMPLETE WORK. USE EXTREME CAUTION WHEN TRENCHING NEAR EXISTING UNDERGROUND UTILITY LINE. CONTRACTOR SHALL PROVIDE ALL REQUIRED CUTTING, PATCHING, PAINTING, AND REPAIRS NECESSARY TO RESTORE DAMAGED SURFACES TO EQUAL OR BETTER THAN ORIGINAL CONDITIONS EXISTING AT THE START OF WORK.

34. ALL ELECTRICAL EQUIPMENT SHALL BE BRACED OR ANCHORED TO RESIST HORIZONTAL FORCE ACTING IN ANY DIRECTION IN ACCORDANCE WITH THE REQUIREMENTS OF THE LATEST EDITION OF ASCE 1-05 13.2.

35. RIGID GALVANIZED STEEL CONDUIT SHALL BE USED FOR ALL EXTERIOR APPLICATIONS, ALL CONDUITS LARGER THAN 2" TRADE DIAMETER, AND ALL INDOOR CONDUITS BELOW EIGHT (8) FEET FROM FINISHED FLOOR.

36. ELECTRICAL METALLIC TUBING (EMT) IS ONLY ALLOWED IN INTERIOR LOCATION ABOVE EIGHT (8) FEET FROM FINISHED FLOOR AND WHEN ENTERING A PANEL FROM ABOVE.

37. CONNECTIONS TO VIBRATING EQUIPMENT (MOTOR, TRANSFORMER ENCLOSURE, ETC.) AND SEISMIC SEPARATIONS SHALL BE PROVIDED WITH LIQUID-TIGHT FLEXIBLE STEEL CONDUIT WITH WATERTIGHT CONNECTORS. MAXIMUM LENGTH OF CONDUIT SHALL BE SIX FEET, UNLESS OTHERWISE NOTED.

38. CONTRACTOR SHALL PROVIDE AND INSTALL ACCESS PANELS IN NON-ACCESSIBLE CEILINGS WHERE REQUIRED TO ACCESS ELECTRICAL EQUIPMENT IN CEILING SPACE. ACCESS DOORS SHALL HAVE FIRE RATING EQUAL TO THE CEILING ASSEMBLY IN WHICH THEY ARE INSTALLED.

39. ALL FIRE LIFE SAFETY EQUIPMENT, SUCH AS FIRE ALARM CONTROL PANEL AND REMOTE POWER SUPPLIES SHALL BE PROVIDED WITH DEDICATED CIRCUITS. IDENTIFY CIRCUIT DESIGNATION AND PROVIDE PERMANENT LABELING, "FIRE ALARM CIRCUIT" ON ELECTRICAL PANEL. PROVIDE LOCKABLE CIRCUIT BREAKER.

40. ROUTE CONDUIT PARALLEL AND PERPENDICULAR TO WALLS AND ADJACENT PIPING. ARRANGE CONDUIT TO MAINTAIN HEADROOM AND TO PRESENT A NEAT APPEARANCE.

41. WHEN A DISCREPANCY IN QUANTITY OR SIZE OF CONDUIT, WIRE, EQUIPMENT, CIRCUIT BREAKERS, ETC., ARISES ON THE DRAWINGS OR SPECIFICATIONS, CONTRACTOR SHALL BE RESPONSIBLE FOR PROVIDING AND INSTALLING ALL MATERIAL REQUIRED BY THE MOST STRINGENT CONDITIONS NOTED ON THE DRAWINGS OR IN THE SPECIFICATIONS TO PROVIDE A COMPLETE AND OPERABLE SYSTEM, OR AS DIRECTED BY ENGINEER.

42. FOR SMALL AC MOTORS NOT HAVING BUILT-IN THERMAL OVERLOAD PROTECTION, PROVIDE MANUAL MOTOR STARTERS WITH OVERLOAD HEATER ELEMENTS SIZED PER MANUFACTURER'S RECOMMENDATION. FOR SMALL AC MOTORS WITH BUILT-IN THERMAL OVERLOAD PROTECTION, PROVIDE A HORSEPOWER RATED TOGGLE DISCONNECT SWITCH.

43. DISCONNECT SAFETY SWITCHES SHALL BE HEAVY DUTY AND BE RATED FOR THE NUMBER OF POLES, VOLTAGE, CURRENT AND HORSEPOWER RATING AS REQUIRED. PROVIDE FUSE PROTECTION BASED ON THE MOTOR NAMEPLATE RATINGS.

44. PROVIDE PERMANENT IDENTIFICATIONS (NAMEPLATES) FOR ALL ELECTRICAL PANELS, SWITCHBOARDS, MOTOR CONTROL CENTERS, DISCONNECT SWITCHES, TRANSFORMERS, TERMINAL CABINETS, ETC.

45. ELECTRICAL CONTRACTOR IS RESPONSIBLE TO VERIFY TYPE OF CEILING SYSTEMS AND TO FURNISH APPROVED LIGHTING FIXTURES OF THE TYPE REQUIRED FOR MOUNTING IN SUBJECT CEILING. PROVIDE ALL NECESSARY MOUNTING KIT/HARDWARE TO PROVIDE A COMPLETE WORKING LIGHTING SYSTEM.

46. ALL FINAL ELECTRICAL CONNECTIONS TO OWNER FURNISHED EQUIPMENT SHALL BE MADE BY THE ELECTRICAL CONTRACTOR.

47. ALL SPLICES AND TERMINALS SHALL BE COMPRESSION TYPE, OF SEAMLESS PURE COPPER, TIN PLATED, LONG BARREL, INSPECTION WINDOW, TERMINALS WITH TWO-HOLE PAD (WITH NEMA DRILLING). CLEAN ALL SURFACES AND INSTALL WITH OXIDE INHIBITING COMPOUND BURNDY PENETROX-E OR EQUAL. APPLY COMPOUND BETWEEN BUS BAR AND LUG PAD AND BETWEEN CONDUCTOR AND LUG BARREL. INSTALL COMPRESSION CONNECTORS WITH A FULLY CIRCUMFERENTIAL COMPRESSION DIE BURNDY HYPRESS OR EQUAL.

48. LABEL ALL CONDUIT WHERE IT BEGINS, AND WHERE IT TERMINATES INTO A BOX, PANEL, DEVICE, LOAD, OR DISCONNECT. CONDUIT SHALL BE LABELED EVERY 30 FEET OR LESS. CONDUIT SHALL BE LABELED WHERE IT PENETRATES ANY WALL OR FLOOR. LABEL SHALL BE PERMANENT PRINTED LABELS (DESCRIBING SOURCE, CIRCUIT, AND LOAD) LEGIBLE FROM FLOOR WHERE POSSIBLE (STANDING POSITION).

49. CONTRACTOR'S FAILURE TO ORDER OR RELEASE ORDER FOR MATERIALS AND/OR EQUIPMENT WILL NOT BE ACCEPTED AS A REASON TO SUBSTITUTE ALTERNATE MATERIALS, EQUIPMENT OR INSTALLATION METHODS.

ELECTRICAL ABBREVIATIONS

A	AMPS	MIN	MINIMUM
AC	ALTERNATING CURRENT	MSB	MAIN SWITCHBOARD
AF	AMP FRAME	**<N>**	**NEW (BOLD)**
AFF	ABOVE FINISH FLOOR	NIC	NOT IN CONTRACT
AT	AMP TRIP	NTS	NOT TO SCALE
AWG	AMERICAN WIRE GAUGE	P	POWER
BC	BARE COPPER	PB	PULLBOX
C	CONDUIT	PNL	PANEL
CLG	CEILING	PPB	POWER PULLBOX
CKT	CIRCUIT	PWR	POWER
C.O.	CONDUIT ONLY	<R>	REMOVE
DSW	FUSED DISCONNECT SWITCH	<RRN>	REMOVE AND REPLACE WITH NEW
<E>	EXISTING	RPS	REMOTE POWER SUPPLY
ELEC	ELECTRICAL	RR	RESTROOM
EM	EMERGENCY	REC	RECEPTACLE
EMH	ELECTRICAL MAN-HOLE	S	SIGNAL
<F>	FUTURE	SEC	SECURITY
FA	FIRE ALARM	SED	SEE ELECTRICAL DRAWINGS
FACP	FIRE ALARM CONTROL PANEL	SLD	SINGLE LINE DIAGRAM
FATC	FIRE ALARM TERMINAL CABINET	SPB	SIGNAL PULLBOX
FF	FINISH FLOOR	SWBD	SWITCHBOARD
FT	FEET	T	TRIP
G	GROUNDING CONDUCTOR	TYP	TYPICAL
GFI	GROUND FAULT INTERRUPTER	UG	UNDERGROUND
GND	GROUND	UON	UNLESS OTHERWISE NOTED
INT	INTERIOR	V	VOLTS
KVA	KILOVOLT AMPS	W	WIRE, WATTS
LCP	LIGHTING CONTROL PANEL	W/	WITH
LSIG	LONG SHORT INSTANTANEOUS GROUND	WAP	WIRELESS ACCESS POINT
LTG	LIGHTING	WP	WEATHERPROOF
LTS	LIGHTS	XFMR	TRANSFORMER

ELECTRICAL SYMBOLS

	DATA OUTLET, FLUSH MOUNT IN WALL	VFD	VARIABLE FREQUENCY DRIVE
	TELEPHONE OUTLET, FLUSH MOUNT IN WALL	#, #	REFERENCE SHEET NOTE
$a	SINGLE POLE, SINGLE THROW SWITCH. LOWER CASE LETTER INDICATES CIRCUIT, LAMPS OR FAN CONTROLLED BY SWITCH	1 / E5-1	DETAIL TAG. REFER TO DETAIL 1 ON SHEET E.5-1
	DUPLEX RECEPTACLE 20A, 125V, 3WG, NEMA 5-20R		ELECTRICAL PANEL
GFI	DUPLEX GFI RECEPTACLE, ABOVE COUNTER SPLASH		DISCONNECT SWITCH – NON FUSED
	BRANCH CIRCUIT WIRING IN CONDUIT EXPOSED ON ROOF OR BUILDING EXTERIOR		DISCONNECT SWITCH – HEAVY DUTY FUSED
	BRANCH CIRCUIT WIRING IN CONDUIT CONCEALED UNDER FLOOR OR UNDERGROUND	PD	TESCO PEDESTAL
	BRANCH CIRCUIT HOME RUN TO PANEL. CONCEALED IN CEILING SPACE OR WHERE POSSIBLE		WALL MOUNTED LIGHT FIXTURE
	CIRCUIT BREAKER		WALL MOUNTED LIGHT FIXTURE
	BRANCH CIRCUIT HOMERUN TO PANEL		SURFACE MOUNTED LIGHT FIXTURE
			EXISTING DEVICE, CONDUIT, WIRE, ETC. TO BE DEMOLISHED OR RELOCATED
			EXISTING DEVICE, CONDUIT, WIRE, ETC. TO REMAIN
			NEW DEVICE, CONDUIT, WIRE, ETC. (BOLD)

APPLICABLE CODES

UNLESS OTHERWISE INDICATED OR SPECIFIED, PERFORM THE WORK IN CONFORMANCE WITH THE LATEST EDITIONS OF ALL APPLICABLE REGULATORY REQUIREMENTS, INCLUDING, BUT NOT LIMITED TO, THE FOLLOWING:

1. CALIFORNIA BUILDING STANDARDS ADMINISTRATIVE CODE (PART 1, TITLE 24): 2013 (2010 CHAPTER 10 IN EFFECT UNTIL JULY 1, 2014)
2. CALIFORNIA BUILDING CODE (PART 2, TITLE 24): 2012 IBC WITH 2013 CA AMENDMENTS
3. CALIFORNIA ELECTRICAL CODE (PART 3, TITLE 24): 2012 NEC WITH 2013 CA AMENDMENTS
4. CALIFORNIA MECHANICAL CODE (PART 4, TITLE 24): 2012 UMC WITH 2013 CA AMENDMENTS
5. CALIFORNIA PLUMBING CODE (PART 5, TITLE 24) 2012 UPC WITH 2013 CA AMENDMENTS
6. CALIFORNIA ENERGY CODE (PART 6, TITLE 24): 2013 (2010 IN EFFECT UNTIL JULY 1, 2014)
7. CALIFORNIA HISTORICAL BUILDING CODE, (PART 8, TITLE 24): 2013
8. CALIFORNIA FIRE CODE (PART 9, TITLE 24): 2012 IFC WITH 2013 CA AMENDMENTS
9. CALIFORNIA EXISTING BUILDING CODE (PART 10, TITLE 24): 2012 (INTERNATIONAL EXISTING BUILDING CODE WITH 2013 CA AMENDMENTS)
10. CALIFORNIA GREEN BUILDING STANDARDS CODE OR CAL GREEN (PART 11, TITLE 24): 2013 (AFFECTED 2010 ENERGY PROVISIONS ONLY IN EFFECT UNTIL JULY 1, 2014)
11. CALIFORNIA REFERENCED STANDARDS CODE (PART 12, TITLE 24): 2013
12. CALIFORNIA CODE OF REGULATIONS PUBLIC SAFETY (TITLE 19), STATE FIRE MARSHAL: 2013
13. 2013 NFPA 13 INSTALLATION OF SPRINKLER SYSTEMS
14. 2013 NFPA 14 INSTALLATION OF STANDPIPE, PRIVATE HYDRANT AND HOSE SYSTEMS
15. 2013 NFPA 17 DRY CHEMICAL EXTINGUISHING SYSTEM
16. 2013 NFPA 17A TO A UL 300 FOR CLASS I HOOD FIRE SUPPRESSION SYSTEM. (WET CHEMICAL EXTINGUISHING SYSTEMS)
17. 2013 NFPA 20 INSTALLATION OF STATIONARY PUMPS FOR FIRE PROTECTION
18. 2013 NFPA 22 WATER TANKS FOR PRIVATE FIRE PROTECTION
19. 2013 NFPA 24 INSTALLATION OF PRIVATE FIRE SERVICE MAINS AND THEIR APPURTENANCES
20. 2008 NFPA 25 NSPECTION, TESTING, MAINTENANCE OF WATER-BASED FIRE PROTECTION SYSTEMS
21. 2013 NFPA 72 NATIONAL FIRE ALARM CODE, WITH CA AMENDMENTS
22. 2013 NFPA 80 FIRE DOORS AND OTHER OPENING PROTECTIVE
23. 2013 NFPA 110 EMERGENCY AND STANDBY POWER SYSTEMS
24. 2009 NFPA 170 STANDARD FOR FIRE SAFETY AND EMERGENCY SYMBOLS
25. 2012 NFPA 2001 CLEAN AGENT FIRE EXTINGUISHING SYSTEMS
26. 2012 ICC 300-07 STANDARD ON BLEACHERS, FOLDING AND TELESCOPIC SEATING AND GRANDSTANDS
27. SFM 12-10-1 POWER OPERATED EXIT DOORS
28. SFM 12-10-2 SINGLE POINT LATCHING OR LOCKING DEVICES
29. SFM 12-10-3 EMERGENCY EXIT & PANIC HARDWARE
30. ASTM STANDARD CHANGES (EXAMPLE: ASTM E648-04 STANDARD TEST METHOD FOR CRITICAL RADIANT FLUX OF FLOOR)
31. 1999 UL 38 MANUAL OPERATED SIGNAL BOXES, WITH REVISIONS 2005 AS AMENDED
32. 2006 UL 268 SMOKE DETECTORS FOR FIRE PROTECTIVE SIGNALING SYSTEMS
33. 1998 UL 268A SMOKE DETECTORS DUCT APPLICATIONS WITH REVISIONS THROUGH OCTOBER 22 2003
34. 2005 UL 300 FIRE TESTING OF FIRE EXTINGUISHING SYSTEMS FOR PROTECTION OF RESTAURANT COOKING AREAS
35. 2007 UL 305 PANIC HARDWARE
36. 2003 UL 464 AUDIBLE SIGNAL APPLIANCES
37. 1999 UL 521 HEAT DETECTORS FOR FIRE PROTECTIVE SIGNALING SYSTEMS
38. 2003 UL 864 CONTROL UNITS FOR FIRE PROTECTIVE SIGNALING SYSTEMS, WITH REVISIONS THROUGH JULY 14 2005

AMERICANS WITH DISABILITIES ACT (A.D.A.) FEDERAL ACCESSIBILITY STANDARDS
2011 ACI 318, BUILDING CODE REQUIREMENTS FOR STRUCTURAL CONCRETE
2010 AISC MANUAL OF STEEL CONSTRUCTION
ASCE/SEJ 7-10, MINIMUM DESIGN LOADS FOR BUILDINGS AND OTHER STRUCTURES
NATIONAL DESIGN SPECIFICATION FOR WOOD CONSTRUCTION, 2005 ED.

LOAD CALCULATIONS

MCCA ELECTRICAL LOAD CALCULATION

<E> MCCA: 225A RATED, 3P, 4W, 208Y/120V,

A. CONSOLIDATED LOAD		
SUPPLY FAN S-1	26,947	VA
RETURN FAN R-1	6,016	VA
SUPPLY FAN S-2	2,702	VA
EXHAUST FAN E-2	2,378	VA
SUPPLY FAN S-3	1,261	VA
EXHAUST FAN E-3	865	VA
EXHAUST FAN E-4	1,261	VA
COOLING TOWER FAN	6,016	VA
PUMP CP-1	5,332	VA
PUMP CP-2	6,016	VA
Generator Circulator Pump	2,702	VA
AH-1	2,234	VA
AH-2	2,234	VA
AH-3	8,286	VA
SUB-TOTAL EXISTING LOAD	74,249	VA
B. LOADS REMOVED FROM DEMOLITION		
SUPPLY FAN S-1	26,947	VA
RETURN FAN R-1	6,016	VA
SUB-TOTAL DEMO LOAD	(32,963)	VA
C. ADDITIONAL LOAD FROM NEW PROJECT		
TEMPORARY FAN UNIT	2,702	VA
SUPPLY FAN ARRAY S-1 (4 Motors)	19,742	VA
SUB-TOTAL NEW LOAD	22,444	VA
TOTAL LOAD – EXISTING + NEW	63,729	VA
TOTAL CONNECTED LOAD	**177**	**AMPS**
225A @ 80% (NEC) ALLOWABLE LOAD	180	AMPS

BUILDING ELECTRICAL LOAD CALCULATION

<E> HSP: 1,000A, 3P, 4W, 208Y/120V

A. CONSOLIDATED LOAD FROM HSP (Based on 125% of PG&E Peak Demand Data and 80%PF)	178,125	VA
B. LOADS REMOVED FROM DEMOLITION		
SUPPLY FAN S-1	26,947	VA
RETURN FAN R-1	6,016	VA
SUB-TOTAL LOAD	(6,016)	VA
C. ADDITIONAL LOAD FROM NEW PROJECT		
SUPPLY FAN ARRAY S-1 (4 MOTORS)	19,742	VA
RETURN FAN R-1	6,016	VA
SUB-TOTAL NEW LOAD	25,758	VA
TOTAL LOAD – EXISTING + NEW	197,867	VA
TOTAL CONNECTED LOAD	**550**	**AMPS**
1,000A @ 80% (NEC) ALLOWABLE LOAD	800	AMPS

REGISTERED PROFESSIONAL ENGINEER — JAMES A. AJAK — No. E18290 — ELECTRICAL — STATE OF CALIFORNIA

CITY OF SAN LEANDRO — INCORPORATED 1872

BEFORE YOU DIG, CALL UNDERGROUND SERVICE ALERT 811

IT SHALL BE THE CONTRACTOR'S RESPONSIBILITY TO DETERMINE THE EXISTENCE AND LOCATION OF ALL UNDERGROUND UTILITIES. THOSE SHOWN REPRESENT THE BEST INFORMATION AVAILABLE TO THE CITY OF SAN LEANDRO AT THE TIME OF PREPARATION OF THESE PLANS. NO GUARANTEE IS MADE AS TO THE ACCURACY OF THIS INFORMATION.

NO.	DATE	REVISION

CITY OF SAN LEANDRO

DESIGNED BY		DATE
DRAWN BY	TP	DATE 07/24/14
PROJECT MGR.	MJG	DATE 7/31/14
TRANS ADMIN.	—	DATE —
SENIOR ENGR.	J.J.	DATE 8/1/14
APPROVED BY:		DATE 8/4/14

CITY ENGINEER, R.C.E. No. 34870

PUBLIC SAFETY
HVAC EQUIPMENT REPLACEMENT
ELECTRICAL NOTES, SYMBOLS & ABBREVIATIONS

E-0.0

AT FULL SIZE THIS LINE MEASURES 1"

SHEET 15 OF 23
JOB NO. 2013.0290
SCALE AS NOTED
DWG 3843 CASE 901

07/28/14 BID SET

K:\drawings\City of San Leandro\130340 Police Dept. AHU Replacement\130340E-0.0.dwg 7/31/2014 9:16 AM James Ajak

CERTIFICATE OF COMPLIANCE (Page 1 of 4) LTG-1C

Project Name: POLICE DEPARTMENT AHU REPLACEMENT		Date: 04/25/14
Project Address: 901 E. 14TH STREET, SAN LEANDRO, CA 94577	Climate Zone: 3	Building CFA :
		Unconditioned Floor Area:

General Information

Building Type: [X] Nonresidential [ ] High-Rise Residential [ ] Hotel/Motel [ ] Schools [ ] Relocate Public Schools [X] Conditioned Spaces [ ] Unconditioned Spaces

Phase of Construction: [ ] New Construction [ ] Addition [X] Alteration

Method of Compliance: [ ] Complete Building [X] Area Category [ ] Tailored

Documentation Author's Declaration Statement

- I certify that this Certificate of Compliance documentation is accurate and complete.

Name: THOMAS B. JUN	Signature :		
Company: SALAS O'BRIEN ENGINEERS, INC.		Date : 04/25/14	
Address: 305 SOUTH 11TH ST.		If applicable : CEA # CEPE #	
City/state/zip: SAN JOSE, CA 95112		Phone : (408) 282-1500	

Principal Lighting Designer's Declaration Statement

- I am eligible under Division 3 of the California Business and Professions Code to accept responsibility for the lighting design.
- This Certificate of Compliance identifies the lighting features and performance specifications required for compliance with Title 24, Pages 1 and 6 of the California Code of Regulations.
- The design features represented on this Certificate of Compliance are consistent with the information provided to document this design on the other applicable compliance forms, worksheets, calculations, plans and specifications submitted to the enforcement agency for approval with this building permit application.

Name: THOMAS B. JUN	Signature :		
Company: SALAS O'BRIEN ENGINEERS, INC.		Date : 04/25/14	
Address: 305 SOUTH 11TH ST.		License# E19320	
City/state/zip: SAN JOSE, CA 95112		Phone : (408) 282-1500	

Lighting Mandatory Measures

Indicate location on building plans of Mandatory Measures Note Block: THIS SHEET

LIGHTING COMPLIANCE FORMS & WORKSHEETS (check box if worksheet is included)

For detailed instructions on the use of this and all Energy Efficiency Standards compliance forms, please refer to the Nonresidential Manual published by the California Energy Commission.

[X]	LTG-1C Pages 1 through 4	Certificate of Compliance. All Pages required on plans for all submittals.
[ ]	LTG-2C	Lighting Controls Credit Worksheet
[X]	LTG-3C	Indoor Lighting Power Allowance
[ ]	LTG-4C Pages 1 through 4	Tailored Method Worksheet
[ ]	LTG-5C Pages 1 and 2	Line Voltage Track Lighting Worksheet

CERTIFICATE OF COMPLIANCE (Page 2 of 4) LTG-1C

INDOOR LIGHTING SCHEDULE and FIELD INSPECTION ENERGY CHECKLIST

Project Name: POLICE DEPARTMENT AHU REPLACEMENT — Date: 04/25/14

Installation Certificate, LTG-1-INST (Retain a copy and verify form is completed and signed.) — [ ] **Field Inspector**

Certificates of Acceptance, LTG-2A and LTG-3A (Retain a copy and verify form is completed and signed.) — [ ] **Field Inspector**

A separate Lighting Schedule Must Be Filled Out for Conditioned and Unconditioned Spaces Installed Lighting Power listed on this Lighting Schedule is only for [X] **CONDITIONED SPACE** [ ] **UNCONDITIONED SPACE**

[X] *The actual indoor lighting power listed below includes all installed permanent and portable lighting systems in accordance with § 146(a)*

[ ] *Only for offices: Up to the first 0.2 watts per square foot of portable lighting shall not be required to be included in the calculation of actual indoor lighting power density in accordance with the Exception to §146(a). All portable lighting in excess of 0.2 watts per square foot is totaled below.*

Luminaries Schedule (Type, Lamps, Ballasts) — **Installed Watts**

A	B	C	D	E		F	G	H	
Name or Item Tag	Complete Luminarie Description (i.e., 3 lamp fluorescent troffer, F32T8, one dimmable electronic ballast)		Watts per Luminaire[1]	How wattage was determined: CEC Default from NA8	According to §130 (d or e)	Number of Luminaries	Installed Watts (DxF)	Field Inspector [2] Pass	Fail
A	4' LED 3000 LUMENS		39	☐	☒	7	273	☐	☐
				☐	☐			☐	☐
				☐	☐			☐	☐
				☐	☐	

REFERENCE SHEET NOTES

1. EXISITNG PANEL TO BE MODIFIED. REFER TO SINGLE LINE DIAGRAM FOR ADDITIONAL REQUIREMENTS.
2. CONTRACTOR SHALL USE EXISITNG 20 AMP, 1-POLE CIRCUIT BREAKER FOR FIRE ALARM INTERFACE PANEL. COORDINATE ALL SHUTDOWNS WITH FACILITIES ENGINEER.
3. EXITING RETURN FAN 'RF-1' VFD TO BE DEMOLISHED AND REPLACED WITH NEW VFD. CONTRACTOR TO PROVIDE NEW LABEL TO MATCH DRAWINGS.
4. FURNISH AND INSTALL A 3-WAY LIGHT SWITCH RATED 20 AMP, 125 VOLTS. LIGHTS SHALL CONTROL GENERAL AREA LIGHTING IN SECOND FLOOR AIR HANDLING ROOM.

GENERAL SHEET NOTES

A. PREPARE A SPECIAL METHOD OF PROCEDURE & COORDINATE SHUTDOWN OF ANY DEVICE WITH OWNER. PROVIDE TEMPORARY POWER & LIGHTING AS NEEDED.

B. DEVICES SHOWN AS EXISTING SHALL REMAIN CONNECTED UNLESS OTHERWISE NOTED. WIRING DEVICES THAT MAY BE AFFECTED BY DEMOLITION OR REWIRING SHALL BE RECONNECTED.

C. ALL WALLS AND CEILINGS SHOWN ARE FIRE RATED. PROVIDE FIRE SEAL ON ALL PENETRATIONS. REFER TO DETAIL 8 ON E5.1 FOR MORE INFORMATION.

D. CONTRACTOR SHALL BE RESPONSIBLE FOR RETURNING ANY SURFACE DISTURBED BY CONSTRUCTION TO THE CONDITION & FINISH OF THE ADJACENT SURFACES.

E. ALL CONDUITS SHALL BE ROUTED OVERHEAD.

F. PROVIDE BLACK OR WHITE BACKLIT NAMEPLATE FOR CIRCUIT BREAKERS IDENTIFYING THE EQUIPMENT BEING SERVED.

G. MINIMUM WIRE SIZE FOR ALARM AND CONTROL CIRCUITS SHALL BE #14 AWG CU.

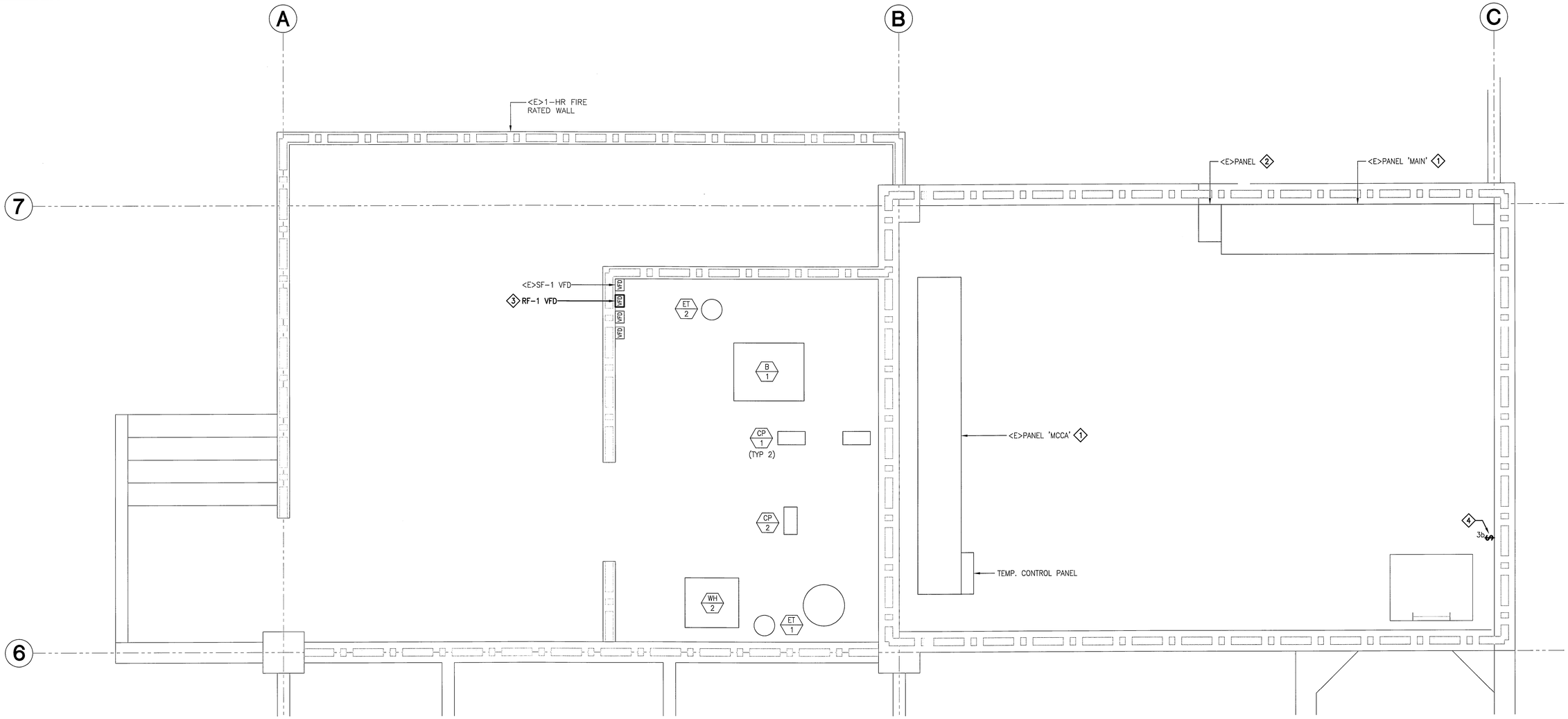

1 PARTIAL 1ST FLOOR PLAN
SCALE: 1/2" = 1' - 0"

0 2' 4'

E-1.0

REGISTERED PROFESSIONAL ENGINEER THOMAS R. TURK No. E19290 ELECTRICAL STATE OF CALIFORNIA

CITY OF SAN LEANDRO INCORPORATED 1872

BEFORE YOU DIG, CALL UNDERGROUND SERVICE ALERT 811

IT SHALL BE THE CONTRACTOR'S RESPONSIBILITY TO DETERMINE THE EXISTENCE AND LOCATION OF ALL UNDERGROUND UTILITIES. THOSE SHOWN REPRESENT THE BEST INFORMATION AVAILABLE TO THE CITY OF SAN LEANDRO AT THE TIME OF PREPARATION OF THESE PLANS. NO GUARANTEE IS MADE AS TO THE ACCURACY OF THIS INFORMATION.

NO.	DATE	REVISION

CITY OF SAN LEANDRO

DESIGNED BY _____ DATE _____
DRAWN BY TP DATE 07/24/14
PROJECT MGR. MJG DATE 7/31/14
TRANS ADMIN. — DATE —
SENIOR ENGR. T.J. DATE 8/1/14
APPROVED BY: DATE 8/14/14
CITY ENGINEER, R.C.E. No. 34870

PUBLIC SAFETY
HVAC EQUIPMENT REPLACEMENT
ELECTRICAL PARTIAL 1ST FLOOR PLAN

AT FULL SIZE THIS LINE MEASURES 1"

SHEET 17 OF 23
JOB NO. 2013.0290
SCALE AS NOTED
DWG 3845 CASE 901

07/28/14 BID SET

K:\drawings\City of San Leandro\130340 Police Dept. AHU Replacement\130340E-1.0.dwg 7/31/2014 9:23 AM James Ajak

REFERENCE SHEET NOTES

1. DISCONNECT AND REMOVE POWER TO MECHANICAL UNITS.
2. EXISTING LIGHT FIXTURE TO BE DEMOLISHED. DISCONNECT AND REMOVE CONDUIT AND CONDUCTORS BACK TO NEAREST JUNCTION BOX
3. EXISTING PIPE RISER TO BE REMOVED BY CITY PRIOR TO PROJECT.
4. FURNISH AND INSTALL TEMPORARY POWER TO FAN UNIT. REFER TO SINGLE LINE DIAGRAM FOR ADDITIONAL REQUIREMENTS.
5. DISCONNECT SWITCH TO BE DEMOLISHED.

GENERAL SHEET NOTES

A. PREPARE A SPECIAL METHOD OF PROCEDURE & COORDINATE SHUTDOWN OF ANY DEVICE WITH CITY. SHUTDOWN MUST BE PERFORMED AFTER HOURS. PROVIDE TEMPORARY POWER & LIGHTING AS NEEDED.

B. DEVICES SHOWN AS EXISTING SHALL REMAIN CONNECTED UNLESS OTHERWISE NOTED. WIRING DEVICES THAT MAY BE AFFECTED BY DEMOLITION OR REWIRING SHALL BE RECONNECTED.

C. FIRE SEAL ALL RATED PENETRATIONS.

D. CONTRACTOR SHALL BE RESPONSIBLE FOR RETURNING ANY SURFACE DISTURBED BY CONSTRUCTION TO THE CONDITION & FINISH OF THE ADJACENT SURFACES.

E. ALL CONDUITS SHALL BE ROUTED OVERHEAD.

F. PROVIDE BLACK OR WHITE BACKLIT NAMEPLATE FOR CIRCUIT BREAKERS IDENTIFYING THE EQUIPMENT BEING SERVED.

G. MINIMUM WIRE SIZE FOR ALARM AND CONTROL CIRCUITS SHALL BE #14 AWG CU.

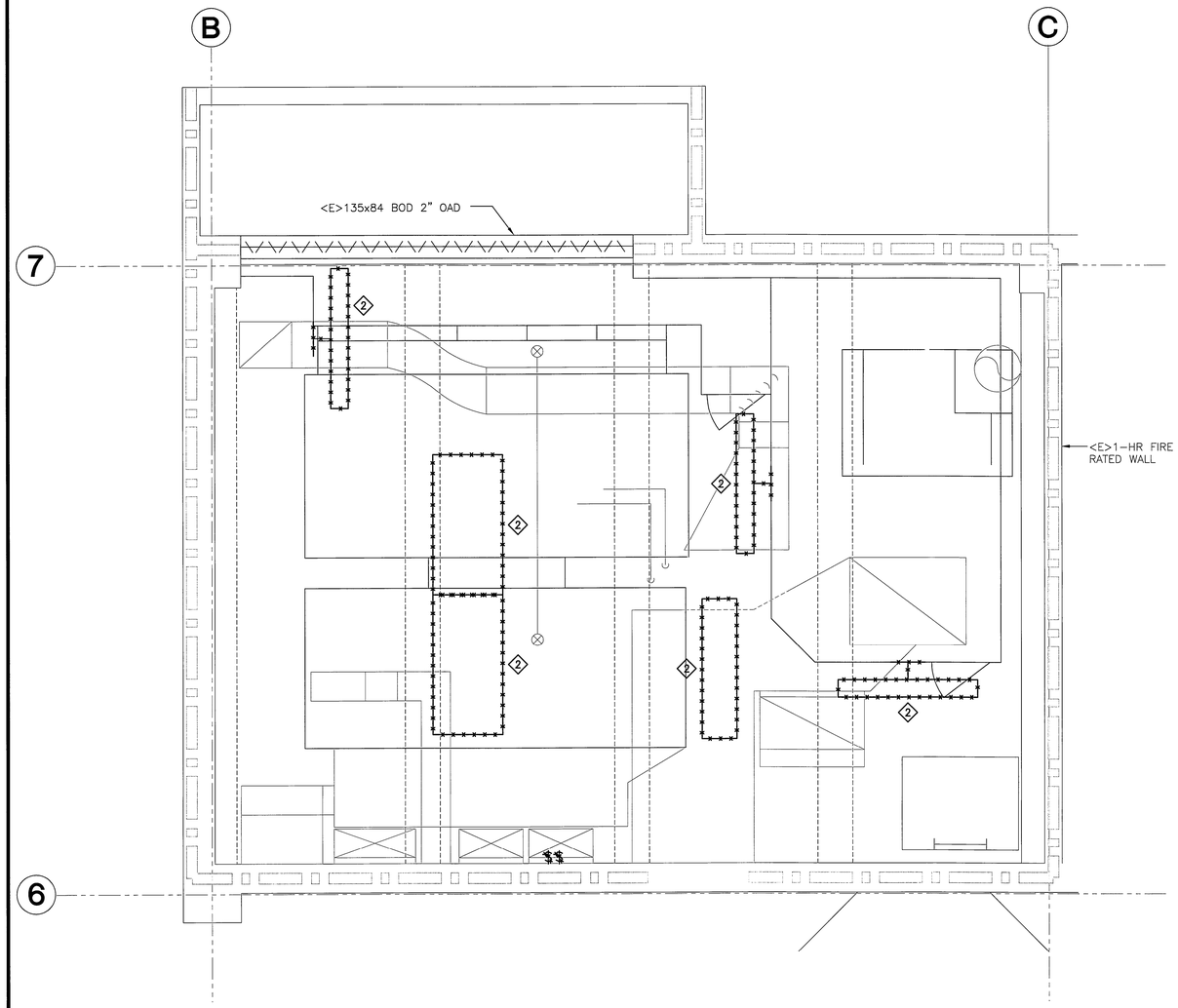

2 PARTIAL 2ND FLOOR PLAN UPPER VIEW - DEMO
SCALE: 1/2" = 1' - 0"

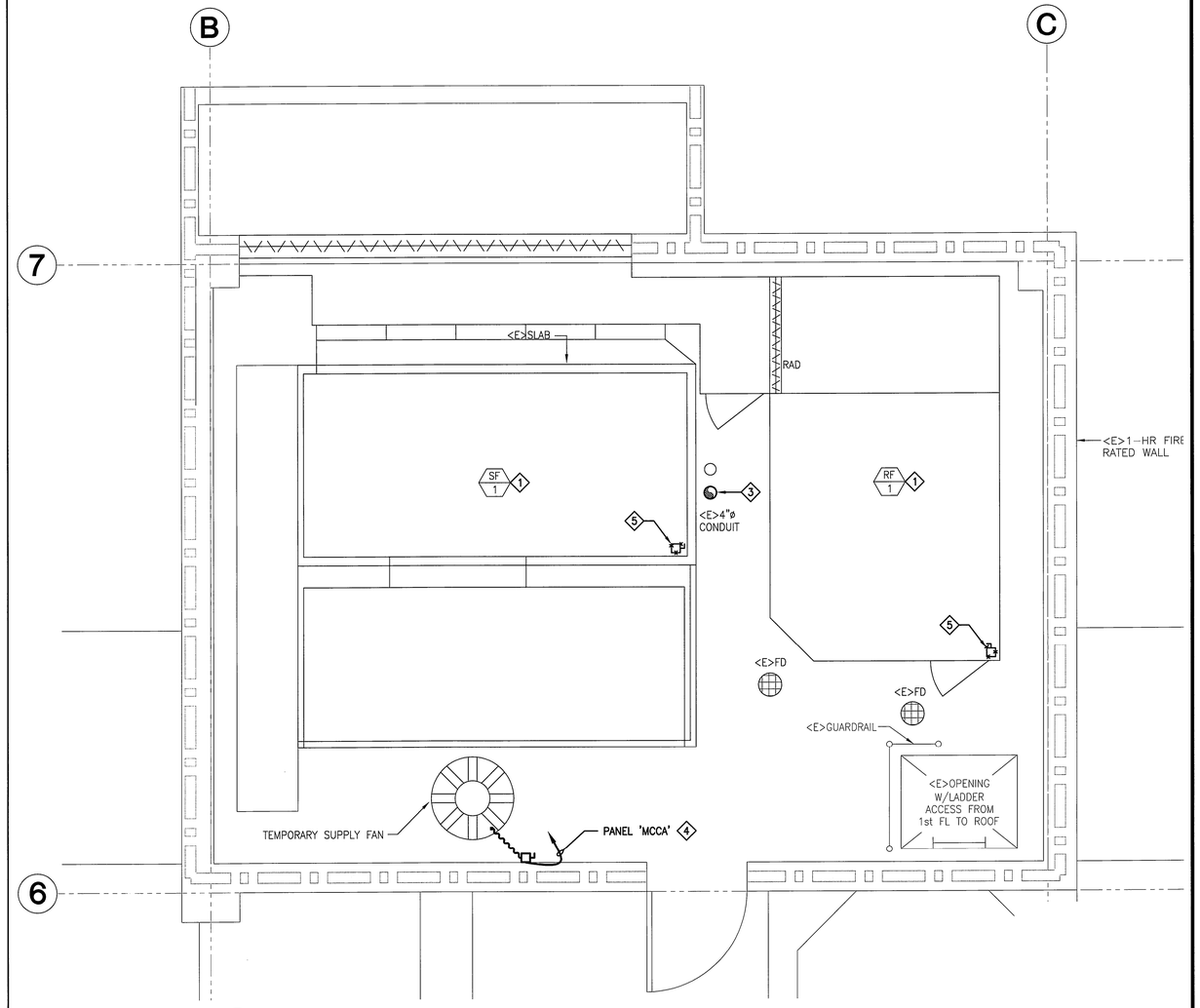

1 PARTIAL 2ND FLOOR PLAN LOWER VIEW - DEMO
SCALE: 1/2" = 1' - 0"

ED-1.1

REGISTERED PROFESSIONAL ENGINEER HOWARD R. LUM No. E18280 ELECTRICAL STATE OF CALIFORNIA

CITY OF SAN LEANDRO INCORPORATED 1872

BEFORE YOU DIG, CALL UNDERGROUND SERVICE ALERT 811

IT SHALL BE THE CONTRACTOR'S RESPONSIBILITY TO DETERMINE THE EXISTENCE AND LOCATION OF ALL UNDERGROUND UTILITIES. THOSE SHOWN REPRESENT THE BEST INFORMATION AVAILABLE TO THE CITY OF SAN LEANDRO AT THE TIME OF PREPARATION OF THESE PLANS. NO GUARANTEE IS MADE AS TO THE ACCURACY OF THIS INFORMATION.

NO.	DATE	REVISION

DESIGNED BY		DATE
DRAWN BY	TP	DATE 07/24/14
PROJECT MGR.	MATA	DATE 7/31/14
TRANS ADMIN.	—	DATE —
SENIOR ENGR.	T.J.	DATE 8/1/14
APPROVED BY:		DATE 8/19/14
CITY ENGINEER, R.C.E. No. 34870		

CITY OF SAN LEANDRO

PUBLIC SAFETY
HVAC EQUIPMENT REPLACEMENT
ELECTRICAL PARTIAL 2ND FLOOR PLAN - DEMO

AT FULL SIZE THIS LINE MEASURES 1"

SHEET 18 OF 23

JOB NO. 2013.0290

SCALE AS NOTED

DWG 3846 CASE 901

K:\drawings\City of San Leandro\130340 Police Dept. AHU Replacement\130340ED-1.1.dwg 7/31/2014 9:25 AM James Ajok

07/28/14 BID SET

REFERENCE SHEET NOTES

1. FURNISH AND INSTALL NEW POWER TO SUPPLY FAN ARRAY (TOTAL OF FOUR FANS). FURNISH AND INSTALL FUSIBLE DISCONNECT SWITCH FOR EACH FAN MOTOR AND MOUNT ON WALL. CONTRACTOR SHALL FIELD VERIFY LOCATION AND CONFIRM EQUIPMENT CLEARANCE PRIOR TO CONSTRUCTION. HOMERUN TO PANEL 'MCCA' VIA EXISTING VFD. VERIFY CONDUIT RUNS WITH BUILDING MANAGER. REFER TO SINGLE LINE DIAGRAM FOR ADDITIONAL REQUIREMENTS.
2. NEW RETURN FAN. FURNISH AND INSTALL FUSIBLE DISCONNECT SWITCH WITH AUXILIARY CONTACTS. HOMERUN TO PANEL 'HSP' VIA VFD. VERIFY CONDUIT RUNS WITH BUILDING MANAGER. CONTRACTOR SHALL FIELD VERIFY LOCATION AND CONFIRM EQUIPMENT CLEARANCE PRIOR TO CONSTRUCTION. REFER TO SINGLE LINE DIAGRAM FOR ADDITIONAL REQUIREMENTS.
3. FURNISH AND INSTALL LED FIXTURE (LITHONIA FEM4 LED 3L IMACD MVOLT WLF OR ENGINEER APPROVED EQUAL. EXTEND ¾"C. – (2)#10 + #10 GND FROM EXISTING LIGHTING CIRCUIT WITH NEW LIGHT SWITCHES.
4. NEW LIGHT FIXTURE SHALL BE ON AT ALL TIMES.
5. FURNISH AND INSTALL A 3-WAY LIGHT SWITCH RATED 20 AMP, 125 VOLTS. LIGHTS SHALL CONTROL GENERAL AREA LIGHTING IN SECOND FLOOR AIR HANDLING ROOM.
6. FURNISH AND INSTALL LIGTH SWITCH RATED 20 AMPS, 125 VOLTS, 3 WG WITH A LIGHTED HANDLE.

GENERAL SHEET NOTES

A. PREPARE A SPECIAL METHOD OF PROCEDURE & COORDINATE SHUTDOWN OF ANY DEVICE WITH CITY. SHUTDOWN MUST BE PERFORMED AFTER HOURS. PROVIDE TEMPORARY POWER & LIGHTING AS NEEDED.

B. DEVICES SHOWN AS EXISTING SHALL REMAIN CONNECTED UNLESS OTHERWISE NOTED. WIRING DEVICES THAT MAY BE AFFECTED BY DEMOLITION OR REWIRING SHALL BE RECONNECTED.

C. ALL WALLS AND CEILINGS SHOWN ARE FIRE RATED. PROVIDE FIRE SEAL ON ALL PENETRATIONS. REFER TO DETAIL 8 ON E5.1 FOR MORE INFORMATION.

D. CONTRACTOR SHALL BE RESPONSIBLE FOR RETURNING ANY SURFACE DISTURBED BY CONSTRUCTION TO THE CONDITION & FINISH OF THE ADJACENT SURFACES.

E. ALL CONDUITS SHALL BE ROUTED OVERHEAD.

F. PROVIDE BLACK OR WHITE BACKLIT NAMEPLATE FOR CIRCUIT BREAKERS IDENTIFYING THE EQUIPMENT BEING SERVED.

G. MINIMUM WIRE SIZE FOR ALARM AND CONTROL CIRCUITS SHALL BE #14 AWG CU.

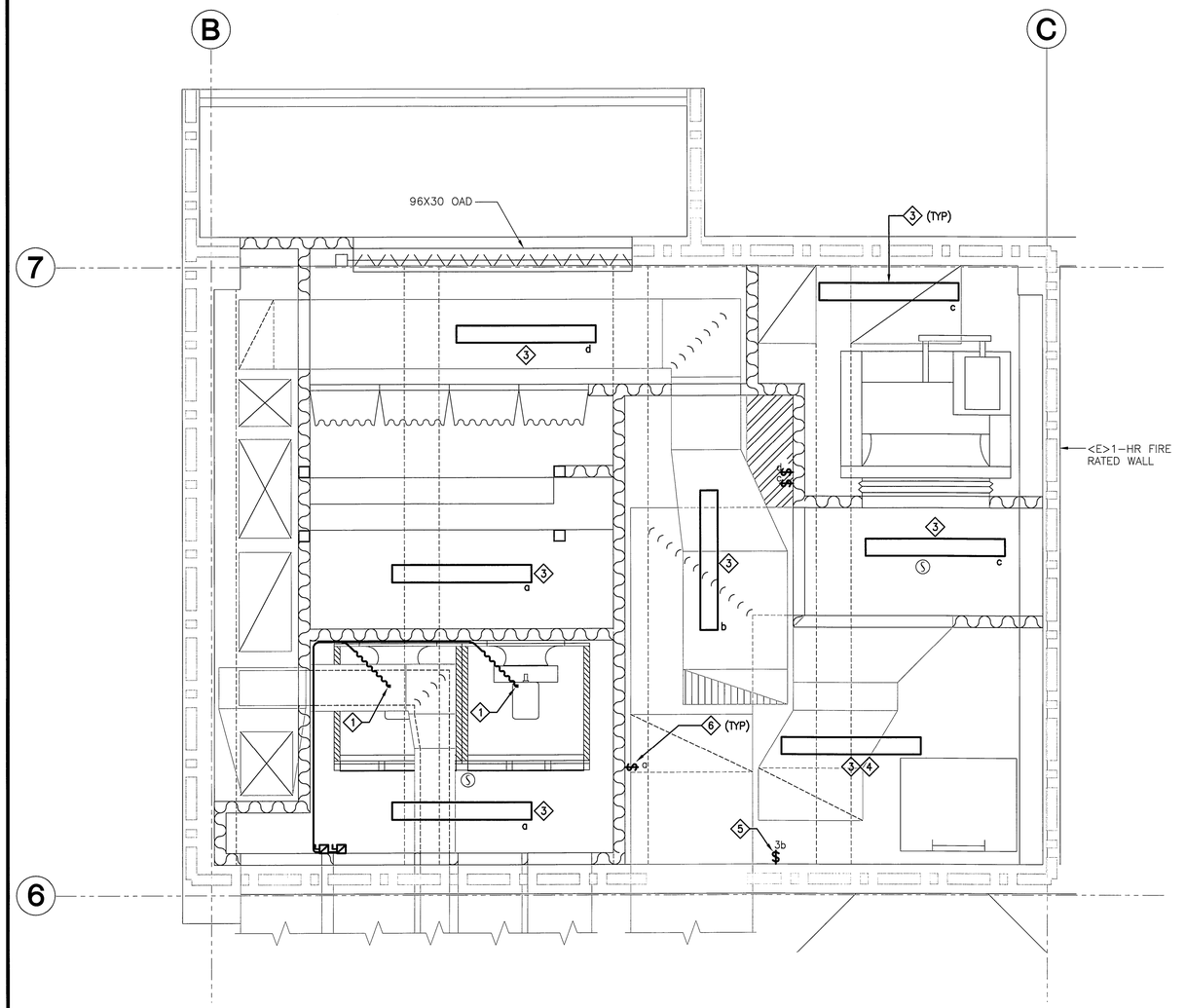

2 PARTIAL 2ND FLOOR PLAN UPPER VIEW - NEW
SCALE: 1/2" = 1' - 0"

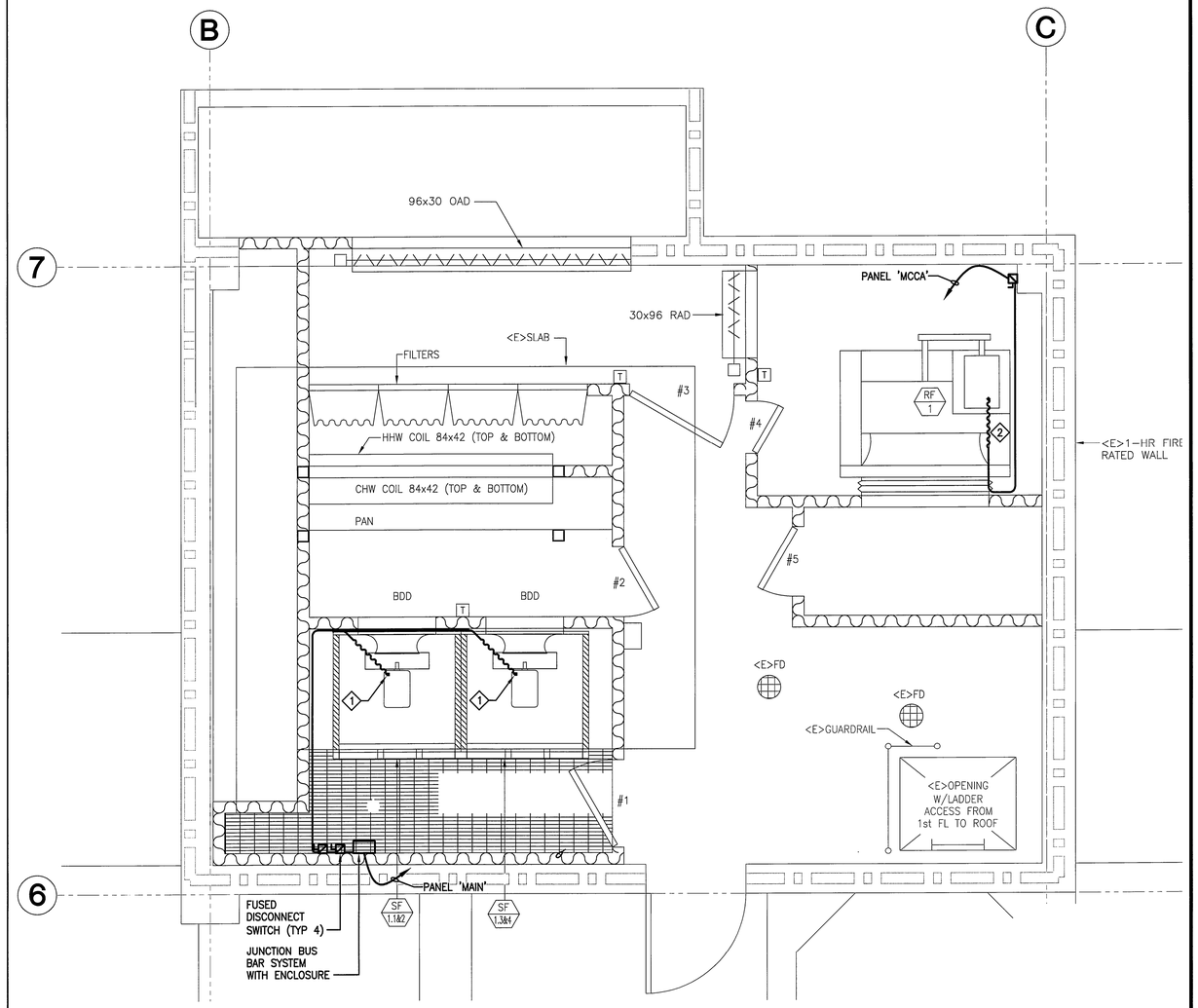

1 PARTIAL 2ND FLOOR PLAN LOWER VIEW - NEW
SCALE: 1/2" = 1' - 0"

E-1.1

REGISTERED PROFESSIONAL ENGINEER THOMAS P. LUIN No. E10290 ELECTRICAL STATE OF CALIFORNIA

CITY OF SAN LEANDRO INCORPORATED 1872

BEFORE YOU DIG, CALL UNDERGROUND SERVICE ALERT 811

IT SHALL BE THE CONTRACTOR'S RESPONSIBILITY TO DETERMINE THE EXISTENCE AND LOCATION OF ALL UNDERGROUND UTILITIES. THOSE SHOWN REPRESENT THE BEST INFORMATION AVAILABLE TO THE CITY OF SAN LEANDRO AT THE TIME OF PREPARATION OF THESE PLANS. NO GUARANTEE IS MADE AS TO THE ACCURACY OF THIS INFORMATION.

NO.	DATE	REVISION

CITY OF SAN LEANDRO

DESIGNED BY		DATE	
DRAWN BY	TP	DATE	07/24/14
PROJECT MGR.	MJG	DATE	7/31/14
TRANS ADMIN.		DATE	
SENIOR ENGR.	T.J.	DATE	8/1/14
APPROVED BY:		DATE	8/8/14

CITY ENGINEER, R.C.E. No. 34870

PUBLIC SAFETY
HVAC EQUIPMENT REPLACEMENT
ELECTRICAL PARTIAL 2ND FLOOR PLAN - NEW

AT FULL SIZE THIS LINE MEASURES 1"

SHEET 19 OF 23
JOB NO. 2013.0290
SCALE AS NOTED
DWG 3847 CASE 901

K:\drawings\City of San Leandro\130340 Police Dept. AHU Replacement\130340E-1.1.dwg 7/31/2014 9:23 AM James Ajok

07/28/14 BID SET

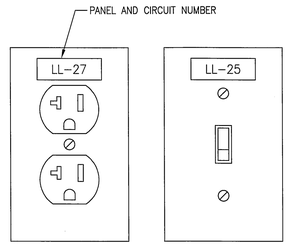

NOTE:

1. LABEL ALL DEVICES AND J-BOXES USING MACHINE CLEAR TAPE WITH BLACK LETTERS.

7 DEVICE LABELING DETAIL

SCALE: N.T.S.

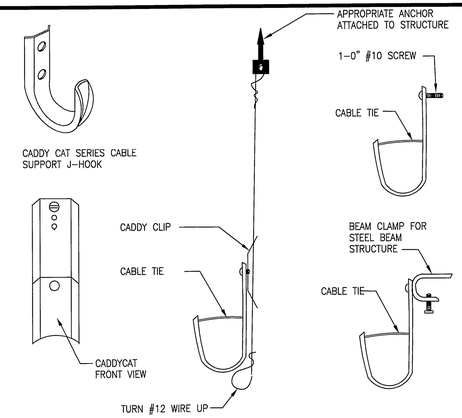

4 CABLE SUPORT "J-HOOK" DETAIL

SCALE: N.T.S.

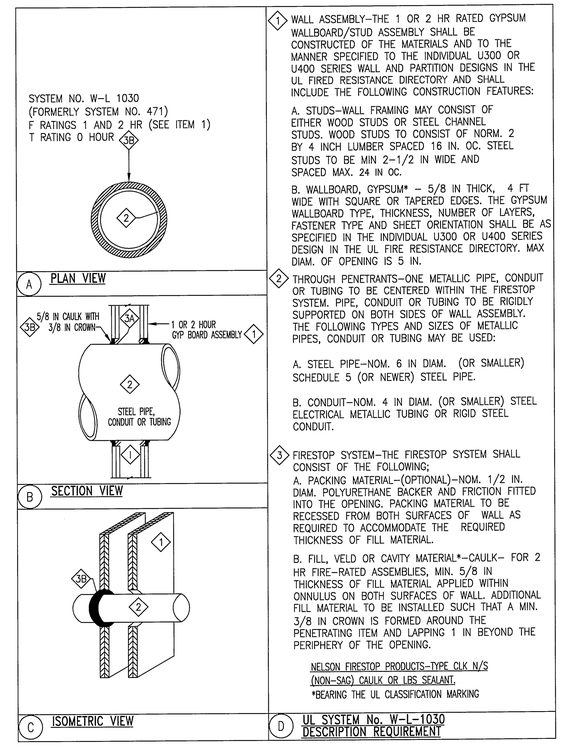

1. WALL ASSEMBLY–THE 1 OR 2 HR RATED GYPSUM WALLBOARD/STUD ASSEMBLY SHALL BE CONSTRUCTED OF THE MATERIALS AND TO THE MANNER SPECIFIED TO THE INDIVIDUAL U300 OR U400 SERIES WALL AND PARTITION DESIGNS IN THE UL FIRED RESISTANCE DIRECTORY AND SHALL INCLUDE THE FOLLOWING CONSTRUCTION FEATURES:

   A. STUDS–WALL FRAMING MAY CONSIST OF EITHER WOOD STUDS OR STEEL CHANNEL STUDS. WOOD STUDS TO CONSIST OF NORM. 2 BY 4 INCH LUMBER SPACED 16 IN. OC. STEEL STUDS TO BE MIN 2–1/2 IN WIDE AND SPACED MAX. 24 IN OC.

   B. WALLBOARD, GYPSUM* – 5/8 IN THICK, 4 FT WIDE WITH SQUARE OR TAPERED EDGES. THE GYPSUM WALLBOARD TYPE, THICKNESS, NUMBER OF LAYERS, FASTENER TYPE AND SHEET ORIENTATION SHALL BE AS SPECIFIED IN THE INDIVIDUAL U300 OR U400 SERIES DESIGN IN THE UL FIRE RESISTANCE DIRECTORY. MAX DIAM. OF OPENING IS 5 IN.

2. THROUGH PENETRANTS–ONE METALLIC PIPE, CONDUIT OR TUBING TO BE CENTERED WITHIN THE FIRESTOP SYSTEM. PIPE, CONDUIT OR TUBING TO BE RIGIDLY SUPPORTED ON BOTH SIDES OF WALL ASSEMBLY. THE FOLLOWING TYPES AND SIZES OF METALLIC PIPES, CONDUIT OR TUBING MAY BE USED:

   A. STEEL PIPE–NOM. 6 IN DIAM. (OR SMALLER) SCHEDULE 5 (OR NEWER) STEEL PIPE.

   B. CONDUIT–NOM. 4 IN DIAM. (OR SMALLER) STEEL ELECTRICAL METALLIC TUBING OR RIGID STEEL CONDUIT.

3. FIRESTOP SYSTEM–THE FIRESTOP SYSTEM SHALL CONSIST OF THE FOLLOWING;
   A. PACKING MATERIAL–(OPTIONAL)–NOM. 1/2 IN. DIAM. POLYURETHANE BACKER AND FRICTION FITTED INTO THE OPENING. PACKING MATERIAL TO BE RECESSED FROM BOTH SURFACES OF WALL AS REQUIRED TO ACCOMMODATE THE REQUIRED THICKNESS OF FILL MATERIAL.

   B. FILL, VELD OR CAVITY MATERIAL*–CAULK– FOR 2 HR FIRE–RATED ASSEMBLIES, MIN. 5/8 IN THICKNESS OF FILL MATERIAL APPLIED WITHIN ONNULUS ON BOTH SURFACES OF WALL. ADDITIONAL FILL MATERIAL TO BE INSTALLED SUCH THAT A MIN. 3/8 IN CROWN IS FORMED AROUND THE PENETRATING ITEM AND LAPPING 1 IN BEYOND THE PERIPHERY OF THE OPENING.

   NELSON FIRESTOP PRODUCTS–TYPE CLK N/S (NON–SAG) CAULK OR LBS SEALANT.
   *BEARING THE UL CLASSIFICATION MARKING

D UL SYSTEM No. W-L-1030 DESCRIPTION REQUIREMENT

2 UL THROUGH PENETRATION FIRESTOP SYSTEM W-L 1030 CONDUIT THROUGH GYPSUM WALLBOARD F=1-2, T=0

SCALE: N.T.S.

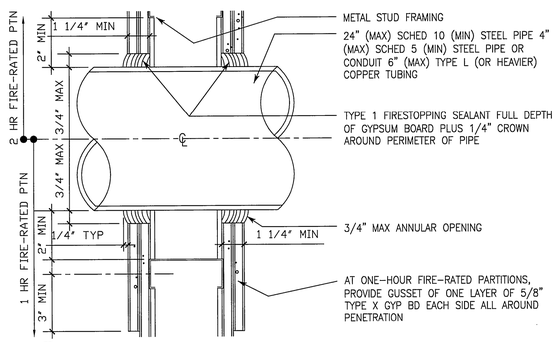

A STEEL PIPE, CONDUIT/EMT, COPPER TUBE (UL W-L-1010)
System No. W-J-1067
F Ratings – 1 and 2 Hr (See Items 1 and 3) T Rating – 0 Hr
L Rating at Ambient – Less Than 1 CFM/Sq Ft
L Rating at 400 F– 4 CFM/Sq Ft

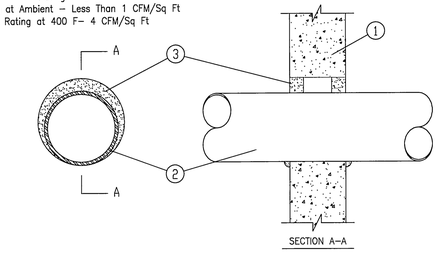

1. WALL ASSEMBLY –– MIN 3–3/4 IN. AND 5 IN. THICK REINFORCED LIGHTWEIGHT OR NORMAL WEIGHT (100–150 PCF) CONCRETE FOR 1 AND 2 H RATED ASSEMBLIES, RESPECTIVELY. WALL MAY ALSO BE CONSTRUCTED OF ANY UL CLASSIFIED CONCRETE BLOCKS. MAX DIAM OF OPENING IS 32–1/4 IN.
   SEE CONCRETE BLOCKS (CAZT) CATEGORY IN THE FIRE RESISTANCE DIRECTORY FOR NAMES OF MANUFACTURERS.
2. THROUGH––PENETRANTS –– ONE METALLIC PIPE, CONDUIT OR TUBING TO BE CENTERED WITHIN THE FIRESTOP SYSTEM. THE ANNULAR SPACE SHALL BE MIN 0 IN. TO MAX 2–1/4 IN. PIPE MAY BE INSTALLED WITH CONTINUOUS POINT CONTACT. PIPE, CONDUIT OR TUBE MAY BE INSTALLED AT AN AN ANGLE NOT GREATER THAN 45 DEGREES FROM PERPENDICULAR. PIPE, CONDUIT OR TUBING TO BE RIGIDLY SUPPORTED ON BOTH SIDES OF WALL ASSEMBLY. THE FOLLOWING TYPES AND SIZES OF METALLIC PIPES, CONDUITS OR TUBING MAY BE USED:
   A. STEEL PIPE–– NOM 30 IN. DIAM (OR SMALLER) SCHEDULE 10 (OR HEAVIER) STEEL PIPE.
   B. IRON PIPE–– NOM 30 IN. DIAM (OR SMALLER) CAST OR DUCTILE IRON PIPE.
   C. CONDUIT –– NOM 4 IN. DIAM (OR SMALLER) STEEL ELECTRICAL METALLIC TUBING OR 6 IN. DIAM (OR SMALLER) STEEL CONDUIT.
   D. COPPER TUBING–– NOM 6 IN. DIAM (OR SMALLER) TYPE L (OR HEAVIER) COPPER TUBING.
   E. COPPER PIPE–– NOM 6 IN. DIAM (OR SMALLER) REGULAR (OR HEAVIER) COPPER PIPE.
3. FILL, VOID OR CAVITY MATERIAL–– MIN 5/8 IN. THICKNESS OF FILL MATERIAL APPLIED WITHIN THE ANNULUS, FLUSH WITH BOTH SURFACES OF WALL. AT THE POINT OR CONTINUOUS CONTACT LOCATIONS BETWEEN PIPE AND WALL, A MIN 1/2 IN. DIAM BEAD OF FILL MATERIAL SHALL BE APPLIED AT THE PIPE–WALL INTERFACE ON BOTH SURFACES OF WALL.
   HILTI CONSTRUCTION CHEMICALS, DIV OF
   HILTI INC–– FS–ONE SEALANT
   *BEARING THE UL CLASSIFICATION MARK

B PENETRATION AT CONCRETE WALL

8 WALL PENETRATION DETAIL

SCALE: N.T.S.

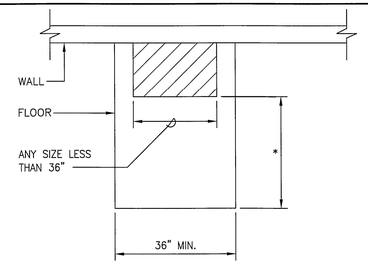

WALL OR FLOOR MOUNTED PANELS **

* WHICH INCLUDES POWER PANELS, CONTRACTORS CONTROL CABINETS, DISCONNECT SWITCHES, MOTOR STARTERS, TIME CLOCK AND SIMILAR EQUIPMENT.

** OSHA NEC REQUIRED. CLEAR WORKING SPACE AS BASED ON NEC 110.16(a) CONDITION 20 150 VOLT TO GROUND 3–1/2 FEET, FOR VOLTAGES HIGHER THAN 600 V: REFER TO NEC ARTICLE 710.

6 EQUIPMENT CLEARANCE DETAIL

SCALE: N.T.S.

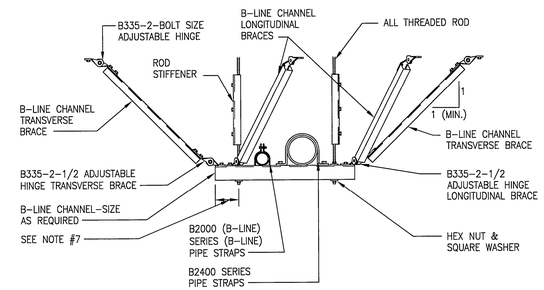

NOTES:

1. B335–2 (B–LINE) ADJUSTABLE HINGES FOR LONGITUDINAL BRACES MAY BE ATTACHED ON EITHER SIDE ADJACENT TO THE ALL THREAD ROD, OR ATTACHED TO THE ALL THREAD ROD ITSELF.
2. B335–2 (B–LINE) ADJUSTABLE HINGES FOR TRANSVERSE BRACES MAY BE ATTACHED TO THE ALL THREAD ROD.
3. TWO B335–2 (B–LINE) ADJUSTABLE HINGES MAY BE ATTACHED TO THE STRUT TRAPEZE USING THE SAME BOLT OR ALL THREAD ROD.
4. IT IS NOT NECESSARY TO INSTALL BOTH TRANSVERSE BRACES AND LONGITUDINAL BRACES ON THE SAME TRAPEZE SUPPORT. EITHER SET OF BRACES MAY BE REMOVED TO FORM A LONGITUDINAL BRACE ONLY OR A TRANSVERSE BRACE ONLY IF DESIRED.
5. LONGITUDINAL BRACES, WHEN NEEDED, MUST BE INSTALLED AT BOTH ENDS OF TRAPEZE.
6. THE EQUIPMENT SHOWN ON THIS TRAPEZE SUPPORT IS GENERIC IN NATURE. ANY NUMBER OF PIPES, CONDUITS, DUCTWORK OR CABLE TRAY MAY BE SUPPORTED FOLLOWING THE SYSTEM WEIGHT AND SUPPORT SPANS LISTED IN B–LINE SEISMIC RESTRAINTS CATALOG.
7. DETERMINE LENGTH OF TRAPEZE, MAKING SURE SUFFICIENT LENGTH IS ADDED TO ATTACH THE ALL THREAD ROD AND BRACING ATTACHMENTS.

3 TYPICAL TRAPEZE DETAIL

SCALE: N.T.S.

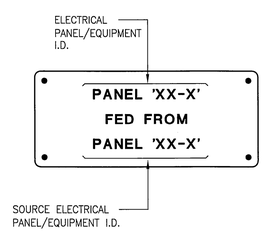

NOTES:

1. ALL NEW ELECTRICAL EQUIPMENT SHALL HAVE A NAMEPLATE.
2. EACH NAMEPLATE SHOULD ALSO INCLUDE ELECTRICAL SOURCE.

5 NAMEPLATE DETAIL

SCALE: N.T.S.

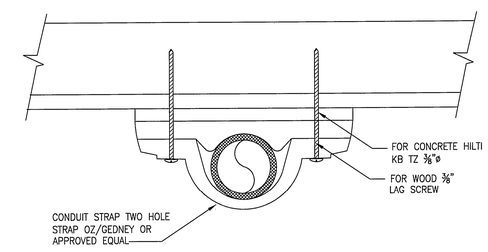

1 CONDUIT SUPPORT DETAIL

SCALE: N.T.S.

REGISTERED PROFESSIONAL ENGINEER THOMAS B. LINK No. E16950 ELECTRICAL STATE OF CALIFORNIA

CITY OF SAN LEANDRO INCORPORATED 1872

BEFORE YOU DIG, CALL UNDERGROUND SERVICE ALERT 811

IT SHALL BE THE CONTRACTOR'S RESPONSIBILITY TO DETERMINE THE EXISTENCE AND LOCATION OF ALL UNDERGROUND UTILITIES. THOSE SHOWN REPRESENT THE BEST INFORMATION AVAILABLE TO THE CITY OF SAN LEANDRO AT THE TIME OF PREPARATION OF THESE PLANS. NO GUARANTEE IS MADE AS TO THE ACCURACY OF THIS INFORMATION.

NO.	DATE	REVISION

CITY OF SAN LEANDRO

DESIGNED BY		DATE
DRAWN BY	TP	DATE 07/24/14
PROJECT MGR.	MJG	DATE 7/31/14
TRANS ADMIN.		DATE —
SENIOR ENGR.		DATE 8/1/14
APPROVED BY:		DATE 8/4/14

CITY ENGINEER, R.C.E. No. 34870

PUBLIC SAFETY
HVAC EQUIPMENT REPLACEMENT
ELECTRICAL DETAILS

E-5.1

AT FULL SIZE THIS LINE MEASURES 1"

SHEET 20 OF 23
JOB NO. 2013.0290
SCALE AS NOTED
DWG 3848 CASE 901

07/28/14 BID SET

K:\drawings\City of San Leandro\130340 Police Dept. AHU Replacement\130340E-5.1.dwg 7/31/2014 9:22 AM James Ajok

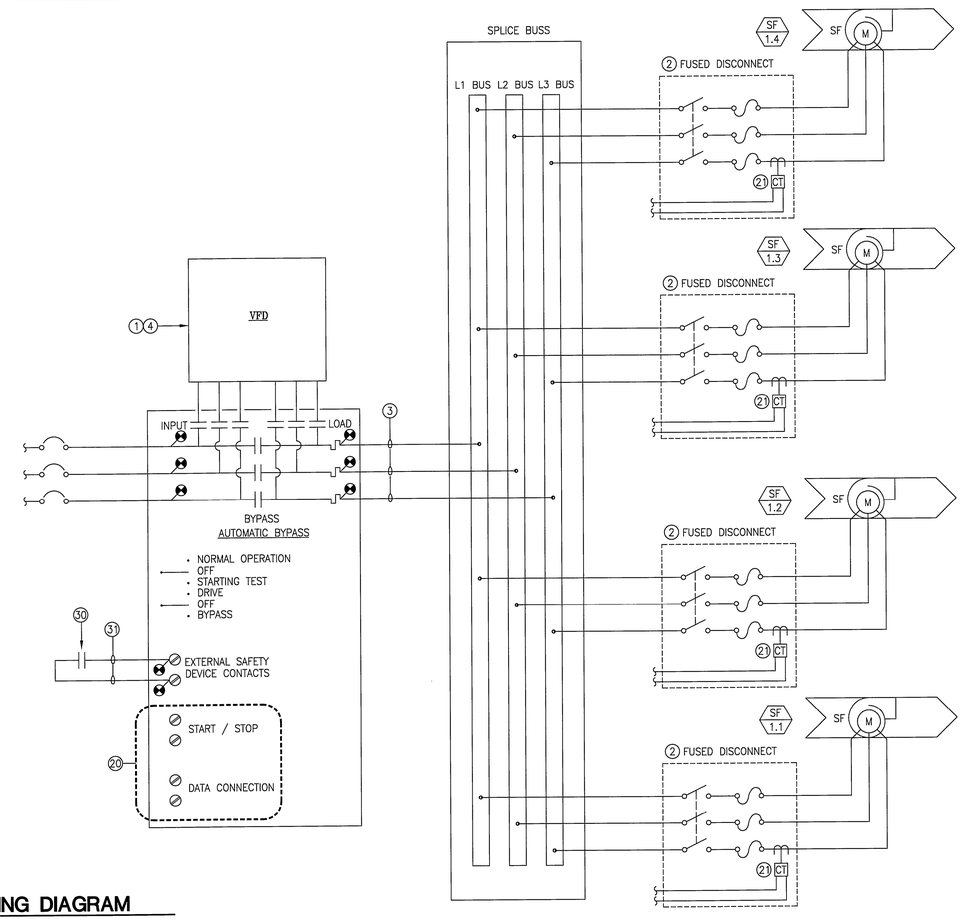

REFERENCE DETAIL NOTES

ELECTRICAL:

1. NEW VARIABLE FREQUENCY DRIVE (VFD).
2. NEW FUSED DISCONNECT SWITCH.
3. POWER WIRING, SEE ONE LINE DIAGRAM.
4. VFD DRIVE MANUFACTURE REPRESENTATIVE WILL SET THE MOTOR OVERLOAD PROTECTION TO MATCH THE FAN ARRAY MOTORS. SUBMIT SETTING POINT WITH RECORD DRAWING MARKUPS.

CONTROLS: (NOT IN CONTRACT; BY CITY)

20. ALL CONTROLS CONNECT TO THE VFD TO REMAIN.
21. CITY CONTROLS CONTRACTOR TO PROVIDE & INSTALL CT'S TO MONITOR FAN STATUS.

FIRE ALARM: (NOT IN CONTRACT; BY CITY)

30. INSTALL <N> RELAY IN PANEL 'F.A.I.P.' – SEE 3/M5.3.
31. CONTRACTOR TO INSTALL FIRE ALARM SHUTDOWN WIRING. REMOVE JUMPER & WIRE ACROSS "EXTERNAL SAFETY DEVICE" CONTACTS. VERIFY THAT THE CONTACTS USED WILL SHUT THE FAN DOWN IN NORMAL AND BYPASS MODES. WIRES SHALL BE TERMINATED IN THE VFD BY THE MANUFACTURE REPRESENTATIVE.

1 FAN ARRAY WIRING DIAGRAM

SCALE: N.T.S.

REGISTERED PROFESSIONAL ENGINEER — THOMAS B. JAY — No. E18920 — ELECTRICAL — STATE OF CALIFORNIA

CITY OF SAN LEANDRO — INCORPORATED 1872

BEFORE YOU DIG, CALL UNDERGROUND SERVICE ALERT 811

IT SHALL BE THE CONTRACTOR'S RESPONSIBILITY TO DETERMINE THE EXISTENCE AND LOCATION OF ALL UNDERGROUND UTILITIES. THOSE SHOWN REPRESENT THE BEST INFORMATION AVAILABLE TO THE CITY OF SAN LEANDRO AT THE TIME OF PREPARATION OF THESE PLANS. NO GUARANTEE IS MADE AS TO THE ACCURACY OF THIS INFORMATION.

NO.	DATE	REVISION

CITY OF SAN LEANDRO

DESIGNED BY		DATE
DRAWN BY	TP	DATE 07/24/14
PROJECT MGR.	NGTH	DATE 7/31/14
TRANS ADMIN.	—	DATE —
SENIOR ENGR.	T.J.	DATE 8/1/14
APPROVED BY:		DATE 8/4/14
CITY ENGINEER, R.C.E. No. 34870		

PUBLIC SAFETY HVAC EQUIPMENT REPLACEMENT ELECTRICAL DETAILS

E-5.2

AT FULL SIZE THIS LINE MEASURES 1"

SHEET 21 OF 23

JOB NO. 2013.0290

SCALE AS NOTED

DWG 3849 CASE 901

07/28/14 BID SET

K:\drawings\City of San Leandro\130340 Police Dept. AHU Replacement\130340E-5.2.dwg 7/31/2014 9:21 AM James Ajok

REFERENCE SHEET NOTES

1. DISCONNECT AND REMOVE POWER TO EXISTING MECHANICAL UNITS.
2. FURNISH AND INSTALL NEW POWER TO SUPPLY FAN ARRAY (TOTAL OF FOUR FANS). FURNISH AND INSTALL FUSIBLE DISCONNECT SWITCH FOR EACH FAN MOTOR AND MOUNT ON WALL. CONTRACTOR SHALL FIELD VERIFY LOCATION AND CONFIRM EQUIPMENT CLEARANCE PRIOR TO CONSTRUCTION. HOMERUN TO PANEL 'MCCA' VIA EXISTING VFD.
3. NEW RETURN FAN. FURNISH AND INSTALL CIRCUIT BREAKER AND FUSIBLE DISCONNECT SWITCH WITH AUXILIARY CONTACTS. CIRCUIT BREAKER A.I.C. RATING SHALL MATCH EXISTING. CONTRACTOR TO HIRE A THIRD PARTY TESTING AGENCY TO PERFORM ACCEPTANCE TESTING PER NETA ATS. HOMERUN TO PANEL 'HSP' VIA NEW VFD. VFD SHALL BE PROVIDED BY MECHANICAL CONTRACTOR AND INSTALLED BY ELECTRICAL CONTRACTOR. CONTRACTOR SHALL FIELD VERIFY LOCATION AND CONFIRM EQUIPMENT CLEARANCE PRIOR TO CONSTRUCTION.
4. FURNISH AND INSTALL A NEW BUS BAR SYSTEM (HOFFMAN BUS BAR SYSTEM OR ENGINEER APPROVED EQUAL). BUS BAR SYSTEM SHALL BE U.L. LISTED AND RATED A MINIMUM OF 100 AMPS, 208V/120, 3-PHASE, 3-WIRE. BUSSING SHALL BE TIN PLATED COPPER. CONTRACTOR SHALL SUBMIT DOCUMENTATION FOR APPROVAL.
5. NEW TEMPORARY FAN UNIT. FURNISH AND INSTALL NEW POWER FOR UNIT WHICH WILL INCLUDE BUT NOT LIMITED TO: CIRCUIT BREAKER, FUSIBLE DISCONNECT SWITCH, CONDUIT, AND CONDUCTORS. CONTRACTOR SHALL FIELD VERIFY LOCATION AND CONFIRM WORKING CLEARANCE PRIOR TO INSTALLATION.

GENERAL SHEET NOTES

A. PREPARE A SPECIAL METHOD OF PROCEDURE & COORDINATE SHUTDOWN OF ANY DEVICE WITH CITY. SHUTDOWN MUST BE PERFORMED AFTER HOURS. PROVIDE TEMPORARY POWER & LIGHTING AS NEEDED.

B. DEVICES SHOWN AS EXISTING SHALL REMAIN CONNECTED UNLESS OTHERWISE NOTED. WIRING DEVICES THAT MAY BE AFFECTED BY DEMOLITION OR REWIRING SHALL BE RECONNECTED.

C. FIRE SEAL ALL RATED PENETRATIONS.

D. CONTRACTOR SHALL BE RESPONSIBLE FOR RETURNING ANY SURFACE DISTURBED BY CONSTRUCTION TO THE CONDITION & FINISH OF THE ADJACENT SURFACES.

E. ALL CONDUITS SHALL BE ROUTED OVERHEAD.

F. PROVIDE BLACK OR WHITE BACKLIT NAMEPLATE FOR CIRCUIT BREAKERS IDENTIFYING THE EQUIPMENT BEING SERVED.

G. MINIMUM WIRE SIZE FOR ALARM AND CONTROL CIRCUITS SHALL BE #14 AWG CU (BY CITY CONTRACTOR).

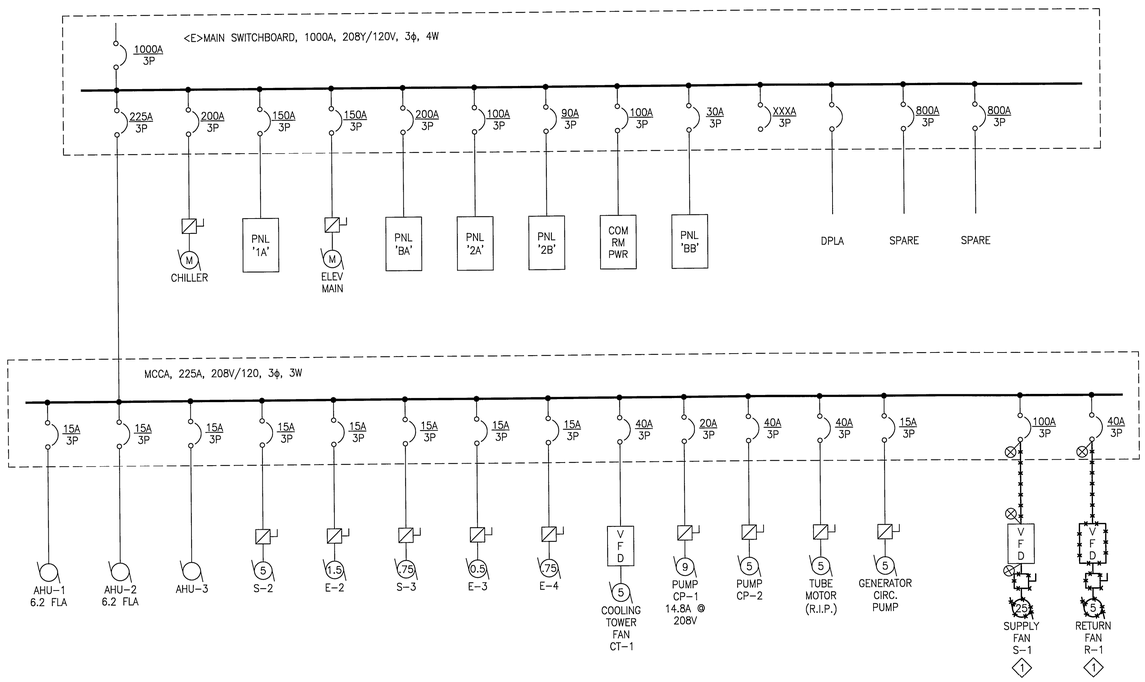

2 SINGLE LINE DIAGRAM - DEMO WORK

SCALE: N.T.S.

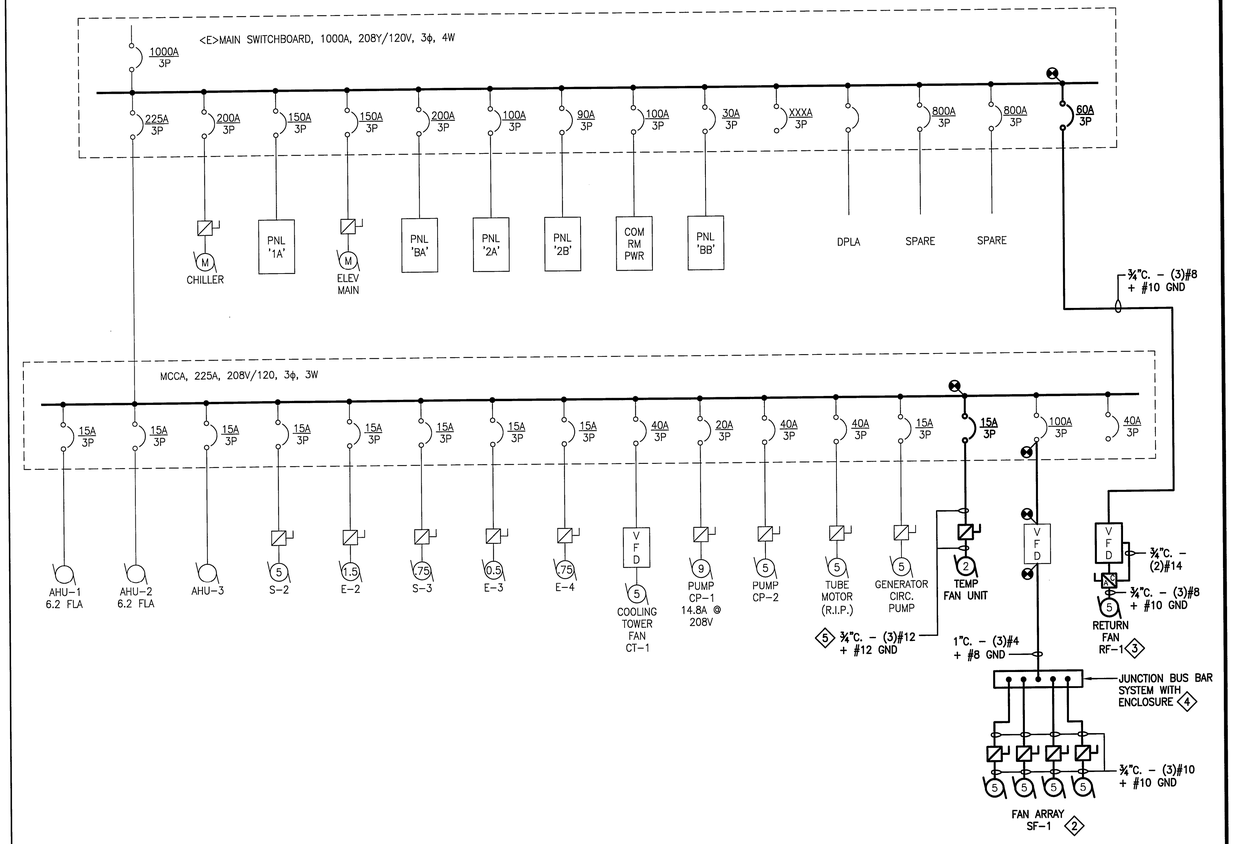

1 SINGLE LINE DIAGRAM - NEW WORK

SCALE: N.T.S.

REGISTERED PROFESSIONAL ENGINEER — THOMAS B. POW — No. E 86520 — ELECTRICAL — STATE OF CALIFORNIA

CITY OF SAN LEANDRO — INCORPORATED 1872

BEFORE YOU DIG, CALL UNDERGROUND SERVICE ALERT 811

IT SHALL BE THE CONTRACTOR'S RESPONSIBILITY TO DETERMINE THE EXISTENCE AND LOCATION OF ALL UNDERGROUND UTILITIES. THOSE SHOWN REPRESENT THE BEST INFORMATION AVAILABLE TO THE CITY OF SAN LEANDRO AT THE TIME OF PREPARATION OF THESE PLANS. NO GUARANTEE IS MADE AS TO THE ACCURACY OF THIS INFORMATION.

NO.	DATE	REVISION

DESIGNED BY		DATE
DRAWN BY	TP	DATE 07/24/14
PROJECT MGR.	MJG	DATE 7/31/14
TRANS ADMIN.	—	DATE —
SENIOR ENGR.	N.J.	DATE 8/1/14
APPROVED BY		DATE 8/4/14

CITY ENGINEER, R.C.E. No. 34870

CITY OF SAN LEANDRO

PUBLIC SAFETY
HVAC EQUIPMENT REPLACEMENT
ELECTRICAL
SINGLE LINE DIAGRAM

E-7.1

AT FULL SIZE THIS LINE MEASURES 1"

SHEET 22 OF 23

JOB NO. 2013.0290

SCALE AS NOTED

DWG 3850 CASE 901

07/28/14 BID SET

K:\drawings\City of San Leandro\130340 Police Dept. AHU Replacement\130340E-7.1.dwg 7/31/2014 9:19 AM James Ajok

STRUCTURAL NOTES

1. GENERAL

A. CONSTRUCTION SHALL BE IN CONFORMANCE WITH THE 2013 EDITION OF THE CALIFORNIA BUILDING CODE.

B. THESE NOTES APPLY TO ALL DRAWINGS AND GOVERN UNLESS OTHERWISE NOTED OR SPECIFIED.

C. VERIFY ALL EXISTING CONDITIONS AND PROPOSED DIMENSIONS AT JOB SITE. COMPARE STRUCTURAL DRAWINGS WITH ARCHITECTURAL, MECHANICAL AND ELECTRICAL DRAWINGS BEFORE COMMENCING WORK. NOTIFY ARCHITECT OF ANY DISCREPANCIES AND DO NOT PROCEED WITH AFFECTED WORK UNTIL THEY ARE RESOLVED. DO NOT SCALE DRAWINGS.

D. UNLESS OTHERWISE SHOWN OR NOTED, ALL TYPICAL DETAILS SHALL BE USED WHERE APPLICABLE.

E. ALL DETAILS SHALL BE CONSIDERED TYPICAL AT SIMILAR CONDITIONS.

F. THREE (3) SETS OF SHOP DRAWINGS SHALL BE SUBMITTED TO AND APPROVED BY THE ENGINEER BEFORE FABRICATION, FOR THE FOLLOWING ITEMS:
1. STRUCTURAL STEEL

G. SAFETY MEASURES: AT ALL TIMES THE CONTRACTOR SHALL BE SOLELY AND COMPLETELY RESPONSIBLE FOR THE CONDITIONS OF THE JOB SITE INCLUDING SAFETY OF THE PERSONS AND PROPERTY, PROVIDING NECESSARY SHORING AND BRACING, AND FOR ALL NECESSARY INDEPENDENT ENGINEERING REVIEWS OF THESE CONDITIONS. THE ENGINEER'S JOB SITE REVIEW IS NOT INTENDED TO INCLUDE REVIEW OF THE ADEQUACY OF THE CONTRACTOR'S SAFETY MEASURES.

H. CONTRACTOR SHALL BRING OMISSIONS OR DISCREPANCIES BETWEEN THE CONTRACT DOCUMENTS TO THE STRUCTURAL ENGINEER'S ATTENTION PRIOR TO PROCEEDING WITH THE WORK.

2. TESTS & INSPECTIONS

A. PROVIDE TESTS AND SPECIAL INSPECTIONS FOR ALL ITEMS AS REQUIRED BY THE CALIFORNIA BUILDING CODE 2013 EDITION SECTIONS 1704, 1707 AND 1708.

B. THE OWNER (NOT THE CONTRACTOR) SHALL BE RESPONSIBLE FOR RETAINING AN INDEPENDENT TESTING LAB TO PERFORM ALL REQUIRED TESTING AND SPECIAL INSPECTIONS. A COPY OF ALL INSPECTION REPORTS SHALL BE SUBMITTED TO THE ENGINEER.

C. THE FOLLOWING SPECIFIC ITEMS SHALL BE INSPECTED AND/OR TESTED BY THE TESTING LAB IN ACCORDANCE WITH SECTION 1704, 1707, AND 1708 OF THE 2013 CALIFORNIA BUILDING CODE.
1. WELDING
2. EXPANSION ANCHORS – PERIODIC INSPECTION OF 25% OF ALL ANCHORS WITH A MINIMUM 25% OF ALTERNATING ANCHORS WITHIN A GROUP.

THE CONTRACTOR IS RESPONSIBLE FOR COORDINATING ALL INSPECTIONS AND ENSURING THAT ALL REQUIRED TESTING & INSPECTION IS PERFORMED TO THE SATISFACTION OF THE INSPECTOR.

**THE CONTRACTOR SHALL NOTIFY THE ENGINEER A MINIMUM OF 3 WORKING DAYS PRIOR TO TIME OF INSPECTION.

3. DESIGN BASIS – EQUIPMENT AND NON-STRUCTURAL COMPONENTS

A. CONSTRUCT IN CONFORMANCE WITH THE 2013 EDITION OF THE CALIFORNIA BUILDING CODE AND ALL APPLICABLE LOCAL ORDINANCES.

B. SEISMIC DESIGN DATA FOR EQUIPMENT AND NON-STRUCUTRAL COMPONENTS:
SITE COORDINATES: LATITUDE – 37° 43' 41"N LONGITUDE – 122° 9' 33"W
SEISMIC IMPORTANCE FACTOR Ip = 1.5
MAPPED SPECTRAL RESPONSE ACCELERATION Ss = 2.190 S1 = 0.905
SITE CLASS: ASSUMED D
SPECTRAL RESPONSE COEFFICIENTS: Sds = 1.460 Sd1 = 0.905
SEISMIC DESIGN CATEGORY: E

UNIT	Ap	Rp	OMEGA	z/h	Fp
WC FRAME	1.0	2.5	2.5	0.66	0.81 Wp
SUPPLY/ RETURN FAN	2.5	2.0	2.5	0.66	2.53 Wp

4. STRUCTURAL & MISCELLANEOUS STEEL

A. STEEL SHAPES AND MISCELLANEOUS STEEL SHALL UNIFORM TO THE FOLLOWING:
1. WIDE FLANGES – ASTM A992, GR.50
2. MISCELLANEOUS SHAPES (I.E. CHANNELS, ANGLES, ETC) – ASTM A36
3. STANDARD, EXTRA STRONG, AND DOUBLE EXTRA STRONG PIPE ASTM A53 GR.B
4. HOLLOW STRUCTURAL SECTIONS (HSS)
   * SQUARE OR RECTANGULAR – ASTM A500 GR.B (Fy = 46 ksi)
   * ROUND – ASTM A500 GR.B (Fy = 42 ksi)
5. PLATES, BARS – ASTM A36
   * EXCEPT AS IN MOMENT FRAME CONNECTIONS (CONTINUITY, DOUBLER, ETC) WHICH SHALL BE ASTM A572 GR.50

B. ALL BOLTS SHALL CONFORM WITH ASTM A307 EXCEPT FOR STEEL-TO-STEEL CONNECTIONS WHICH SHALL CONFORM WITH ASTM A325 N. ANCHOR BOLTS (AB) SHALL CONFORM WITH ASTM F1554 GR. 36, U.O.N. HIGH STRENGTH ANCHOR BOLTS (HASB) SHALL CONFORM TO ASTM A354 GR. BD.

C. ALL WORK SHALL BE PERFORMED IN ACCORDANCE WITH THE LATEST EDITION OF AISC SPECIFICATIONS FOR DESIGN, FABRICATION AND ERECTION OF STRUCTURAL STEEL FOR BUILDINGS.

D. WELDING SHALL CONFORM WITH THE LATEST EDITION OF THE AWS SPECIFICATIONS. USE E70XX ELECTRODES.

E. ALL STEEL INCLUDING BOLTS, NUTS, SCREWS, ETC. SHALL BE GALVANIZED. USE GALVALOG PAINT OVER EXPOSED WELDS OR OTHER UN-PROTECTED MARKINGS INCURRED DURING THE TRANSPORTATION, HANDLING, OR ERECTION PROCESS.

F. BOLT HOLES FOR MACHINE BOLTS SHALL BE NO MORE THAN 1/16" OVERSIZED U.O.N.

5. EXPANSION ANCHORS

A. MECHANICAL ANCHORS SHALL BE HILTI KWIK BOLTS TZ (ICC ESR 1917)

B. ALL ANCHORS EXPOSED TO WEATHER, EXCESSIVE MOISTURE OR CORROSIVE ENVIRONMENTS SHALL BE STAINLESS STEEL.

C. ANCHORS SHALL BE INSTALLED IN ACCORDANCE WITH MANUFACTURER'S INSTRUCTIONS AND ICC ESR-1917.

D. DRILL HOLES ON CONCRETE USING CARBIDE-TIPPED DRILL BITS CONFORMING TO ANSI B212.15.

E. DRILLED HOLES MUST BE CLEANED WITH ALL DUST & DEBRIS REMOVED USING PRESSURIZED AIR.

F. NUT & WASHER MUST BE TIGHTENED AGAINST THE BASE MATERIAL UNTIL THE APPROPRIATE INSTALLATION TORQUE SPECIFIED BY MANUFACTURER IS ACHIEVED.

G. PROVIDE SPECIAL INSPECTION FOR INSTALLATION AND PROOF LOADING IN ACCORDANCE WITH THE CITY AND CONTRACTOR.

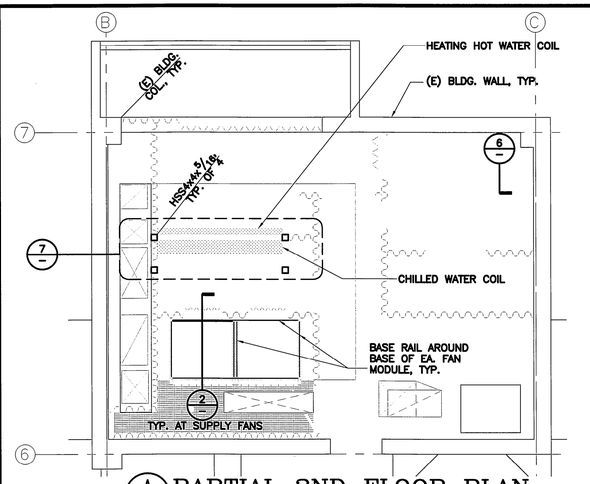

A/– PARTIAL 2ND FLOOR PLAN
SCALE: 1/4"=1'-0"

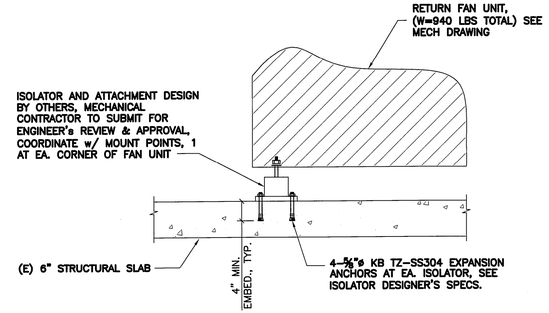

6/– RETURN FAN ANCHORAGE
SCALE: NO SCALE

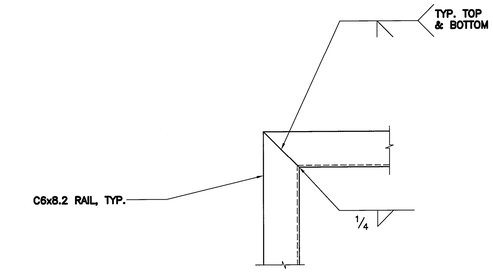

TYPICAL BASE RAIL CONNECTION AT CORNERS

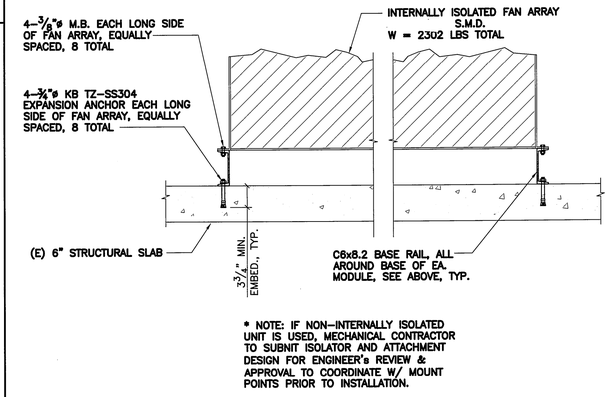

* NOTE: IF NON-INTERNALLY ISOLATED UNIT IS USED, MECHANICAL CONTRACTOR TO SUBNIT ISOLATOR AND ATTACHMENT DESIGN FOR ENGINEER's REVIEW & APPROVAL TO COORDINATE W/ MOUNT POINTS PRIOR TO INSTALLATION.

2/– SUPPLY FAN ANCHORAGE
SCALE: NO SCALE

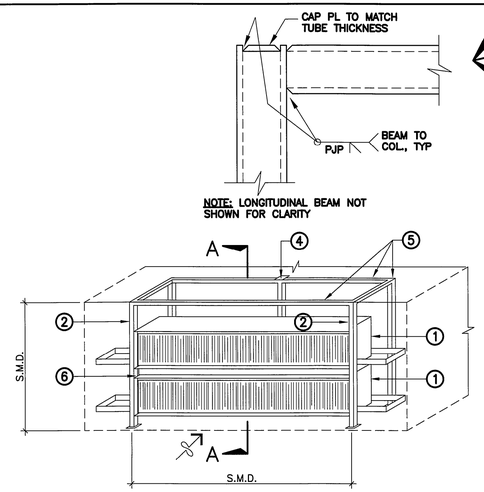

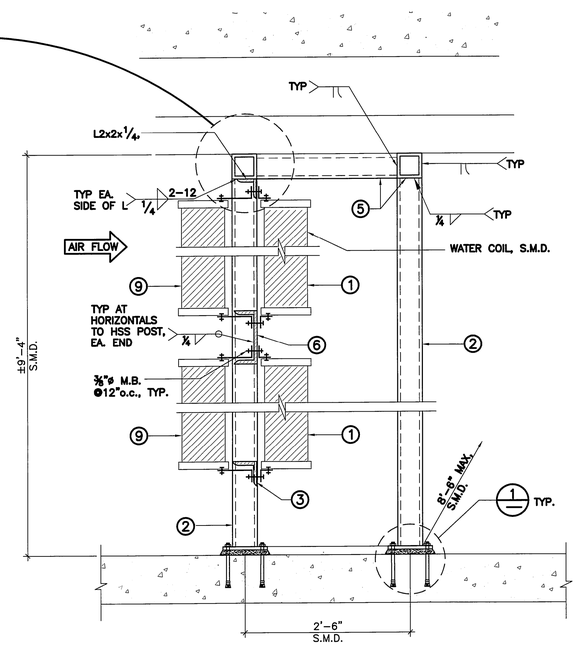

SECTION A-A

DETAIL REFERENCE NOTES:

1. CHILLED WATER COIL TYP. OF 2, W = 485 LBS EACH (970 LBS TOTAL) PER SHEET 11, DETAIL 1/M5.1
2. HSS 4x4x5/16, TYP. AT EACH CORNER
3. L4x4x5/16
4. L2x2x1/4", OR 1 5/8"x1 5/8"x12 GA FRAMING STRUT TO SUPPORT THE BACK SIDES OF THE DRAIN PANS. PER SHEET 11, DETAIL 1/M5.1, INSTALL AT 5 FEET ON CENTER MAXIMUM.
5. HSS 4x4x5/16 TUBE STEEL FRAME TO BOTTOM OF PLENUM CEILING.
6. C8x13.7
7. ALL STEEL MEMBERS TO BE HOT DIPPED GALVANIZED
8. ALL COIL MOUNTING HARDWARE SHALL BE STAINLESS STEEL.
9. NEW HEATING HOT WATER COIL, TYP. OF 2, W = 129 LBS EACH (258 LBS TOTAL) PER SHEET 11, DETAIL 1/M5.1

7/– WATER COIL MOUNTING DETAIL
SCALE: NO SCALE

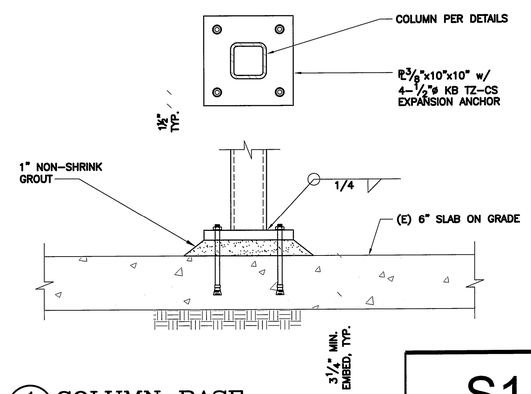

1/– COLUMN BASE
SCALE: NO SCALE

S1

JYASF STRUCTURAL ENGINEERS
JOHN YADEGAR & ASSOCIATES
90 NEW MONTGOMERY #412
SAN FRANCISCO, CA 94105
415.243.0858 | JYASF.COM

REGISTERED PROFESSIONAL ENGINEER MATTHEW B. TROPP No.5683 Exp. 12-31-2015 STRUCTURAL STATE OF CALIFORNIA

SALASO'BRIEN expect a difference

CITY OF SAN LEANDRO INCORPORATED 1872

BEFORE YOU DIG, CALL UNDERGROUND SERVICE ALERT 811
IT SHALL BE THE CONTRACTOR'S RESPONSIBILITY TO DETERMINE THE EXISTENCE AND LOCATION OF ALL UNDERGROUND UTILITIES. THOSE SHOWN REPRESENT THE BEST INFORMATION AVAILABLE TO THE CITY OF SAN LEANDRO AT THE TIME OF PREPARATION OF THESE PLANS. NO GUARANTEE IS MADE AS TO THE ACCURACY OF THIS INFORMATION.

NO.	DATE	REVISION
	05/20/14	PERMIT
	07/30/14	PERMIT

CITY OF SAN LEANDRO

DESIGNED BY TM DATE
DRAWN BY JB DATE 04/23/14
PROJECT MGR. MJG DATE 7/31/14
TRANS ADMIN. — DATE —
SENIOR ENGR. DATE 8/1/14
APPROVED BY: DATE 8/14/14
CITY ENGINEER, R.C.E. No. 34870

PUBLIC SAFETY
HVAC EQUIPMENT REPLACEMENT
STRUCTURAL
PARTIAL 2ND FLOOR PLAN

AT FULL SIZE THIS LINE MEASURES 1"
SHEET 23 OF 23
JOB NO. 2013.0290
SCALE AS NOTED
DWG 3851 CASE 901

JYA 13256