City of San Leandro
Civic Center, 835 E. 14th Street
San Leandro, California 94577

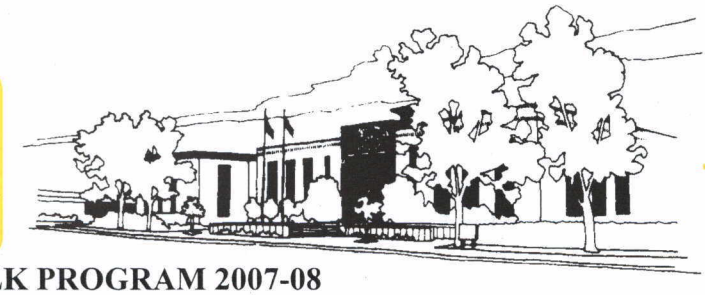

ANNUAL SIDEWALK PROGRAM 2007-08
PROJECT NO. 07-010-31-006
BID NO. 07-08.001

ADDENDUM NO. 1

Date: August 10, 2007

To: All Prospective Bidders

The additions and/or deletions contained in this Addendum shall be made a part of the plans and specifications and contract documents for the above described project, and shall be subject to all applicable requirements thereunder, as if originally shown and/or specified. In case of any conflict between the drawings, specifications, and this addendum, this addendum shall govern.

THE FOLLOWING REVISONS SHALL BE INCORPORATED INTO CONTRACT BOOK & PLANS AS FOLLOWS:

1. **Revised Contract Price Schedule:** The attached "Revised Contract Price Schedule" supersedes the "Contract Price Schedule" included in the bid documents. Contractor must submit the enclosed pink copy of the "Revised Contract Price Schedule" as part of the proposal, in lieu of the blue copy of the "Contract Price Schedule", to the City.

2. **The following modifications are made to the specifications:**

   a. Page 12 and 13 of the contract book (contract price schedule of the proposal) are replaced with the attached sheets. Contractor's attention is directed to bid items 1, 3, 4, and 5.

   b. Page 29 and 30 of the contract book (contract price schedule of the agreement) are replaced with the attached sheets. Contractor's attention is directed to bid items 1, 3, 4, and 5.

   c. The first paragraph of the additions to Section 303-5.9, Measurement and Payment, is replaced with the following text:

   Curbs shall be measured linearly along the top at the face. Curb and gutter shall be measured linearly at the flow line. Walks, driveways, and access ramps shall be measured linearly along the centerline and multiplied by the width, unpaved areas for boxes, planting, vaults, etcetera shall be deducted. The width measured for driveways and access ramps shall be from the back of walk to the score line aligned with the back of curb. Valley gutters shall be measured as required to calculate the plane horizontal surface area.

   Drawings 106A, 106B, and 106C are re-issued as revision 3 dated 8/9/07.

Tony Santos, Mayor

City Council: Surlene G. Grant; Michael J. Gregory; Jim Prola; Diana M. Souza; Joyce R. Starosciak; Bill Stephens

August 10, 2007

PLEASE NOTE: BID OPENING HAS NOT BEEN CHANGED AND WILL BE AT 3:00 P.M., WEDNESDAY, AUGUST 15, 2007

Acknowledge this addendum in your Proposal. If you have any questions, please call the Project Manager, Nick Thom, Associate Engineer, at (510) 577-3431.

Very truly yours,

Kenneth Joseph, P.E., City Engineer
Engineering and Transportation Department

KJ:NT:km

cc: Internal Plans & Specs Distribution List
COSL Current Plan-holders and Pre-bid Meeting Attendees

ACKNOWLEDGEMENT

I hereby acknowledge receipt of this Addendum for the above noted project.

_____ **Date:**_____
(Signature)

_____
(Business Name – Please Print)

CONTRACT PRICE SCHEDULE

This Page Issued as Addendum 1

Item No.	Description	Est. Quant. (A)	Unit of Meas.	Item UNIT Price (in Words)	Item UNIT Price (in Figures) (B)	TOTAL PRICE (in Figures) (AxB)
1.	Install curb and gutter per drawing 100 case 3101	1000	LF			
2.	Install sidewalk per drawing 100 case 3101	5,700	SF			
3.	Install 6" driveway per drawing 102 or drawing 110 case 3101	1,350	SF			
4.	Install 8" driveway per drawing 102 or drawing 110 case 3101	1,300	SF			
5.	Install wheelchair curb cut ramp per drawing 106A and B case 3101	2,300	SF			
6.	Install depressed driveway approach per drawing 108 case 3101	180	SF			
7.	Install basket weave sidewalk per drawing 112 case 3101	300	SF			
8.	Install valley gutter per drawing 114 case 3101	240	SF			
9.	Install stamped concrete paving per drawing 116 case 3101	100	SF			
10.	Install tack on curb per drawing 118 case 3101	50	LF			
11.	Install vertical curb per drawing 118 case 3101	50	LF			
12.	Install cast iron pipe curb drain per drawing 212 case 3101	30	LF			
13.	Remove and reset pavers at existing tree per drawing 436 case 3101	100	SF			
14.	Install retrofit frame for tree grate in existing concrete per drawing 438A and B case 3101	14	EA			

This Page Issued as Addendum 1

Item No.	Description	Est. Quant. (A)	Unit of Meas.	Item UNIT Price (in Words)	Item UNIT Price (in Figures) (B)	TOTAL PRICE (in Figures) (AxB)
15.	Install cast in place frame for tree grate per drawing 438A and B case 3101	13	EA	_____ _____		
16.	Install cast iron tree grate per drawing 438A and B case 3101	14	EA	_____ _____		
17.	Remove 4" Concrete and backfill with topsoil	500	SF	_____ _____		
18.	Provide traffic control plan and implement traffic control per section 7-10.3.3 and 7-10.3.4	2	STREETS	_____ _____ _____		
19.	Remove existing pavers, trim roots, and install decomposed granite at existing tree well	14	EA	_____ _____		
20.	Install decomposed granite at empty tree well	14	EA	_____ _____		

NOTE: Bid items 1-16 include removal of existing concrete (where required) as described in section 300-1.

TOTAL BID: _____
(In Words)

TOTAL BID: _____
(In Figures)

UNITS OF MEASURE:

Abbreviation	Word or Words
LF	Linear Feet
SF	Square Feet
SY	Square Yards
CY	Cubic Yards
TN	Tons (2,000 lbs./907.2 kgs.)
LS	Lump Sum
EA	Each
MO	Months

NOTE: The estimate of construction quantities set forth herein is approximate only, being given as a basis for the comparison of bids. The City does not expressly nor by implication agree that the actual amount of work will correspond therewith, and reserves the right to change the amount of any class or

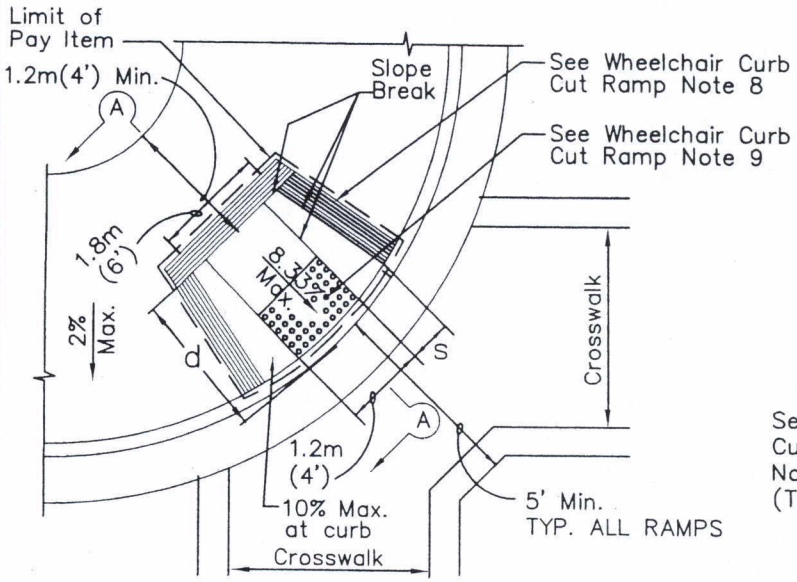

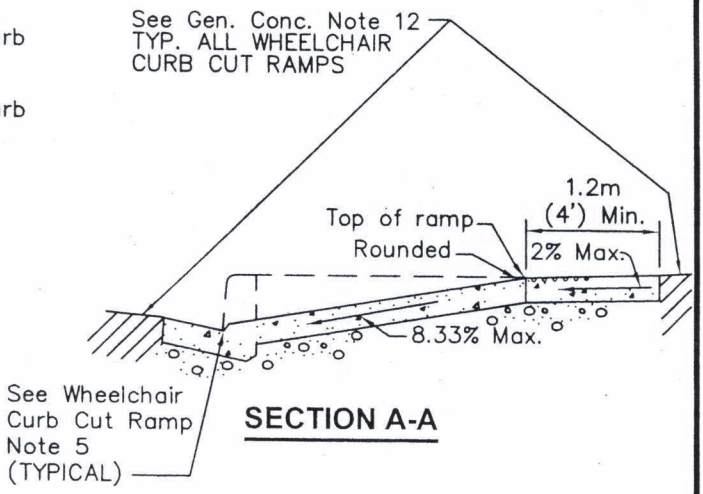

SECTION A-A

TYPE A

(When sidewalk is narrow, Type B, C or D shall apply)

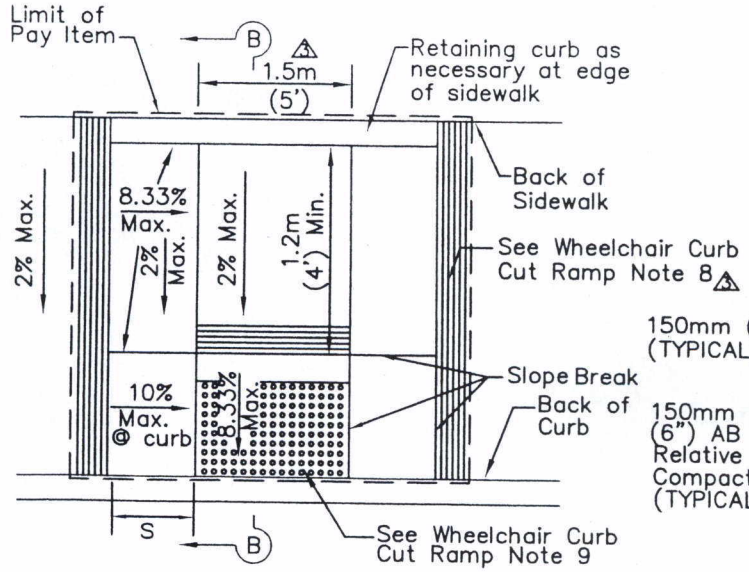

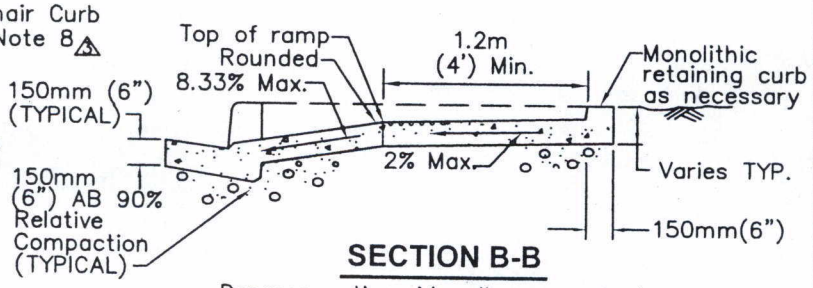

SECTION B-B

Depress entire sidewalk as required

TYPE B

NOTE: SEE WHEELCHAIR CURB CUT RAMP AND DETECTABLE WARNING SURFACE NOTES DWG. 106C & 106D CASE 3101

ACAD FILE NO. C3101D106A Rev3.DWG

CITY OF SAN LEANDRO * STANDARD PLANS

NO.	REVISIONS	DATE	BY
1	REV. DETECTABLE WARNING SURFACE	6/28/04	
2	REV. DETECTABLE WARNING SURFACE NOTES	7/1/05	
3	REV. DIM & WHEELCHAIR CURB CUT	8/9/07	AMS

WHEELCHAIR CURB CUT RAMP TYPE A & B

APPROVED Kenneth Joseph, City Engineer R.C.E. No.34870 Expires 9/30/07

DRAWN	CHECKED	DATE	SCALE	SHEET	DWG. NO.	CASE.
GF/MLWH/VL	KJ/KRC	June 2004	NONE	1 OF 4	106A	3101

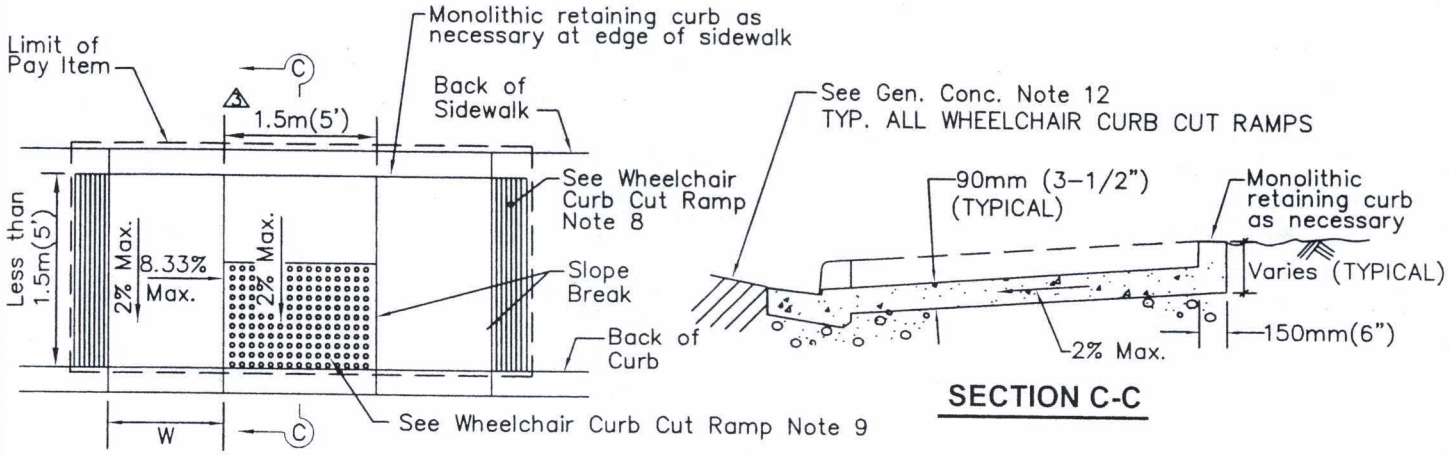

TYPE C

Use when sidewalk is less than 1.5m(5') wide or as applicable

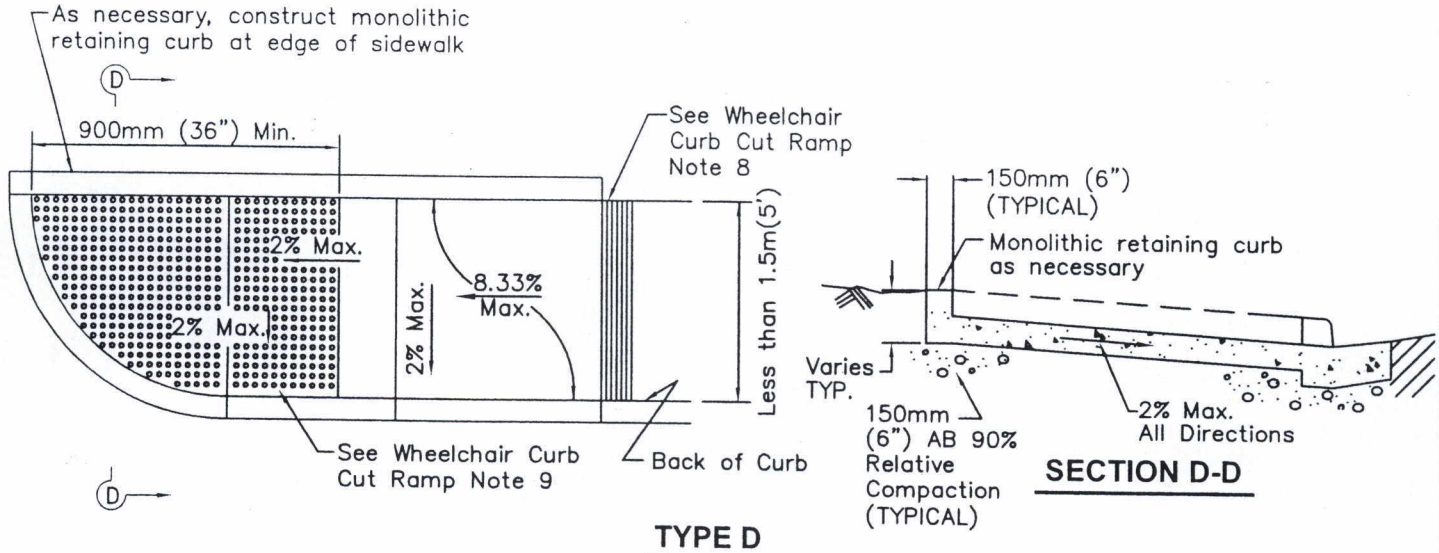

TYPE D

Use when sidewalk is less than 1.5m(5') wide or as applicable

Requires custom manufactured Dectectable Warning Surface tile for cast in place applications, verify field measurements prior to manufacture. Surface application requires prior Engineer approval.

NOTE: SEE WHEELCHAIR CURB CUT RAMP AND DETECTABLE WARNING SURFACE NOTES DWG. 106C & 106D CASE 3101

ACAD FILE NO. C3101D106B Rev3.DWG

CITY OF SAN LEANDRO * STANDARD PLANS

NO.	REVISIONS	DATE	BY
1	REV. DETECTABLE WARNING SURFACE	6/28/04	
2	REV. DETECTABLE WARNING SURFACE NOTES	7/1/05	
3	REV. DIM & WHEELCHAIR CURB CUT	8/9/07	AMS

WHEELCHAIR CURB CUT RAMP TYPE C & D

APPROVED
Kenneth Joseph, City Engineer R.C.E. No.34870
Expires 9/30/07

DRAWN	CHECKED	DATE	SCALE	SHEET	DWG. NO.	CASE
GF/MLWH/VL	KJ/KRC	June 2004	NONE	2 OF 4	106B	3101

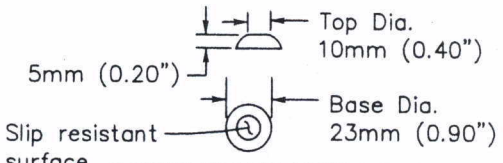

RAISED TRUNCATED DOME

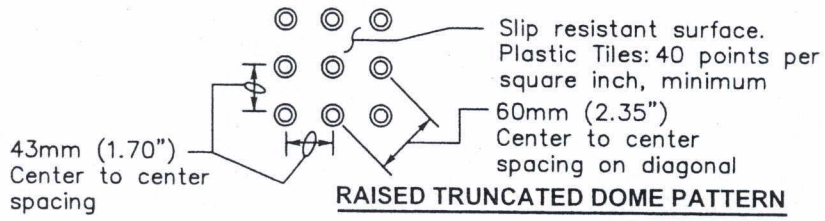

RAISED TRUNCATED DOME PATTERN

15. TRUNCATED DOMES – PLASTIC TILES: Tiles shall be "Armor Tile" as manufactured by Engineered Plastics Inc., Tel: (800)–682–2525, or approved equal. Tiles shall be a single tile, full width x 900mm (36") deep nominal, manufactured of an epoxy polymer composite with an ultraviolet stabilized, colorfast coating employing aluminum oxide particles in the truncated cones. Color shall be Safety Yellow (Federal Color #33538). The tile shall incorporate an in–line pattern of truncated domes; 5mm (0.20") in height, 23mm (0.90") diameter at the base, and 10mm (0.40") diameter at the top of dome, spaced 60mm (2.35") nominal as measured on a diagonal and 43mm (1.70") nominal as measured side by side; rows shall be oriented parallel with ramp direction; domes shall be aligned throughout entire detectable surface area. The field area shall consist of a nonslip surface with a minimum of 40–90 raised points .045" high, per square inch. The tile shall be maufactured with embedment flanges, 75mm (3") center to center, 25mm (1") min. depth with 16mm (5/16") diameter holes, 3 holes minimum per flange. Where tiles are cut, sealant shall be worked under the tile along perimeter wherever the embedment flange is removed.

16. TRUNCATED DOMES – CONCRETE: Upon prior approval from Engineer high strength concrete panels reinforced with pre–stressed stainless steel strands may be used. Concrete panels shall be CAST in TACT Warning Panels Tel: (530) 878–2440 or approved equal; two panels max to achieve full width x 900mm (36") deep nominal; 22mm (7/8") thick, 69 MPa (10,000 psi) high strength concrete; 1.59mm (1/16") Type 304 SS pre–stressed reinforcement strands 100mm (4") O.C. each way and along edges; color shall be yellow unless otherwise specified. Installation shall be per manufacturers directions.

17. TRUNCATED DOMES – SURFACE APPLICATION: Upon prior approval from Engineer, retrofit and unique circumstances may allow surface application:

    a. Surface applied detectable tiles shall be "Armor Tile" manufactured without embedment flanges and the edges shall be beveled, sloped at 1:2 maximum. When the detectable surface edge and/or dome is cut and the resulting edge is not flush with the surface of the ramp, the edge shall be beveled or conformed with perimeter sealant at 1:2 maximum slope in accordance with the manufacturer's requirements.

    b. Adhesive: Urethane electrometric adhesive by Sika Corp., Uniroyal, Mapei, Bostik, or approved equal.

    c. Fasteners: Color matched, corrosion resistant, flat head drive anchor: 6.25mm (1/4") diameter x 1–3/4" long, 300mm (12") center to center both directions minimum. Armor–Drive by Engineered Plastics or approved equal.

    d. Perimeter Sealants: Epoxy two component sealant by Powers, Simpson, Hilti or approved equal. Aluminum grey color.

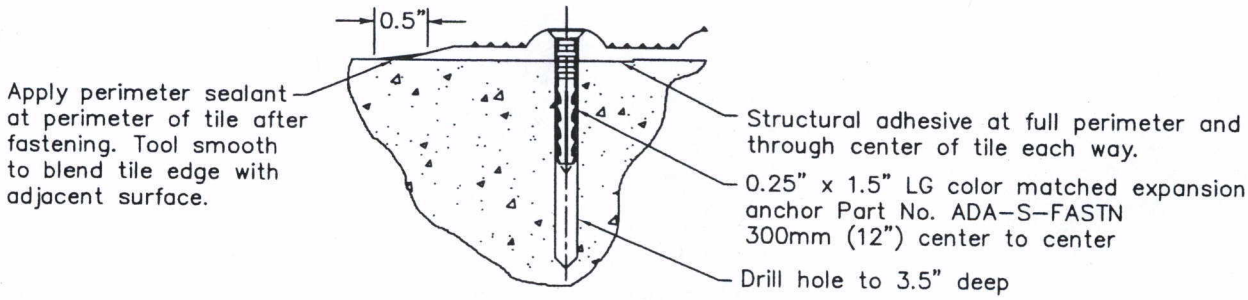

SURFACE APPLIED TILE INSTALLATION DETAIL

ACAD FILE NO. C3101D106D Rev3.DWG

CITY OF SAN LEANDRO * STANDARD PLANS

NO.	REVISIONS	DATE	BY
2	REVISED DETECTABLE WARNING SURFACE NOTES	7/1/05	
3	REV. NOTES 15 & 16	8/9/07	AMS

WHEELCHAIR CURB CUT RAMP DETECTABLE WARNING SURFACE NOTES

APPROVED
Kenneth Joseph, City Engineer R.C.E. No.34870
Expires 9/30/07

DRAWN GF/MLWH/VL	CHECKED KJ/KRC	DATE June 2004	SCALE NONE	SHEET 4 OF 4	DWG. NO. 106D	CASE. 3101