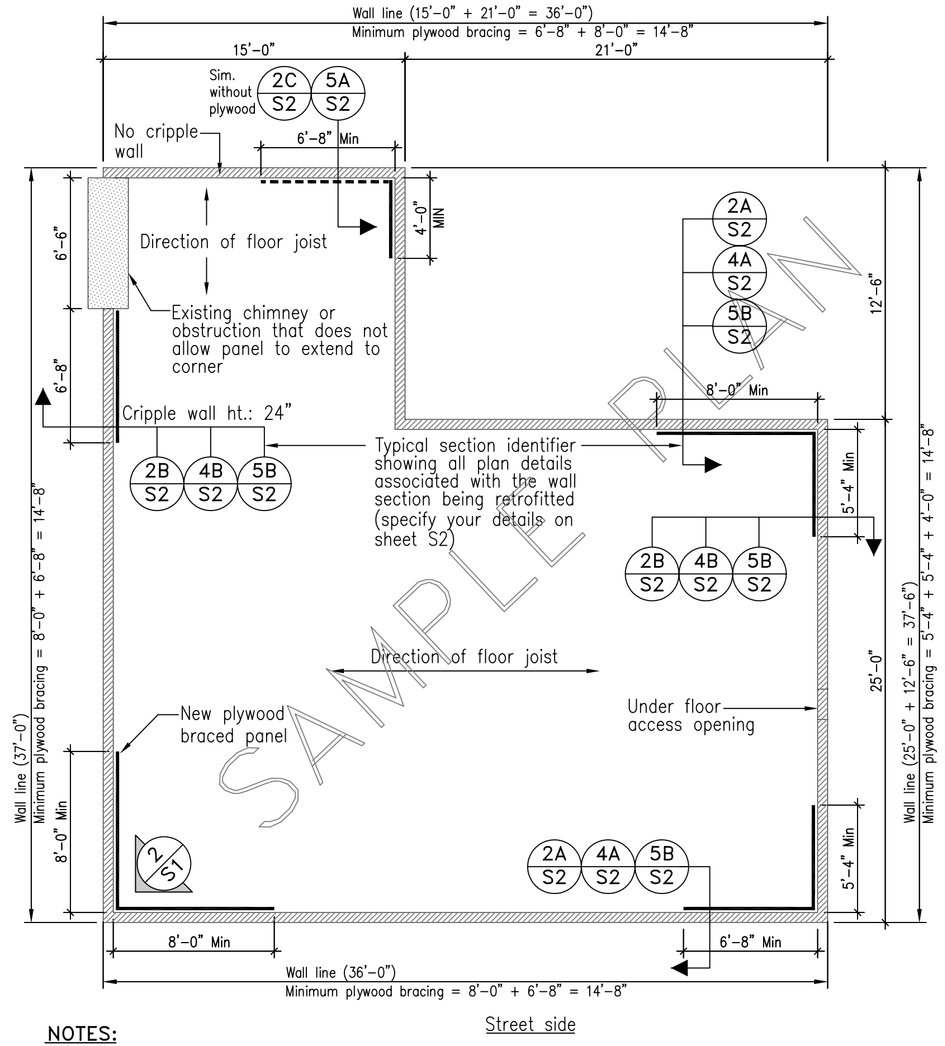

SAMPLE PLAN

NOTES:

1. This is a sample plan of a 1200 SF one story home of "light construction"
2. (2B/S2) homeowner to choose most appropriate detail.

1 SAMPLE FOUNDATION AND PLYWOOD LAYOUT PLAN

SCALE: 3/16"=1'-0"

3 TECHNICAL NOTES

A. GENERAL:

1. All existing concrete and wood material which will be part of the strengthening work shall be in sound condition and free from defects which would substantially reduce the capacity of the material. Any substandard material shall be repaired or replaced to meet minimum building code requirements. New foundations shall meet current Building Code requirements.
2. All metal connectors and hardware shall meet an approved standard for its intended use and be installed per manufacturer's instructions, and in accordance with the requirements of these standards. Alternate details may be approved by the building official provided detailed information and calculations are submitted and approved.
3. All existing under floor ventilation shall be maintained.
4. Due to the corrosive nature of new pressure treated wood which can cause premature failure of the metal hardware, fasteners in new pressure treated wood shall be hot dipped galvanized fasteners (meeting ASTM A153) and connectors (ASTM A 653 class G185 sheet), or better.
5. LEGEND:
   (E) = Existing construction; (N) = New construction
   4/S1 = Refer to detail 4 on sheet S1
   NTS = Not to scale ; Min = Minimum
   FFC = Floor Framing Clip

B. MUDSILL CONNECTIONS:

1. New bolts or UFP10 anchors required by reinforcement schedule 4/S1 shall be installed within plywood braced panels. See detail 2/S2.
2. Where an existing continuous rim joist, end joist, or solid blocking between joists, does not exist above the perimeter cripple wall or mud sill, new blocking and/or supplemental connections shall be provided and subject to approval by the building official.
3. All new mud sill bolts shall have a 3" X 3" X ¼" plate washer installed between the mud sill (or blocking) and the nut.
4. New bolts shall be 1½" inches minimum from the edges of the mud sill and 6" from the ends.
5. Existing anchor bolts are generally not reliable and should not be considered as meeting the requirements of this plan set.
6. New bolts or anchors within new braced panels shall be placed as follows:
   a) one bolt or anchor at each end of the braced bay
   b) additional bolts or anchors at 32" on center or less.
   c) additional foundation bolts or anchors as required by the schedule detail 4/S1.
7. New mudsill plates shall be pressure-treated douglas-fir or foundation-grade redwood.
8. New steel bolts shall conform to ASTM A307. Adhesive or expansion type anchors shall be installed per manufacturer's instructions. Third party special inspection is not required. Expansion bolts shall not be used when the installation causes cracking of the foundation wall at the location of the bolt. The use of "adhesive type" anchors is strongly encouraged.
9. Provide new mudsill bolts or anchors outside of braced panels at 6'-0" on center or less.

C. FLOOR TO CRIPPLE WALL / MUDSILL CONNECTION:

1. See "Reinforcement Schedule" 4/S1 and detail 5/S2 for required connection.
2. Increase length of nails ½" when attaching floor framing clips through plywood.
3. If splices in double top plates do not have a minimum 48" lap, provide a new minimum 4' strap. See detail 6A/S2.
4. Existing single top plates shall reinforced with a 16ga x 48" metal strap. See detail 6B/S2.
5. Where plate straps occur within a braced panel, the strap shall be placed over the plywood and the plywood nails omitted where the strap is installed.

D. PLYWOOD BRACED PANEL INSTALLATION:

1. See 4/S1 "Reinforcement Schedule" for the required length of new plywood panel bracing along each wall line. See "Sample Foundation Plan" for the definition of a "wall line" and an example of plywood panel layout.
2. Install plywood braced panels at each end of each wall line and space additional panels, as needed, along each wall line.
3. Plywood braced panels closest to the ends of wall lines shall be located as near to the ends as possible. Panels may be located away from the ends of a wall line when existing obstructions or limited clearance necessitates such relocation.
4. Plywood braced panels should be nearly equal in length and should be nearly equal in spacing along the length of the wall where possible.
5. The length of each individual panel must be twice the height of the cripple wall being braced, but never less than 48 inches in length.
6. The perimeter of all new plywood braced panel shall be nailed to existing cripple wall studs, top plate(s) and the mudsill at 4" on center. Attach plywood to intermediate cripple wall studs at a maximum of 12" on center.
7. Nails shall be 8d common x 2½" long with a minimum shank diameter of .131 inches (.131 x 2½"). .131 x 2⅛" nails may be used for installations using nail guns.
8. Plywood braced panel shall be 5-PLY, 15/32" exterior grade (3-PLY 15/32" is not acceptable).
9. Maintain a minimum edge distance ⅜", from center of nail to any plywood edge.
10. Do not overdrive, countersink, or otherwise damage the "outermost ply" when installing nails.
11. Do not space nails closer than 3½" in plywood braced panels.
12. Nails must be firmly embedded in framing behind plywood without causing splitting. See detail 4A/S2 for double stud at plywood joints.

E. PERMIT & INSPECTION REQUIREMENTS:

1. Submit a permit application and 2 completed plan sets to the Building Dept. for review (photographs of the mud sill, cripple wall, and floor framing conditions may assist the review process).
2. Before starting work the permit holder may be required to schedule a pre-construction inspection with the building department to verify that field conditions are consistent with the information provided on the approved plan.
3. Inspections by the building department are required for:
   a) foundation bolt/anchor plate installation,
   b) installation of blocking,
   c) plywood braced panel installation on cripple wall,
   d) metal hardware installation, and
   e) final inspection.
4. No work requiring inspection shall be covered until it has been inspected and approved by the Building Department.
5. Prior to final inspection, smoke detectors shall be installed in the attached dwelling(s) in accordance with building code requirements.

GENERAL INSTRUCTIONS

READ FIRST:

To determine if your home qualifies please answer the following quetions. If you answer yes to all of the following questions your home qualifies to use this standard.

IF YOU ANSWER YES TO EACH OF THESE QUESTIONS, PROCEED TO APPLICANT INSTRUCTIONS.

DOES THIS PLAN SET APPLY TO YOUR HOME?	YES	NO
1. Is your home a one or two family residential structure?	☐	☐
2. Is your home two stories or less?	☐	☐
3. Is your home wood-framed construction?	☐	☐
4. Does the building have a continuous perimeter concrete foundation (ignoring the immediate area surrounding the fireplace? porches?)	☐	☐
5. Does your house have a crawl space?	☐	☐
6. Are all the cripple walls less than 4 feet in height? (See detail 2/S1 in lower left corner of plan set for an example of a cripple wall)	☐	☐
7. If your home has brick or stone veneer along the exterior walls (excluding any chimneys), is the maximum height of the veneer 4 feet above the foundation? (If your home does not have any brick or stone veneer, you should answer this question as a YES.)	☐	☐
8. If the roofing of your home is clay tile , are the tiles installed without the use of mortar along the tile edges. (If your home's roofing is a material other than clay tile you should answer this question as a YES.)	☐	☐

IF YOU ANSWER NO TO ANY OF THESE QUESTIONS CONTACT YOUR LOCAL BUILDING DEPARTMENT FOR ASSISTANCE.

APPLICANT INFORMATION

APPLICANT: _____

ADDRESS: _____

TELEPHONE: _____

PROPERTY ADDRESS: _____

OWNER: _____

APPLICANT'S SIGNATURE

PURPOSE:

1. These plan set standards for strengthening may be approved by the building official without requiring additional plans or calculations. They provide an economical method to help improve your home's chances of surviving an earthquake.
2. The intent of these standards is to promote public safety and welfare by reducing the risk of earthquake damage to existing wood-framed residential buildings.
3. The requirements contained herein are prescriptive minimum standards intended to improve the seismic performance of residential buildings. They will not necessarily prevent earthquake damage, nor make your home earthquake proof. These recommendations are based on assumptions that apply to houses of average construction. You are encouraged to have a competent licensed engineer or architect review the plans & modify them as appropriate for your home.
4. The prescriptive details and provisions are not intended to be the only acceptable strengthening methods permitted (alternate details and methods may be used when approved by the building official).
5. When the building official determines that conditions exist that are beyond the scope of these prescriptive standards, analysis and documentation shall be prepared by a California licensed architect or engineer.
6. This prescriptive plan addresses only seismic strengthening work. Alternative designs will be considered on a case-by-case basis. Work done under permit pursuant to this prescriptive plan does not legalize any previous work done without a permit.

APPLICATION INSTRUCTION:

1. Draw a scaled foundation plan of the house in the graph space provided on sheet S2 (refer to the "sample foundation and plywood layout plan". Detail 1/S1 for guidance).
2. Provide appropriate construction information in the "Construction Data", detail 5/S1. Determine the spacing requirements for the mudsill bolts or anchor plates to be used and identify the type of FFC clip to be used.
3. Based upon the homes square footage, number of stories and type of construction "heavy" or "light", determine the requirements for "plywood bracing, mudsill anchorage" and floor to cripple wall/mudsill connections". Based on the "Reinforcement Schedule". See detail 4/S1.
4. Identify on the "Foundation plan" the direction of run of all your floor joists.
5. Identify on the "foundation plan" (along the perimeter walls) the location of all fireplaces.
6. For each wall segment on the foundation plan indicate the plan details which represent:
   step1: the mud sill anchoring method. See detail 2/S2.
   step2: the floor-to-cripple wall/mudsill attachment. See det. 5/S2.
   step3: the cripple wall bracing method to be used. See detail 4/S2.
7. For each wall segment on the foundation plan indicate the maximum cripple wall height and the length and location of all plywood braced panels to be installed (identify all wall sections that do not have cripple walls).

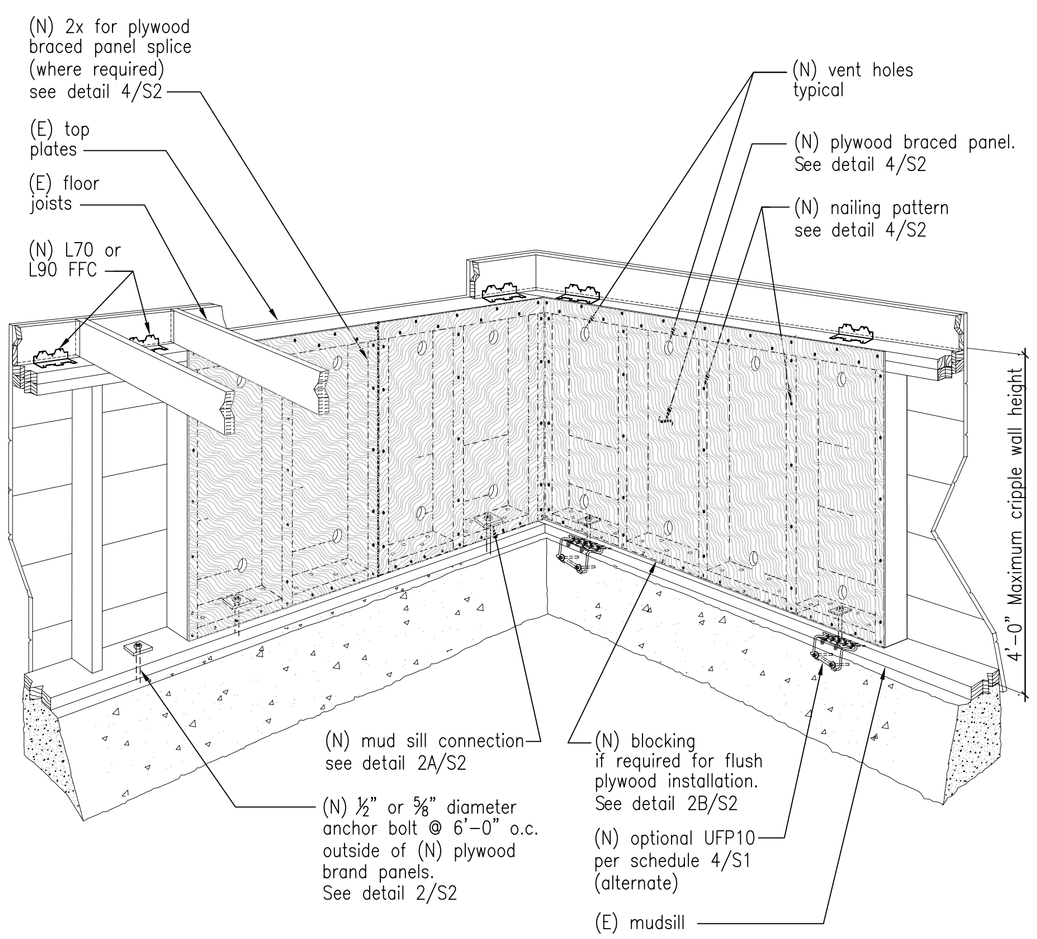

NOTES:

1. This detail shows a sample cripple wall which has undergone a typical seismic retrofit.
2. This detail is not intended to supersede requirements contained in the specific installation details on sheet S2.
3. This isometric is viewed from the interior of the crawl space.

2 TYPICAL CRIPPLE WALL BRACING DETAIL

4 REINFORCEMENT SCHEDULE

REINFORCEMENT SCHEDULE

GENERAL INFORMATION			PLYWOOD BRACING	MUDSILL ANCHORAGE			FLOOR TO CRIPPLE WALL / MUDSILL CONNECTION		
CHECK THE BOX WHICH APPLIES TO YOUR HOME	TOTAL FLOOR AREA (SF) (1)	HEAVY OR LIGHT CONSTRUCTION	MINIMUM TOTAL BRACING LENGTH ALONG EACH WALL LINE	MINIMUM SILL ANCHORS ALONG EACH WALL LINE			MIN. NO. OF FLOOR FRAMING CLIPS (FFC)(3) ALONG EACH WALL LINE (4)		
				UFP10 (2)	1/2"ø BOLT	5/8"ø BOLT	NO. OF L70	NO. OF H10 (5)(6)	NO. OF L90
1-STORY REQUIREMENTS	800	Heavy	16'-0"	5	8	6	13	10	10
	800	Light	12'-0"	4	6	5	11	8	8
	1000	Heavy	17'-4"	6	9	6	15	12	12
	1000	Light	14'-8"	4	7	5	12	9	9
	1200	Heavy	20'	6	9	7	17	13	13
	1200	Light	14'-8"	5	7	5	13	10	10
	1500	Heavy	22'-8"	7	11	8	19	15	15
	1500	Light	17'-4"	5	8	6	15	11	11
	2000	Heavy	28'	8	13	9	24	18	18
	2000	Light	21'-4"	6	10	7	18	14	14
2-STORY REQUIREMENTS	1500	Heavy	17'-4"	5	8	6	15	11	11
	1500	Light	14'-8"	4	7	5	12	9	9
	1800	Heavy	24'-0"	7	12	8	21	16	16
	1800	Light	18'-8"	6	9	7	16	12	12
	2400	Heavy	29'-4"	9	14	10	25	19	19
	2400	Light	22'-8"	7	11	8	20	15	15
	3000	Heavy	N/A	N/A	N/A	N/A	N/A	N/A	N/A
	3000	Light	26'-8"	8	13	9	23	17	17

FOOTNOTES FROM TABLE:

1. See total floor area retrofit Construction Data.
2. When UFP anchors and bolts are used in a single wall line, UFP anchors maybe substituted for the number of bolts.
3. Not more than one angle per joist bay unless joists are spaced 24 inches on center. Where practicable install angles between joists above plywood braced panel locations.
4. Install L70 & L90 W/ 10d x 1½" nails (.148 x 1½").
5. H10 uses (8) 8d (.131" dia.) x 1½" into joist and (8) 8d (.131" dia.) x 1½" into top plates.
6. H10 floor framing clip should be used as an alternate only where accessibility makes the use of L70 or L90 impractical. L70 and L90 clips are preferred over H10 FFC.

DEFINITIONS- "LIGHT" AND "HEAVY" CONSTRUCTION

HEAVY CONSTRUCTION is your home constructed using any of the following:

1. Stucco exterior wall finish
2. Heavy roofing consisting of concrete or clay tiles (Weighing up to 11 pounds per square foot)

NOTE:

Clay tile weighing more than 11 pounds per square foot may be considered on an individual basis. Check w/ your local Building Department.

LIGHT CONSTRUCTION is any building constructed using only the following.

ROOFING MATERIALS:

1. Wood shakes or shingles
2. Composition or asphalt shingles
3. Metal roofing (Weighing 5 pounds per square foot or less)

EXTERIOR WALL FINISHES:

1. Wood panel sheathing
2. Wood board siding
3. Similar light board siding

INTERIOR WALL FINISHES:

1. Gypsum board
2. Gypsum or plaster lath

CONNECTOR CAPACITY (Pounds) and Connection Description

458 lbs.	L70 is 16 ga X 7" long uses (8) – 10d X 1-1/2" nails (.148 x 1 1/2")
600 lbs.	L90 is 16 ga X 9" long uses (10) – 10d X 1-1/2" nails (.148 x 1 1/2")
505 lbs.	H10 anchor uses (8) – 8d X 1-1/2" nails (.131 x 1 1/2")
820 lbs.	1/2" dia. bolt
1170 lbs.	5/8" dia. bolt
1340 lbs.	UFP10– Universal plate anchor

5 CONSTRUCTION DATA

GENERAL HOME INFORMATION:

A. Square footage calculation

1. No. of stories above cripple wall/mud sill: _____
2. Approximate 1st floor area over crawl space: _____ sf
   (Do not include areas above garage slab)
3. Approximate 2nd floor area over crawl space: _____ sf
   (Do not include areas above garage slab)
   Total floor area: _____ sf

B. Is your home of "Light" or "Heavy" construction?

1. See detail 4/S1 for definition of heavy versus light construction

☐ – HEAVY construction ☐ – LIGHT construction

FLOOR FRAMING CONNECTION:

to Mudsill or Top Plate

☐ FRAMING CLIP: _____
Manufacturer _____
Part No. _____
Load Value parallel to cripple wall and/or mud sill _____

MUDSILL ANCHORAGE:

EXISTING

☐ BOLTS: Diameter _____ Spacing _____

NEW

☐ BOLTS: Diameter _____ Spacing _____
Type: ☐ Chemical ☐ Expansion/Mechanical
☐ ANCHOR PLATE: Manufacturer _____
Part No. _____
Bolt Type: ☐ Chemical ☐ Expansion/Mechanical

STANDARD PLAN A (2008) RESIDENTIAL SEISMIC STRENGTHENING PLAN

PRESCRIPTIVE SEISMIC STRENGTHENING PLAN FOR CRIPPLE WALL BRACING AND FOUNDATION SILL PLATE ANCHORAGE OF LIGHT WOOD FRAMED RESIDENTIAL STRUCTURES.

STRUCTURAL ENGINEERS ASSOCIATION NORTHERN CALIFORNIA · ICC PENINSULA CHAPTER · MONTEREY BAY CHAPTER · EAST BAY CHAPTER ICC · California Building Officials · Northern California Chapter · ABAG

S1

1 FOUNDATION PLAN

CHECK SCALE: ONE SQUARE (1/4") = ONE FOOT

Street side

1/4" = 1'

1/3 x 1/4" = 4"

1/4" = 1'

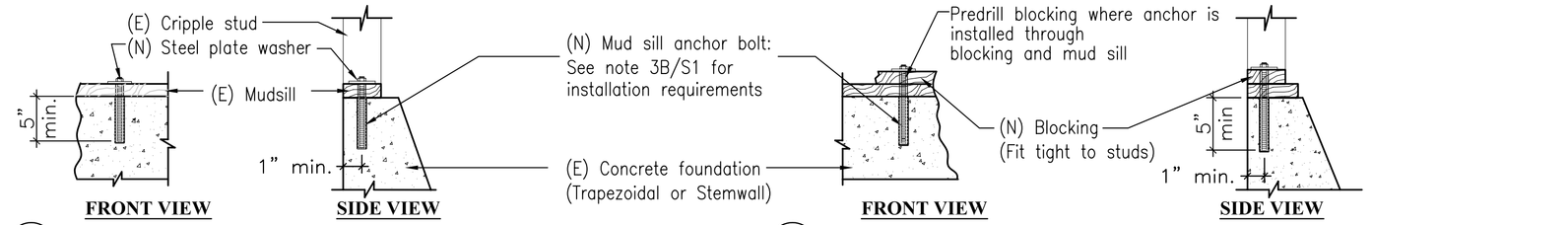

A ANCHOR THROUGH MUDSILL ONLY

B ANCHOR THROUGH BLOCKING AND MUDSILL

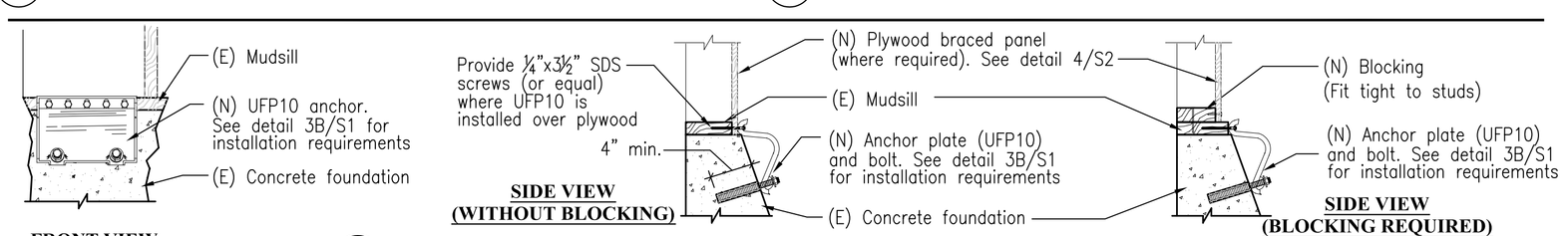

C OPTIONAL ADJUSTABLE ANCHOR PLATE
(FOR USE WHEN THERE IS LIMITED CLEARANCE FOR ANCHOR BOLT INSTALLATION)

2 TYPICAL MUDSILL TO CONCRETE FOUNDATION CONNECTIONS

SCALE: NTS

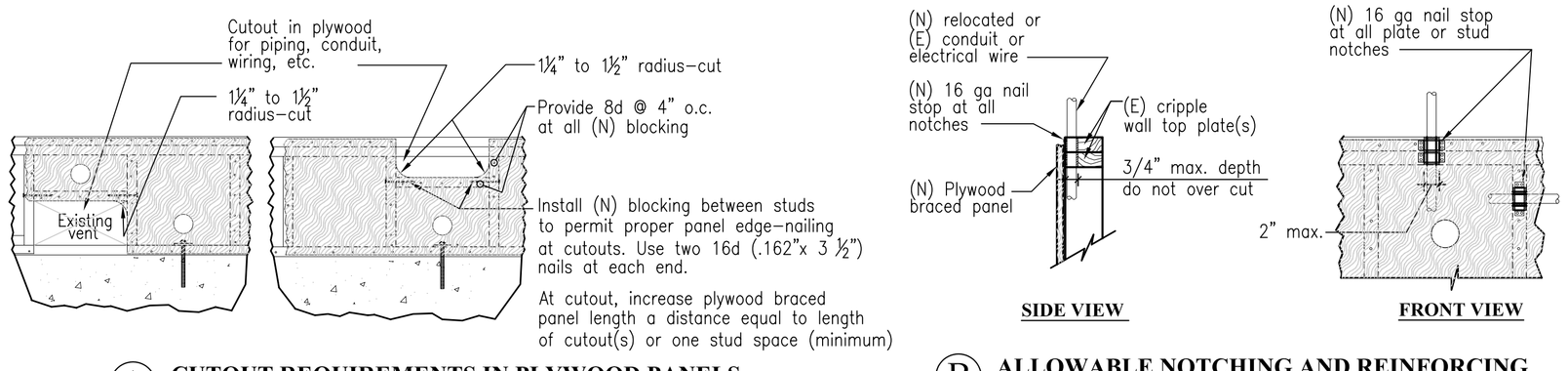

A CUTOUT REQUIREMENTS IN PLYWOOD PANELS

B ALLOWABLE NOTCHING AND REINFORCING FOR TOP PLATES AND STUDS

3 TYPICAL PANEL CUTOUTS & NOTCHING REQUIREMENTS

SCALE: NTS

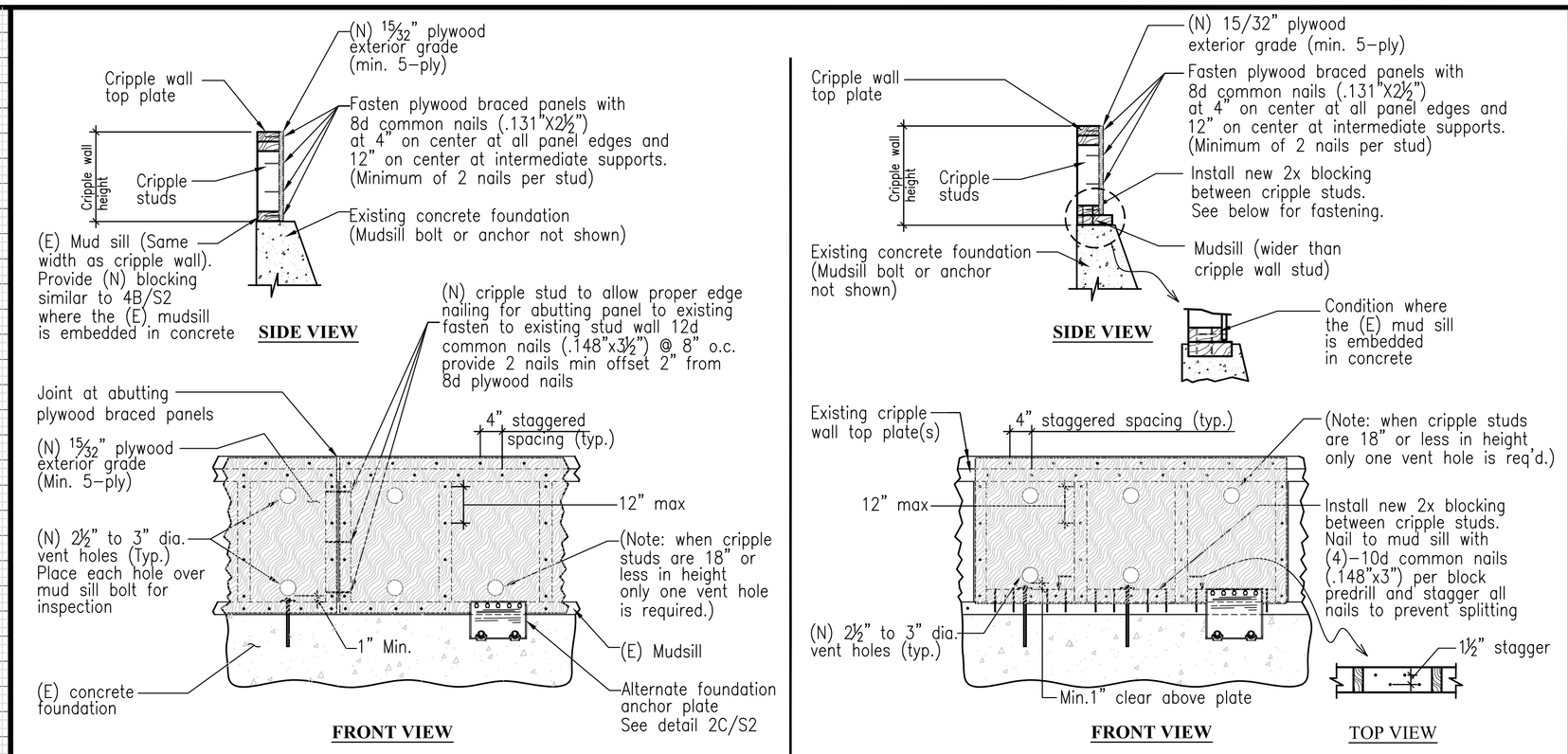

A MUDSILL SAME WIDTH AS CRIPPLE WALL

B MUDSILL WIDER THAN CRIPPLE WALL

4 PLYWOOD BRACED PANEL INSTALLATION DETAIL

SCALE: NTS

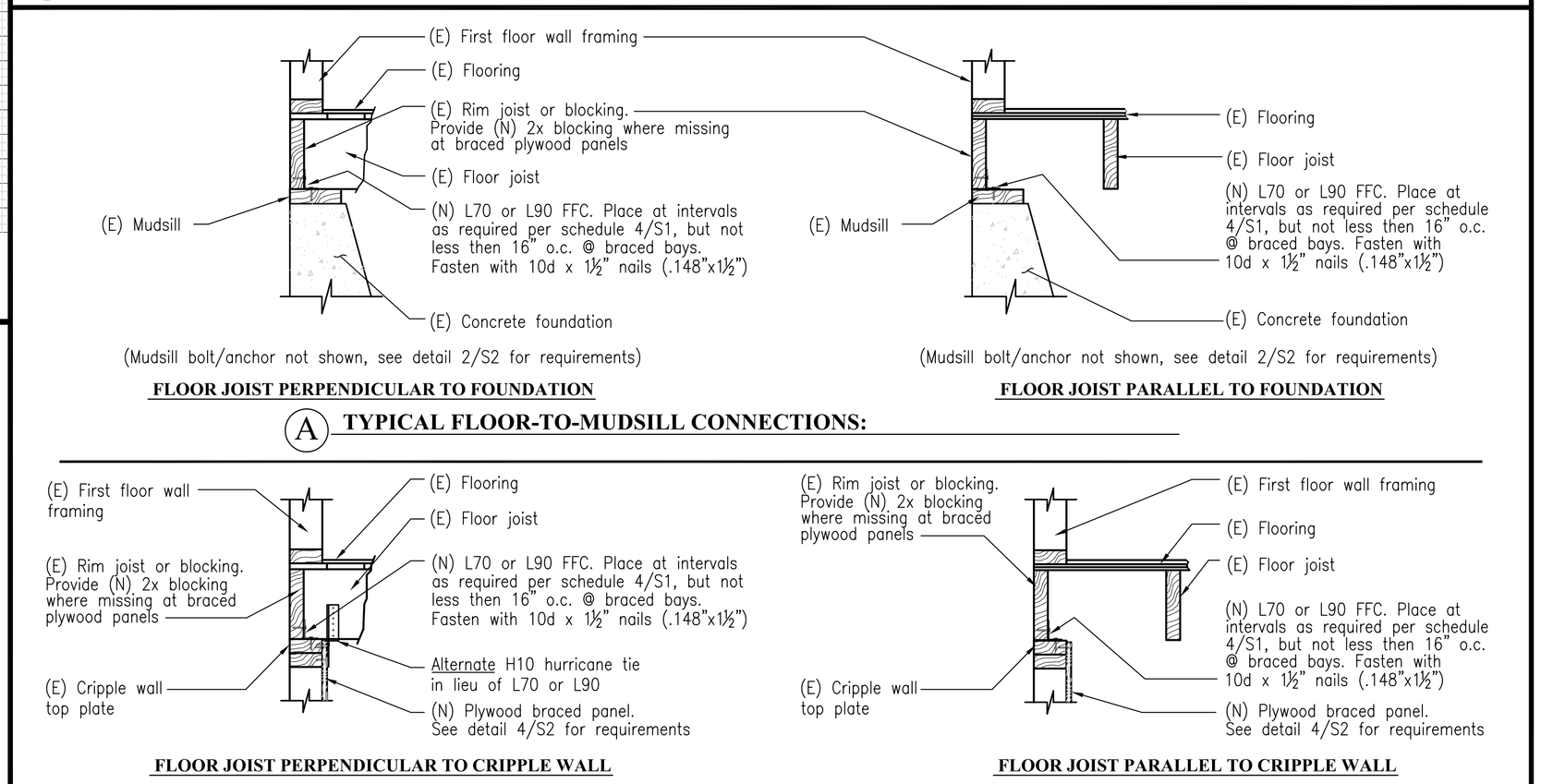

A TYPICAL FLOOR-TO-MUDSILL CONNECTIONS:

B FLOOR-TO-CRIPPLE WALL CONNECTIONS:

5 TYPICAL FLOOR-TO-CRIPPLE WALL OR FLOOR-TO-MUDSILL CONNECTIONS

SCALE: NTS

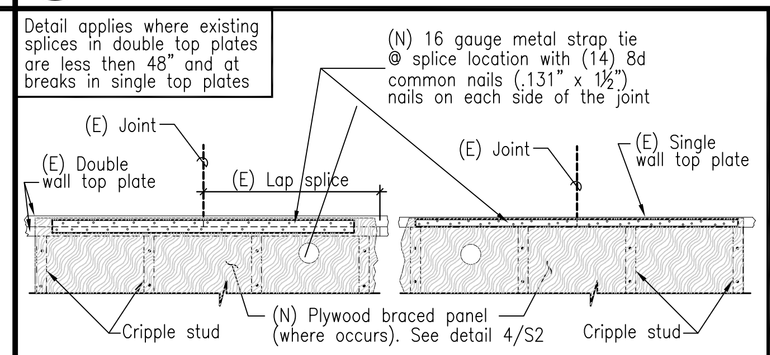

A DOUBLE TOP PLATE REINFORCING DETAIL

B SINGLE TOP PLATE REINFORCING DETAIL

6 TYPICAL TOP PLATE SPLICE DETAILS

SCALE: NTS

ACKNOWLEDGMENTS

This prescriptive plan set and the provisions for voluntary seismic retrofit of wood-frame homes were developed by a committee representing the East Bay and Peninsula chapters of the international code council (ICC). In addition, the plan development committee consisted of representatives from the following organizations who provided contributions and peer review:

A. Association of bay area governments (ABAG) earthquake program.
B. Building contractors specializing in home retrofitting.
C. California building officials (CALBO) emergency preparedness committee.
D. California building officials (CALBO) seismic safety committee.
E. Earthquake engineering research institute, Northern California chapter (EERI-NC)
F. ICC, TRI-chapter (East Bay, Peninsula, Monterey Bay) plan check standards committee.
G. Seismology & Structural standards, Light-Frame subcommittee, Existing building committe, Structural engineers association of Northern California (SEAONC)

NOTE – The professional organizations, governmental agencies and others involved in this process, including ICC and its chapters, SEAONC, CALBO, EERI-NC, their committees, and their individual members do not make any warranty or assume any legal liability or responsibility for the use of or reference to opinions, findings, conclusions or recommendations included in these drawings, plan sets, or booklets.

NOTE – Technical changes may not be made without the express permission of the committee.

APPLICANT INFORMATION

APPLICANT: _____

ADDRESS: _____

TELEPHONE: _____

PROPERTY ADDRESS: _____

OWNER: _____

APPLICANT'S SIGNATURE

STANDARD PLAN A (2008)
RESIDENTIAL SEISMIC STRENGTHENING PLAN

PRESCRIPTIVE SEISMIC STRENGTHENING PLAN FOR CRIPPLE WALL BRACING AND FOUNDATION SILL PLATE ANCHORAGE OF LIGHT WOOD FRAMED RESIDENTIAL STRUCTURES.

S2