City of San Leandro
Civic Center, 835 E. 14th Street
San Leandro, California 94577

**WPCP REHABILITATION PROJECT**
**PROJECT NO. 08-593-52-239**

# ADDENDUM NO. 3

March 28, 2011

TO: All Prospective Bidders

The additions and/or deletions contained in this Addendum shall be made a part of the plans and specifications and contract documents for the above described project, and shall be subject to all applicable requirements thereunder, as if originally shown and/or specified.

## THE CONTRACT BOOK SHALL BE REVISED AS FOLLOWS:

### Specifications

**Item 3.01** **Table of Contents, Division 16** – Add the following Sections:

"16751 DATA COMMUNICATIONS CABLING SYSTEM
16710 FIRE ALARM AND SMOKE DETECTION SYSTEM
16711 SECURITY SYSTEMS"

**Item 3.02** **Section 00300, Unit Price Schedule** – Delete the "Unit Price Schedule" in the proposal and replace it with "Addendum 3 – Revised Unit Price Schedule", herein attached. Bidders must submit "Addendum 3 – Revised Unit Price Schedule" with their bids.

**Item 3.03** **Section 00500, Unit Price Schedule** – Delete the "Unit Price Schedule" in the Agreement and replace it with "Addendum 3 – Revised Unit Price Schedule", herein attached.

**Item 3.04** **Section 00700-2.1.A**– Revise paragraph "A" to read as follows:

"**Basis of Award:** The award of the contract, if awarded, will be made within 90 days after the opening of bids to the lowest responsible bidder whose proposal complies with all the contract requirements and;
where the proposal is the lowest bid of the "Total Base Bid" or "Total Base Bid Plus Alternative Additive Bid" where the bid is less than, or equal to a funding amount to be publicly disclosed at the bid opening prior to the opening of the first bid in the following priority order:

1) Total Base Bid Plus Alternative Additive Bid
2) Total Base Bid

Stephen H. Cassidy, Mayor

City Council: Pauline Russo Cutter, Michael J. Gregory, Jim Prola, Ursula Reed, Diana M. Souza, Joyce R. Starosciak

The City reserves its right to reject any and all proposals.
The City provides the following as information only. It is an example of the bid award procedure. It is not a part of the contract documents.

| | Total Base Bid | Total Base Bid + Alternative Additive Bid |
|---|---|---|
| Bidder 1 | $10 | $15 |
| Bidder 2 | $8 | $20 |

- Publicly Disclosed Funding Amount of $25
  - In this example, Bidder 1 is the lowest responsible bidder with a bid of $15 for the Total Base Bid plus Alternative Additive Bid.
- Publicly Disclosed Funding Amount of $14
  - In this example Bidder 2 is the lowest responsible bidder with a bid of $8 for the Total Base Bid.

**Item 3.05** **Section 00700-2.4.E**– Delete the last sentence of this paragraph.

**Item 3.06** **Section 00700-2.7** – Add paragraph "C" as follows:

" C) OPERATIONS AND MAINTENANCE (O&M) MANUAL

1. Chapter 4 of the San Leandro Treatment Plant O&M manual is available for download at the below link. The manual shall only be used as reference information.

**ftp://ftp.ci.san-leandro.ca.us/**

you will need to use the following for your login and password once at the site:
login: wpcp password: slwpcp"

**Item 3.07** **Section 00700-6.7.B.1**– Revise Addendum No. 1 item 1.01 as follows:

"Equalization Facilities per section 01140-1.10 – within 120 working days."

**Item 3.08** **Section 01140-3.04.C.12.b.1)** – Delete Item 1) and replace with the following Item 1):

"1) Facility shall be substantially complete by the time required by Section 00700-6.7.B.1 to enable operation of equalization facilities using gravity diversion."

**Item 3.09** **Section 01140-3.04.D.3.b.3)** – Add sentence e) as follows:

" e) FFR"

**Item 3.10** **Section 01140-3.04.D.4.b.3)** – Add sentence e) as follows:

" e) FFR"

**Item 3.11** **Section 01354, Hazardous Material Procedures** – Delete this section in entirety and replace with the attached new Section 01354 – Addendum 3.

**Item 3.12** **Section 01355-1.04.B** – Delete Item B and replace with the following Item B:

"B. The CONTRACTOR shall not begin any construction work until the OWNER receives and accepts the Stormwater Pollution Prevention Plan and OWNER has submitted a Notice of Intent to the State."

**Item 3.13** **Section 02260-1.04.B.1.i** – Revise paragraph "i" to read as follows:

" The maximum height of cantilever shoring above the bottom of excavation shall not exceed 15 feet, including the 3 foot allowance for possible over excavation. Use braced shoring when the height of shoring above the bottom of excavation exceeds 15 feet, including the 3 foot allowance for possible over excavation."

**Item 3.14** **Section 02821-1.03.A** – Revise the words "6 feet" to read "7 feet".

**Item 3.15** **Section 02821-3.03.A** – Revise the words "6 feet high" to read "7 feet high".

**Item 3.16** **Section 02821-3.03.B** – Revise the words "6 feet high" to read "7 feet high".

**Item 3.17** **Section 09960-3.11.B.1.b** – Add the following words at the beginning of Item b: "All other locations:"

**Item 3.18** **Section 09675-1.03.A** – Revise to read as follows:

"A. Installer Qualifications: Applicators specialized in installing resinous flooring and coved base similar to that required for this Project. Applicators shall have a minimum of 5 years experience and be approved by the material manufacturer."

**Item 3.19** **Section 12495-1.02.A3** – Revise to read as follows:

"3. Mounting: Wall or ceiling mount, with fascia."

**Item 3.20** **Section 12495-2.02.B** – Revise Item 1 and Item 2 to read as follows:

"1. Material: MechoShade Systems "EcoVeil", or Nysan Shading Systems "Nysan GreenScreen Balance". Sunscreen materials containing vinyl or PVC not acceptable.

2. Pattern: Same as MechoShade Systems "EcoVeil –Dense Basket Weave Shadecloth 1350 Series". "

**Item 3.21** **Section 12495-2.02.C** – Revise Item 2 and Item 3 to read as follows:

"2. Pattern: Same as MechoShade Systems "EcoVeil –Dense Basket Weave Shadecloth 1550 Series

3. Percent Openness Factor: Approximately 3 percent."

**Item 3.22** **Section 12495-2.02.E** – Revise sentence to read as follows:

"E. Operation: Drive chain operation at side of units."

**Item 3.23** **Section 12495-2.02** – Add the following Item H:

"H. Fascia:

1. Continuous removable extruded aluminum fascia that attaches to shade mounting brackets without the use of adhesives, magnetic strips, or exposed fasteners.

2. Fascia shall be able to be installed across two or more shade bands in one piece.
3. Fascia shall fully conceal brackets, shade roller and fabric on the tube.
4. Provide bracket / fascia end caps where mounting conditions expose outside of roller shade brackets.
5. Notching of fascia for manual chain shall not be acceptable. "

**Item 3.24** **Section 15052-3.04-PIPING SCHEDULE** – For "PEF – PRIMARY EFFLUENT" service designation, modify the "UNDERGROUND" designation as follows:

| SERVICE | DIAMETER (INCHES) | MATERIALS | CLASS, SCHEDULE, OR THICKNESS | JOINTS/ FITTINGS | TEST PRESSURE/ METHOD | LINING | COATING | COMMENTS |
|---|---|---|---|---|---|---|---|---|
| UNDERGROUND | 4 TO 36 | DIP | CLASS 51 | RPO OR RMJ | 40 FEET/LH | CM | DOUBLE PEN | SEE NOTE 7 |
| UNDERGROUND BETWEEN EQUALIZATION DIVERSION BOX AND JUNCTION BOX NO. 2 | 30 | STEEL | AWWA C200 | FL, FLEX COUPLING | 40 FEET/LH | CM | CM/EPP AT HOLD-BACK | SEE NOTE 8 |

**Item 3.25** **Section 15251-1.03.A.1** – Delete Item 1 and replace with the following Item 1:

"1. Where restrained joints are specified in the Piping Schedule provided in Section 15052, restrain all joints and fittings in the piping system. Where an unrestrained piping system is specified in the Piping Schedule provided in Section 15052, design a restrained joint thrust restraint system to accommodate thrust loads encountered at fittings and appurtenances."

**Item 3.26** **Section 15251-2.01.B.5.a** – Delete Item a. and replace with the following Item a:

"a. Application: Where restrained mechanical joints are specified in the Piping Schedule provided in Section 15052, restrain all joints and fittings in the piping system."

**Item 3.27** **Section 15251-2.01.B.6.a** – Delete Item a. and replace with the following Item a:

"a. Application: Where restrained push-on joints are specified in the Piping Schedule provided in Section 15052, restrain all joints and fittings in the piping system."

**Item 3.28** **Section 15265-2.03.A** – Delete Items 1-3 and replace with the following Items 1-3:

1. "Fittings:
   a. Cast or ductile iron fittings as specified in Section 15251, sized for the dimensions of the pipe being used.
   b. Lining: Cement-mortar as specified in Section 15251, unless otherwise specified or indicated on the drawings.
   c. Coating: Asphalitic seal coat as specified in Section 15251, unless otherwise specified or indicated on the drawings.
   d. Restrain fittings with harness type restraints.
      1) Manufacturers: One of the following or equal.
         a) Star Pipe Products, Series 1000C.
         b) EBAA Iron Inc.
      2) Restrainers:

a) The restrainers shall have internal serrations that lock onto the pipe and provide 360° contact and support the pipe wall.
b) Ductile iron in accordance with ASTM Grade 536.
c) Coated with manufacturer's standard fusion bonded epoxy, NSF 61 certified.

3) Tie rods, T-bolts and Hexnuts:
a) Aboveground: High strength, low alloy steel in accordance with AWWA C111.
b) Buried and underwater: Type 316 stainless steel bolts in accordance with ASTM F 593.

4) Restraint shall allow post assembly angular deflection that is a minimum of 50 percent of the angular deflection allowed by the mechanical joint.

5) Restraint must have a pressure rating equal to or greater than that of the pipe on which it is being used and shall include a minimum safety factor of 2:1 for all sizes.

6) Restrain all fittings when restrained fittings are scheduled.

2. Joint design:
a. Push-on or mechanical joint type as identified in Piping Schedule.
b. The assembled joints shall meet the requirements of ASTM D 3139.
c. Restrain joints with harness type restraints.
1) Manufacturers: One of the following or equal.
a) Star Pipe Products, Series 1100C.
b) EBAA Iron Inc.

2) Restrainers:
a) The restrainers shall have internal serrations that lock onto the pipe and provide 360° contact and support the pipe wall.
b) Ductile iron in accordance with ASTM Grade 536.
c) Coated with manufacturer's standard fusion bonded epoxy, NSF 61 certified

3) Tie rods, T-bolts and Hexnuts:
a) Aboveground: High strength, low alloy steel in accordance with AWWA C111.
b) Buried and underwater: Type 316 stainless steel bolts in accordance with ASTM F 593.

4) Restraint shall allow post assembly angular deflection that is a minimum of 50 percent of the angular deflection allowed by the mechanical joint.

5) Restraint must have a pressure rating equal to or greater than that of the pipe on which it is being used and shall include a minimum safety factor of 2:1 for all sizes.

6) Restrain all joints when restrained joints are scheduled.

3. Gaskets: Neoprene, EPDM, or SBR in accordance with ASTM F 477."

**Item 3.29** **<u>Section 16751, DATA COMMUNICATIONS CABLING SYSTEM</u>** – Add new section in its entirety as attached herewith.

**Item 3.30** **<u>Section 17720-2.01.A</u>** – Delete Item A and replace with the following Item A:

A. "Acceptable Manufacturers:
1. Automation Direct
a. Direct Logic 205/305/405.
b. Productivity 3000 where I/O, memory, or programming requirements exceed Direct Logic capabilities.
2. Allen Bradley
a. CompactLogix.
b. ControlLogix where I/O, memory, or programming requirements exceed CompactLogix capabilities.

3. Siemens
   a. S7-1200.
   b. S7-300 where where I/O, memory, or programming requirements exceed S7-1200 capabilities."

**Drawings**

**Item 3.31** **Drawing 00-G-10** – Under "GENERAL NOTES", delete the first sentence of Note 4 and replace with the following:

"ALL MECHANICAL AND ELECTRICAL EQUIPMENT SHALL BE LISTED WITH A NATIONALLY RECOGNIZED TESTING LABORATORY SUCH AS UL, FM, CSA, INTERTEK (ETI), OR OTHER." In the third sentence of Note 4, delete the word "RESPOSABILITY" and replace with "RESPONSIBILITY".

**Item 3.32** **Drawing 00-TP-01** – Replace typical detail P002 with revised detail shown on attached Sketch 3.01.

**Item 3.33** **Drawing 00-TP-01** – Replace typical detail P003 with revised detail shown on attached Sketch 3.02.

**Item 3.34** **Drawing 00-TP-04** – Add typical detail P313 on attached Sketch 3.03.

**Item 3.35** **Drawing 00-SP-08** – Replace standard plan 602 with revised standard plan shown on attached Sketch 3.04.

**Item 3.36** **Drawing 01-D-04** – Next to callout for "BORROW AREA", add a leader line pointing to the borrow area and key note "12".

**Item 3.37** **Drawing 01-D-04** – Under "KEY NOTES" add key note 12 as follows:

"(12) EXIST 2,334 +/- CY SOIL STOCKPILE TO BE USED AS BORROW SOURCE. SOIL FROM STOCKPILE THAT QUALIFIES AS SUITABLE NATIVE MATERIAL IN ACCORDANCE WITH SECTION 02050 MAY BE USED FOR CONSTRUCTION OF EMBANKMENTS AT NEW EQUALIZATION BASIN. CONTRACTOR SHALL PREPARE SOIL AS NECESSARY FOR CONSTRUCTION. OFF-HAUL EXCESS STOCKPILED MATERIAL FOR DISPOSAL."

**Item 3.38** **Drawing 01-C-01** – Under "GENERAL NOTES", at the end of the last sentence of general note 7, revise the words "BELOW EL 10.00." to read "BELOW EL. -10.00."

**Item 3.39** **Drawing 01-C-01** – Under "GENERAL NOTES", add general note 13 as follows:

"13. PROJECT SITE CONTAINS SOILS KNOWN TO BE HAZARDOUS. SEE SPECIFICATION SECTION 01354."

**Item 3.40** **Drawing 01-C-01** – Under Key Note 2, revise words "6' HIGH FENCE" to read "7' HIGH FENCE".

**Item 3.41** **Drawing 01-C-02** – Under "GENERAL NOTES", add general note 4 as follows:

"4. SAMPLES TAKEN IN THE AREA WHERE THE EQUALIZATION BASIN WILL BE CONSTRUCTED INDICATE THE PRESENCE OF SOILS THAT ARE CONSIDERED HAZARDOUS. SEE SPECIFICATION SECTION 01354. CONTRACTOR SHALL TAKE ALL NECESSARY HEALTH AND SAFETY PRECAUTIONS WHILE CONDUCTING WORK IN THIS AREA."

**Item 2.42** **Drawing 01-C-02** – In upper left quadrant of drawing, delete callout for standard plans 134 and 222 and delete accompanying note to replace survey monument.

**Item 3.43** **Drawing 01-C-03** – Under "GENERAL NOTES", add general note 3 as follows:

"3. SAMPLES TAKEN IN THE AREA WHERE THE EQUALIZATION BASIN WILL BE CONSTRUCTED INDICATE THE PRESENCE OF SOILS THAT ARE CONSIDERED HAZARDOUS. SEE SPECIFICATION SECTION 01354. CONTRACTOR SHALL TAKE ALL NECESSARY HEALTH AND SAFETY PRECAUTIONS WHILE CONDUCTING WORK IN THIS AREA."

**Item 3.44** **Drawing 01-C-03** – Revise callout for "NEW 6' HIGH FENCE" to read "NEW 7' HIGH FENCE".

**Item 3.45** **Drawing 01-C-04** – Revise all callouts for "NEW 6' HIGH FENCE" to read "NEW 7' HIGH FENCE".

**Item 3.46** **Drawing 01-C-04** – Under Key Note 8, revise words "6 FOOT TALL SLATTED CHAIN LINK FENCING" to read "7 FOOT TALL SLATTED CHAIN LINK FENCING".

**Item 3.47** **Drawing 01-C-05** – Under "GENERAL NOTES", add general note 4 as follows:

"4. SAMPLES TAKEN IN THE AREA WHERE THE EQUALIZATION BASIN WILL BE CONSTRUCTED INDICATE THE PRESENCE OF SOILS THAT ARE CONSIDERED HAZARDOUS. SEE SPECIFICATION SECTION 01354. CONTRACTOR SHALL TAKE ALL NECESSARY HEALTH AND SAFETY PRECAUTIONS WHILE CONDUCTING WORK IN THIS AREA."

**Item 2.48** **Drawing 01-C-05** – Delete callout for standard plans 134 and 222 and delete accompanying note to replace survey monument.

**Item 3.49** **Drawing 01-C-06** – Under "GENERAL NOTES", add general note 5 as follows:

"5. SAMPLES TAKEN IN THE AREA WHERE THE EQUALIZATION BASIN WILL BE CONSTRUCTED INDICATE THE PRESENCE OF SOILS THAT ARE CONSIDERED HAZARDOUS. SEE SPECIFICATION SECTION 01354. CONTRACTOR SHALL TAKE ALL NECESSARY HEALTH AND SAFETY PRECAUTIONS WHILE CONDUCTING WORK IN THIS AREA."

**Item 3.50** **Drawing 01-C-06A** – Replace this drawing in its entirety with the attached revised drawing 01-C-06A.

**Item 3.51** **Drawing 01-C-06A** – Under "GENERAL NOTES", add general note 5 as follows:

"5. SAMPLES TAKEN IN THE AREA WHERE THE EQUALIZATION BASIN WILL BE CONSTRUCTED INDICATE THE PRESENCE OF SOILS THAT ARE CONSIDERED HAZARDOUS. SEE SPECIFICATION SECTION 01354. CONTRACTOR SHALL TAKE ALL NECESSARY HEALTH AND SAFETY PRECAUTIONS WHILE CONDUCTING WORK IN THIS AREA."

**Item 3.52** **Drawing 01-C-07** – Under Key Note 5, revise words "6 FOOT TALL SLATTED CHAIN LINK FENCING" to read "7 FOOT TALL SLATTED CHAIN LINK FENCING".

**Item 3.53** **Drawing 01-C-07A** – Replace this drawing in its entirety with the attached revised drawing 01-C-07A.

**Item 3.54** **Drawing 01-C-07A** – Under Key Note 14, revise words "6' TALL SLATTED CHAIN LINK FENCING" to read "7 FOOT TALL SLATTED CHAIN LINK FENCING".

**Item 3.55** **Drawing 01-C-26** – At Profile G for 24" PIN, between stations 1+00 and 1+50, delete the callout "24" x 21" RED".

**Item 3.56** **Drawing 01-C-26** – Under Key Notes, revise Key Note 3 to read:

"(3) CONNECT TO EXIST 21" PIN CONC CYLINDER PIPE PER TYP P878. FIELD LOCATE JOINT ON EXIST 21" PIPE AND VERIFY EXISTING PIPE CONDITION, MATERIAL, AND DIMENSIONS PRIOR TO FABRICATION OF CLOSURE PIECE. FABRICATE CLOSURE PIECE WITH A REDUCING SECTION TO ACCOMMODATE TRANSITION FROM 24" TO 21" PIPE."

**Item 3.57** **Drawing 20-S-07** – At Section E, revise callout "#6 @ 12" EWEF (TYP 3 WALLS)" to read "#5@ 6" EWEF (TYP 3 WALLS)"

**Item 3.58** **Drawing 20-S-07** – At Section G, revise callout "#6 @ 12" EWEF (TYP 3 WALLS)" to read "#5@ 6" EWEF (TYP 3 WALLS)"

**Item 3.59** **Drawing 10-M-04, Clarification of Addendum No. 1, Item 1.66** – Revise Drawing reference for Addendum No. 1, Item 1.66 from "10-M-01" to "10-M-04".

**Item 3.60** **Drawing 20-M-04** – At Plan A where new 30" PEF piping enters the existing primary clarifier effluent structure, revise the callout "INV EL 0.5+/-" to read "INV EL 0.0 +/-" and add the callout "P313/TYP" with a leader pointing at the pipe to wall interface.

**Item 3.61** **Drawing 95-E-01** – Next to callouts for key note "4", attach callout for key note "5".

**Item 3.62** **Drawing 95-E-01** – Under "KEY NOTES" add key note 5 as follows:

"(5) PROVIDE CABLE SUPPORT RACKS FOR ALL CABLES ROUTED TO MCC-10A/B VIA THE CABLE TRENCH. CABLE SUPPORT RACKS SHALL CONSIST OF PREFORMED CHANNEL MEMBERS WITH CABLE CLAMPS FOR EACH SET OF CABLES ROUTED VIA THE RACK. PROVIDE QUANTITY OF HORIZONTAL AND VERTICAL MEMBERS AS REQUIRED TO SUPPORT ALL CABLES ROUTED THROUGH THE TRENCH AND ANCHOR RACKS TO THE FLOOR OF THE TRENCH. THE LOWEST HORIZONTAL MEMBER OF THE CABLE SUPPORT RACKS SHALL BE A MINIMUM OF 12 INCHES ABOVE THE TRENCH FLOOR. CABLES SHALL BE SUPPORTED AT INTERVALS NOT EXCEEDING 36 INCHES."

**Item 3.63** **Drawing 90-A-01** – Building Data – Occupancy Groups CBC Section 304.1 – Revise note to read as follows:
"* Aggregate Quantities of hazardous materials stored and used in Lab do not exceed quantities set forth in Table 307.1(1) a7 (2). See Sheet 90-A-01A for Laboratory Hazardous Materials Chart."

**Item 3.64** **Drawing 90-A-01A** – Add the attached new drawing 90-A-01A.

**Item 3.65** **Drawing 90-E-05 – Clarification of Addendum Item 1.96 -** Change Exit signs at Doors 9002 (grid A/3.8) and 9024 (grid E/13) from wall mount type to ceiling mount type. Add directional exit sign in Hall 2 at grid 3.8.

**ATTACHMENTS:**

The following Attachments are appended to Addendum No. 3:

1. Specifications:
    a. Section 00300, Addendum 3 – Revised Unit Price Schedule
    b. Section 01354, Hazardous Material Procedures
    c. Section 16710, Fire Alarm and Smoke Detection System
    d. Section 16711, Security System
    e. Section 16751, Data Communications Cabling System
2. Drawings:
    a. 90-A-01A, Administration Control Building – Building Data
    b. 01-C-06A, Paving and Grading Plan – Area 5
    c. 01-C-07A, Paving and Grading Plan – Area 6
3. Sketches:
    a. 3.01 – Drawing 00-TP-01
    b. 3.02 – Drawing 00-TP-01
    c. 3.03 – Drawing 00-TP-04
    d. 3.04 – Drawing 00-SP-08

**PLEASE NOTE:**

**The Bid Opening Date Remains Tuesday, April 5, 2011 at 3:00 P.M.**

Acknowledge this addendum and include a signed copy of the Acknowledgement Form in your Proposal. If you have any questions, please call the Project Engineer, Kevin Chun, at 577-3412.

Very truly yours,

Kenneth Joseph, P.E., City Engineer
Engineering and Transportation Department
kjoseph@sanleandro.org
www.sanleandro.org

KJ:tar

## ACKNOWLEDGEMENT ADDENDUM NO. 3

**(Include a signed copy of this form in your proposal)**

I hereby acknowledge receipt of this Addendum for the above noted project.

_____ Date: _____
(Signature)

_____
(Business Name – Please Print)

cc: Internal Plans & Specs Distribution List
COSL Current Plan Holders

# ADDENDUM 3 – REVISED UNIT PRICE SCHEDULE

The following table must be filled out complete by the Bidder as part of this Bid Proposal. This table shows Add or Deduct Unit Prices that the Bidder will accept as adjustment to the Lump Sum Base Bid for quantities of work different than indicated in the Bidding Documents the amount resulting from applying to the difference the following unit prices. The acceptance or rejection of any or all Add or Deduct Unit Prices is at the option of the Engineer and will not necessarily be made on the basis of price alone.

| Item No. | Item Description | Unit | Estimated Quantity | Unit Price (in $/Unit) |
|---|---|---|---|---|
| 1. | Installation of epoxy injection system as indicated on Drawings 01-C-19, 20-S-01, 20-S-03, 65-S-01, 65-S-03, and 80-S-01 and as specified per 03931. | LF | 1,005 | |
| 2. | Installation of concrete crack and coating as indicated on Drawings 01-C-19, 20-S-01, 20-S-03, 65-S-01, 65-S-03, and 80-S-01 and as specified per Section 03925. | SF | 19,335 | |
| 3. | Installation of structural concrete repair as indicated on Drawings 01-C-19, 20-S-01, 20-S-03, 65-S-01, 65-S-03, and 80-S-01 and as specified per Section 03926. | SF | 1,430 | |
| 4. | Installation of stabilized soil (soil cement) for the Equalization Basin as specified in Section 02342. | SY | 12,000 | |
| 5. | Removal and offsite disposal at a Class II disposal facility of contaminated soils in existing onsite fills encountered during the excavation of trenches and structures and other work as specified in Section 01354 and as shown on Typical Details F020 & F021 on drawing 00-TF-01, and Typical Details P002 and P003 on drawings 00-TP-01." | Tons | 14,900 | |
| 6. | Installation of 4-foot Diameter Soil-Mix Columns as specified per Section 02250 and as indicated on Drawing 25-S-02. | LF | 4,100 | |
| 7. | Removal and offsite disposal of Bay Mud and backfill of any overexcavated volume. | Tons | 500 | |

**UNITS OF MEASURE:**

| Abbreviation | Word or Words |
|---|---|
| LF | Linear Feet |
| SF | Square Feet |
| CY | Cubic Yards |

**NOTE:** The estimate of construction quantities set forth herein is approximate only, being given as a basis for the comparison of bids. The City does not expressly nor by implication agree that the actual amount of work will correspond therewith, and reserves the right to change the amount of any class or portion of the work or to omit portions of the work as may be deemed necessary or expedient by the Engineer in accordance with Section 00700-3.2 "Changes Initiated by the City." All bids will be compared on the basis of the Engineer's Estimate of the quantities of the work to be done. The undersigned declares, by signing this proposal, that the bidder has carefully checked all of the above figures and understands that the City shall not be responsible for any errors or omissions on the part of the undersigned in making up this bid.

## SECTION 01354 – ADDENDUM 3

## HAZARDOUS MATERIAL PROCEDURES

### PART 1 GENERAL

### 1.01 SUMMARY

A. Section includes: Procedures required when encountering hazardous materials at the Work site.

B. Reference Section 00700-3.4.A.3 for additional requirements.

### 1.02 REFERENCES

A. American Conference of Government Industrial Hygienists (ACGHI).

B. American National Standards Institute (ANSI).

C. California Health and Safety Code, Section 25117.

D. State of California Code of Regulations (CCR):
   1. Title 8. Industrial Relations:
   2. Title 22. Social Security:
      a. Division 4. Environmental Health.
      b. Division 4.5. Environmental Health Standards for the Management of Hazardous Waste.

E. National Institute for Occupational Safety and Health (NIOSH).

F. Occupational Safety and Health Administration (OSHA).

G. Society for Protective Coatings (SPCC):
   1. Guide 6 - Guide for Containing Debris Generated During Paint Removal Operations.
   2. Guide 7 - Guide for the Disposal of Lead-Contamination Surface Preparation Debris.
   3. PA Guide 3 - A Guide to Safety in Paint Application.

H. United States Environmental Protection Agency (EPA).

I. United States Code of Federal Regulation (CFR):
   1. Title 29 - Labor.
   2. Title 40 - Protection of Environment.

### 1.03 SUBMITTALS

A. Submit laboratory reports, hazardous material removal plans, and certifications.

B. Site specific health and safety plan.

C. Identification of Waste Transportation Subcontractors:
   1. CONTRACTOR shall submit to OWNER, for approval, letters of commitment from waste transporters agreeing to handle wastes generated by performance of the Work.
   2. Attach the following information for each waste transportation company:
      a. Name and EPA identification number.
      b. A copy of the company's California Department of Transportation license.
      c. Address and telephone number.
      d. Name and telephone number of responsible contact.
      e. List of types and sizes of all transport vehicles and equipment to be used.
      f. A description of proposed transportation methods, schedules and procedures for hauling waste material, including type of vehicles that will be used for each class of waste and frequency of transport.
      g. Any and all necessary permit authorizations for each class of waste transported.
   3. Submit information at least 14 days prior to transporting material off site for disposal.

D. Identification of Waste Disposal Facilities:
   1. CONTRACTOR shall obtain and submit to OWNER, for approval, letters of commitment from licensed waste disposal facilities agreeing to dispose of any wastes generated by performance of the Work.
   2. Attach the following information for each waste disposal facility:
      a. General Information:
         1) Facility name and EPA Identification Number.
         2) Facility location and haul route distance from the Site.
         3) Name and telephone number of responsible contact for the facility.
      b. A listing of all permits, licenses, letters of approval, and other authorizations to operate, held by the proposed facility as they pertain to receipt and management of wastes derived from this Contract.
      c. The date of the proposed facility's last compliance inspection under RCRA.
      d. List of all active (unresolved) compliance orders (or agreements), enforcement notices, or notices of violation issued to the proposed facility, including the source and nature of the cause of violation, if known. If groundwater contamination is noted, provide details of the facility's groundwater monitoring program.
      e. List of acceptance criteria for each type of waste to be disposed.
   3. Submit information at least 14 days prior to transporting material off site for disposal.

E. Hazardous Waste Manifests/Bills of Lading: CONTRACTOR shall prepare a manifest for each load of material deemed hazardous waste and Bill of Lading for each load of material deemed non-hazardous waste. These manifests/Bills of Lading shall be delivered to the OWNER for the OWNER's completion and signature prior to shipment. This information shall be submitted a minimum of 48 hours prior to shipment.

F. Final Hazardous Waste Manifest/Bills of Lading Records: CONTRACTOR shall submit completed waste manifest records to OWNER within two business days after notification of receipt at the disposal facility.

G. Disposal Log: CONTRACTOR shall create and maintain a log for tracking disposal information for hazardous soil and other hazardous materials removed from the site. The Disposal Log shall be in tabular format and include the following information for each load of material disposed:
   1. Hazardous Waste Manifest/Bill of Lading number.
   2. Date transported from the site.
   3. Date received at disposal facility.
   4. Load weight as measured at the disposal facility.
   5. Name of disposal facility.

H. Disposal Facility Weight Records: CONTRACTOR shall submit to OWNER copies of all weight records obtained from the disposal facilities weekly, attached to the Disposal Log.

## 1.04 OPERATING DIGESTERS

A. Observe safety precautions in vicinity of operating digesters which contain digester gases, including methane, hydrogen sulfide, and carbon dioxide.

## 1.05 HAZARDOUS MATERIALS PROCEDURES

A. Hazardous materials are those defined by California Health and Safety Code, Section 25117.

B. Equalization Basin Construction: The area where the Equalization Basin will be constructed is known to contain soils classified as hazardous by the State of California and by the Resource Conservation and Reclamation Act (RCRA).
   1. Soil samples evaluated in the area where the Equalization Basin will be constructed were found to have hazardous lead and zinc concentrations based on State of California criteria for total and/or soluble metals and hazardous lead concentrations based on Federal criteria for soluble metals. Total arsenic, cadmium, and/or lead in the same soil samples exceeded respective environmental screening levels (ESLs) for the construction/trench worker scenario. Reference the project geotechnical report for results of soil testing performed in the area where the Equalization Basin will be constructed.
   2. Strippings, debris, unusable soils, and other material encountered within the Equalization Basin area that are not suitable for use in the construction of the basin shall be removed and disposed by the CONTRACTOR. Segregate material on site for classification prior to disposal.
   3. Soils encountered within the Equalization Basin area that are suitable for construction of the basin and basin berms shall remain within the area designated for soil stabilization. Suitable soils found in this area shall be stabilized or used to form the foundation below the stabilized material.
   4. CONTRACTOR shall designate a Certified Industrial Hygienist to issue pertinent instructions and recommendations for protection of workers and other affected persons' health and safety.
      a. The Certified Industrial Hygienist shall prepare a site specific health and safety plan.
      b. The plan must be accepted by the OWNER before being implemented.
      c. The excavation of any soil for the project shall not commence until the Contractor has proposed and implemented the site specific health and safety plan.

5. All personnel conducting work in areas containing hazardous materials shall be trained on the recognition and reporting of hazardous materials. Training shall include, but may not be limited to, HAZWOPPER certification.
6. Notify CalOSHA and other agencies as required by State and Federal Laws and Regulations within the time required by each agency prior to commencement of work in contaminated areas.
7. CONTRACTOR or designated subcontractors shall be licensed to undertake storage, removal, transportation, disposal, and other remedial work required by, and in accordance with, laws and regulations.

C. Existing On-site Fills: Portions of the project site outside the area where the Equalization Basin will be constructed are overlaid by fill material that may require off site disposal. These soils have not been characterized for possible contaminants.
   1. In accordance with Typical Details F020, F020, P002 and P003 included on the Drawings, the CONTRACTOR shall include in his bid the disposal of on-site fill materials excavated during trenching and construction of new structures at a Class 2 disposal facility.
   2. Removal and disposal of this material is applicable to Item No. 5 in the Unit Price Schedule as indicated in Sections 00300 and 00500.
   3. Segregate and stockpile all excavated fill materials on site for characterization and classification prior to disposal. CONTRACTOR shall conduct necessary chemical testing to verify requirements of designated receiving landfill.
   4. All personnel conducting trenching and excavation work in existing on-site fills shall be trained on the recognition and reporting of hazardous materials. Training shall include, but may not be limited to, HAZWOPPER certification.

D. When hazardous materials have been found that are not identified on the Contract Documents:
   1. Prepare and initiate implementation of plan of action.
   2. Notify immediately OWNER, ENGINEER, and other affected persons.
   3. Notify such agencies as are required to be notified by Laws and Regulations with the times stipulated by such Laws and Regulations.
   4. Designate a Certified Industrial Hygienist to issue pertinent instructions and recommendations for protection of workers and other affected persons' health and safety.
   5. Identify and contact subcontractors and licensed personnel qualified to undertake storage, removal, transportation, disposal, and other remedial work required by, and in accordance with, laws and regulations.

E. Forward to ENGINEER, copies of reports, permits, receipts, and other documentation related to remedial work.

F. Assume responsibility for worker health and safety, including health and safety of subcontractors and their workers.
   1. Instruct workers on recognition and reporting of materials that may be hazardous.

G. File requests for adjustments to Contract Times and Contract Price due to the finding of Hazardous Materials in the Work site in accordance with Contract Documents.

1. Minimize delays by continuing performance of the Work in areas not affected by hazardous materials operations.

## 1.06 LEAD PAINT REMOVAL AND DISPOSAL

A. Existing paint on interior and exterior surfaces may contain lead in concentrations which will require implementation of hazardous material compliance procedures as legislated by the following:
   1. United States Code of Federal Regulations, Title 29 and Title 40.
   2. State of California Code of Regulations, Title 8 and Title 22.

B. A limited lead survey and evaluation has been prepared to assist the CONTRACTOR in assessing the potential impact to worker exposure and possible regulatory requirements associated with the Work. See Attachment A for testing results.

C. Remove samples of paint from the structures identified herein and have samples tested by a certified testing laboratory to determine lead content in samples:
   1. Ensure that sufficient numbers of paint samples are removed and tested to provide adequate information regarding lead content in paint.
   2. Ensure that samples contain the total thickness of the paint to the substrate where removed.
   3. Ensure that each sample contains a sufficient quantity of paint to facilitate proper and adequate analyses by testing laboratory.
   4. Ensure that samples are adequately identified with location from which it was removed.

D. Laboratory Testing of Paint Samples: Utilize Method 1311 - Toxicity Characteristic Leaching Procedure in accordance with Appendix II of 40 Codes of Federal Regulations 261:
   1. Submit 10 copies of complete laboratory analyses of paint samples.

E. Submit a plan for the removal, containment, and disposal of lead based paint and associated debris:
   1. Submit 10 copies of plan.

F. Prior to beginning work associated with the removal, containment, and disposal of lead-based paints, prepare and submit to the ENGINEER for his review 6 copies of the following:
   1. Listing of lead paint removal equipment to be used.
   2. Outline of procedures to be used to remove lead paint.
   3. Data and specifications describing chemical stripping materials to be used.
   4. Data and specifications describing abrasive blast materials and grit size to be used.
   5. Plan describing lead paint removal, hazardous waste debris containment, and hazardous waste disposal methods.
   6. Safety plan, consisting of a written plan of action covering operational requirements for safe removal of lead paint, safe handling and containment of waste and debris generated by the operation, and safe disposal of hazardous waste and non-hazardous waste materials, complying with the most stringent requirements of the following:
      a. Equipment and material manufacturer's safety sheets.
      b. Steel Structure Painting Council-PA Guide 3.

c. 29 Codes of Federal Regulations 1910.1000.
d. 29 Codes of Federal Regulations 1910.134.

G. Carry out lead paint removal, containment, and disposal work in accordance with the following steel structure painting council guidelines:
1. Steel Structure Painting Council Guide 61: Guide for Containing Debris Generated During Paint Removal Operations.
2. Steel Structure Painting Council Guide 71: Guide for the Disposal of Lead-Contaminated Surface Preparation Debris.

H. Comply with Code of Federal Regulations, U.S. Department of Health and Human Services NIOSH Standards, U.S. Department of Labor OSHA Standards, U.S. EPA Standards, American Conference of Government Industrial Hygienists Standards, Bay Area Air Quality Management District requirements, and ANSI Standards as referenced in Steel Structure Painting Council Guide 61 and Steel Structure Painting Council Guide 71.

I. Lead paint removal methods acceptable for use as described in Steel Structure Painting Council Guide 61, Section 5, "Description of Methods and Systems" include:
1. Open Abrasive Blast Cleaning with Expendable Abrasive.
2. Open Abrasive Blast Cleaning with Recyclable Abrasive.
3. Closed Abrasive Blast Cleaning with Recyclable Abrasive.
4. Chemical Stripping.

J. Assume responsibility for the proper utilization of the paint removal method selected. When abrasive blast cleaning is selected to remove lead-based paint, comply with all applicable federal, state, and local air quality, pollution, and environmental control regulations for blast cleaning. When chemical stripping is selected to remove the lead based paint, adhere to the chemical manufacturer's recommendations for the application of the product, the removal of the paint, and the containment of the debris.

K. Lead paint removal work shall be performed by a Contractor having prior experience in the removal method selected and shall provide at least 5 references of similar projects completed, 3 of which must have been completed within the past 12 months, documenting his experience.

L. Utilize a Class 3 containment and ventilation system as described in Steel Structure Painting Council Guide 61 during lead paint removal and containment procedures. Comply with the following requirements as described in Steel Structure Painting Council Guide 61:
1. Containment Materials: Type A1 - Rigid or Type A2 - Flexible.
2. Permeability of Containment Materials: Type B1 - Air Impermeable.
3. Support Structure: Type C1 - Rigid or Type C2 - Flexible Support Structure.
4. Joints: Type D1 - Fully Sealed Joints.
5. Entryways: Type E2 - Overlapping Door Tarps.
6. Air Make-up System: Type F1 - Controlled Air Make-up.
7. Input Air Flow System: Type G1 - Forced Input Air Flow.
8. Air Flow Air Pressure: Type H2 - Visual Verification.
9. Air Movement: in accordance with Type I1 - Minimum Air Movement Specified.
10. Exhaust Dust Filtration System: Type J1 - Air Filtration System.

11. Method for Assessing Quantity of Emissions from Site: Method A: Visible emissions with a Level O emissions requirement. Perform abrasive blasting inside containment structures.

M. Do not leave spent abrasive blast material, chemical stripping material, or lead paint debris uncontained on the project site overnight.

N. Test each container of paint debris, spent blast cleaning abrasive, chemical stripping debris, and other waste material generated by the operation to determine the waste material hazardous waste classification.

O. Assume responsibility for the disposal of lead paint waste and associated waste generated by the removal of the lead paint and the preparation of the surfaces for recoating. Dispose in accordance with applicable federal, state, and local requirements and regulations.

P. Accurately complete the Uniform Hazardous Waste Manifest included at the end of Steel Structure Painting Council Guide 71. Indicate on the Manifest that the OWNER is the hazardous waste generator, and obtain the OWNER's Environmental Protection Agency identification number for use in completing the Manifest.

## 1.07 ASBESTOS MATERIALS

A. It is the specific intent of these Contract Documents to exclude from the Work the provision or installation of any and all products or materials containing asbestos. No products containing asbestos shall be incorporated in the Work.

B. An asbestos survey and evaluation has been prepared to assist the CONTRACTOR in assessing the potential impact to worker exposure and possible regulatory requirements associated with the Work. See Attachment B for testing results.

C. Where asbestos is found, removal of existing asbestos materials shall be performed by a subcontractor registered by Cal-OSHA and certified by the State Contractors Licensing Board. Submit copies of this certification to the ENGINEER. The CONTRACTOR shall be responsible for the proper removal and disposal of asbestos material. Comply with Bay Area Air Quality Management District requirements.

## 1.08 OFF-SITE SOIL AND DEBRIS DISPOSAL

A. Equalization Basin Construction:
   1. CONTRACTOR shall stockpile strippings, debris, unusable soil and other material removed from the Equalization Basin area on site pending classification. Stockpile locations will be specified by the ENGINEER. CONTRACTOR shall supply all materials, equipment, and services required for testing, excavating, loading, hauling, and stockpiling operations.
   2. CONTRACTOR shall be responsible for the removal and disposal of all soils and other material, including material classified as hazardous in association with the Work.
   3. CONTRACTOR shall be responsible for making all arrangements for acceptance of hazardous soil or other materials at licensed, OWNER-approved disposal facilities, in good standing with regulatory authorities.

4. CONTRACTOR shall ensure that all storage, loading, and transportation of hazardous soil or other materials are in compliance with all applicable federal, state, and local transportation regulations.
5. CONTRACTOR shall supply all materials, equipment and services required for storage and transportation of hazardous soils or other materials associated with the Work to disposal locations approved by the OWNER.

B. Existing On-site Fills:
1. CONTRACTOR shall stockpile existing fill materials removed during the excavation of new trenches and structures on site pending characterization and classification. Stockpile locations will be specified by the ENGINEER. CONTRACTOR shall supply all materials, equipment, and services required for testing, excavating, loading, hauling, and stockpiling operations.
2. CONTRACTOR shall be responsible for the removal and disposal of all soils in association with the Work.
3. CONTRACTOR shall be responsible for making all arrangements for acceptance of soil or other materials at licensed, OWNER-approved disposal facilities, in good standing with regulatory authorities.
4. CONTRACTOR shall ensure that all storage, loading, and transportation of soils are in compliance with all applicable federal, state, and local transportation regulations.
5. CONTRACTOR shall supply all materials, equipment and services required for storage and transportation of soils associated with the Work to disposal locations approved by the OWNER.

C. The OWNER will be responsible for signing all Hazardous Waste Manifests and Bills of Lading (non-hazardous), and will be identified as the Generator on all waste-related documents.

## 1.09 PERMITS AND FEES

A. CONTRACTOR shall be responsible for obtaining and paying for all permits and fees required for completion of the Work.

# PART 2 PRODUCTS

Not Used.

# PART 3 EXECUTION

## 3.01 MATERIAL SEGREGATION

A. CONTRACTOR shall establish and maintain separate stockpiles for soil and other materials removed the Equalization Basin area; for concrete, debris, and other material removed from excavations; and for excavated existing fill materials designated under Item 5 in the Unit Price Schedule.

B. CONTRACTOR may temporarily stockpile soil within the area to be excavated, but, as quickly as is practical, transfer the soil to the designated separate stockpile areas.

## 3.02 MATERIAL PLACEMENT AND STOCKPILE MAINTENANCE

A. CONTRACTOR shall construct stockpiles/storage areas in locations designated by the ENGINEER.

B. CONTRACTOR shall maintain stockpiles until the stockpiled soil is transported off-site

C. CONTRACTOR shall protect stockpile, control precipitation runoff, and minimize dust generation by using appropriate dust control measures.

## 3.03 OFF-SITE TRANSPORTATION

A. CONTRACTOR shall transport wastes to licensed off-site locations approved by the OWNER.

B. CONTRACTOR shall only use the licensed transporter(s) identified in letters of commitment and approved by OWNER for the performance of Work. Any use of substitute or additional transporters must have previous written approval by OWNER.

## 3.04 HAZARDOUS WASTE MANIFEST PROCEDURES

A. CONTRACTOR shall utilize a state-approved manifest system so that wastes can be tracked from generation to ultimate disposal. The manifests must comply with all the provisions of the transportation and disposal regulations. CONTRACTOR shall be responsible for preparing manifests for each load a minimum of 48 hours prior to shipment. If the manifest is acceptable, the OWNER will provide the generator number and sign the generator's certification portion of the manifests. If the manifest is not acceptable, CONTRACTOR shall make all corrections at no additional cost to the OWNER.

B. CONTRACTOR shall be responsible for accurate and timely completion of final Hazardous Waste Manifests. All transporters must sign the appropriate portions of the manifest and must comply with all of the provisions established in state and federal DOT regulations. The disposal facility must sign the appropriate portions of the manifest and return it to the CONTRACTOR the day of disposal.

## 3.05 SPILL PREVENTION

A. CONTRACTOR shall utilize appropriate vehicles and operating practices to prevent spillage or leakage of materials from occurring on site or en-route with wastes.

## 3.06 CONTAMINATION PREVENTION

A. CONTRACTOR shall be responsible to assure thorough transport vehicle decontamination and inspections before leaving the site. All vehicles leaving work areas shall be inspected by the CONTRACTOR to ensure that no soil adheres to its wheels or undercarriage. Any such material shall be removed at the work area or the decontamination pad before the truck is allowed to leave the property.

B. CONTRACTOR shall regularly inspect off site roadways along the designated routes that the vehicles take from the site to ensure that no leakage or tracking of

mud has occurred. If contaminated materials resulting from leakage or tracking are observed along the designated roadways, CONTRACTOR shall immediately clean the area at CONTRACTOR's expense and modify procedures as necessary to prevent recurrence.

C. CONTRACTOR shall be responsible for any and all actions necessary to remedy situations involving materials spilled in transit or mud and dust tracked offsite. This cleanup shall be accomplished at the CONTRACTOR's expense.

## 3.07 DELIVERY SCHEDULE

A. CONTRACTOR shall coordinate the schedule for truck arrival at the project site and at the disposal facility to meet the approved project schedule. The schedule shall be compatible with waste stockpiling/storage space limitations and the availability of equipment and personnel for material handling operations.

## 3.08 COMBINATION OF WASTES

A. CONTRACTOR shall not combine materials from other projects with material from the site.

## 3.09 OFFSITE DISPOSAL

A. CONTRACTOR shall use only the disposal facilities identified in the submittal for the performance of the work and approved by OWNER. Substitutions are permitted only upon written approval by OWNER.

END OF SECTION

# ATTACHMENT A

# LIMITED LEAD SURVEY AND EVALUATION

ProTech
Consulting & Engineering

1208 Main Street, Redwood City, CA 94063
(650) 569-4020 Fax (650) 569-4023

Date: March 11, 2011
Report #: 021-MA11.2
DHS Certified Inspector: **Emanuel Dounias**
DHS Certified Lead Inspector 13059

# *LIMITED LEAD SURVEY AND EVALUATION*

*PROJECT:*

**San Leandro Water Pollution Plant**
3000 Davis Street
San Leandro, California

*PREPARED FOR:*

Mr. Kevin Chum
**City of San Leandro**
835 E. 14th Street
San Leandro, CA 94577

*PREPARED BY:*

**PROTECH CONSULTING AND ENGINEERING**

## INTRODUCTION

January-March 2011, **ProTech Consulting and Engineering** performed a cursory survey to detect the presence of lead-based paint (LBP) the San Leandro Water Pollution Plant located at 3000 Davis Street, San Leandro California. Lead survey work was performed for the purpose of identifying the presence of lead-based (LBP) paint on major building components throughout the site. ProTech's lead survey services were conducted at the request of The City of San Leandro, San Leandro, California.

The following report presents the results of ProTech's lead building survey. Lead-related consulting services were conducted by Mr. Emanuel Dounias. The objective of ProTech's lead survey was limited to providing the following scope services:

- Conduct a survey of the subject sites to identify suspect LBP on major building components.
- Take random reading of painted surfaces by X-ray fluorescence (XRF) detector to determine the presence of lead-based paint on major building components.
- Make general recommendations as appropriate.

This screening survey was conducted for the purpose of generally characterizing the presence of lead-based paint on major building components. ProTech does not represent this screening survey as a comprehensive survey or evaluation. This survey and the sampling methodology used during this scope of work did not comply with comprehensive HUD lead survey methods of protocol.

**AREA(S) REQUESTED**

- Lead services were limited by the client to the following areas:

**January 2011**

1. Digester units1, 2, and 4 – renovation
2. Sedimentation tanks – demolition
3. Head works building – gut and abandon
4. Fixed Film Reactor (FFR) – demolition
5. Clarifiers – rehabilitation
6. Administration office – renovation/addition

**March 2011**

1. Standby generator and fuel tank
2. Motor control center (MCC) boxes
3. Cat-walk, clarifier #4
4. Silver rails and stairs, aeration tanks
5. Sludge aeration & sludge conditioning tanks
6. Lift station to FFR
7. Wall penetrations, centrifuge building

## SCOPE LIMITATIONS & EXCLUSIONS

- The following **area(s)** were not accessible during the survey and are excluded from this report:
  - There was no access within any tanks (digester, clarifier, settling and reactor). There was also no access to any confined spaces within ProTech's scope of work

## RESULTS

Lead was detected in various amounts on a variety of building components. Sample results fell into one of three categories a follows:

| | | |
|---|---|---|
| 1 | Lead-based paint (LBP) | 1 milligrams of lead per square centimeter ($mg/cm^2$) or greater |
| 2 | Lead-containing paint (LCP) | <1 $mg/cm^2$ of lead |
| 3 | No detected lead (ND | 0 or <0 $mg/cm^2$ of lead |

### Samples Collected January 2011

There were one-hundred & five (105) XRF reading taken throughout that site including 6 calibration readings. The results of these reading are summarized as follows:

| | |
|---|---|
| LBP: | Fourteen (14) readings tested positive for lead-based paint (LBP). LBP was detected on a limited number of surfaces in various areas of the site. |
| LCP: | Twenty-eight (28) readings tested positive for lead-containing paint. |
| ND: | No lead was detected in fifty-seven (57) readings. |

### Samples Collected March 2011

There were forty-eight (48) XRF reading taken throughout that site including 6 calibration readings. The results of these reading are summarized as follows:

| | |
|---|---|
| LBP: | Fifteen (15) readings tested positive for lead-based paint (LBP). LBP was detected on a limited number of surfaces in various areas of the site. |
| LCP: | Eight (8) readings tested positive for lead-containing paint. |

| | |
|---|---|
| ND: | No lead was detected in nine-teen (19) readings. |

**Interpretation of XRF Readings:**

- Lead-based paint (LBP) is defined as paint (or other coating) that contains 1 mg/cm$^2$ of lead or greater.

- Test results below 1 mg/cm$^2$ but above 0 1 mg/cm$^2$ are considered to contain detectable amounts of lead. These results are reported with a 95% confidence limit as calculated by the XRF paint analyzer.

- Lead may be present in paint/coatings reported as Zero (0) or less than 0. Zero (0) or "non-detected" XRF results cannot be used to determine that no lead is present for Cal OSHA worker protection purposes. Cal OSHA regulates lead at very low levels when employees engage in certain tasks involving lead. A more sensitive analytical method must be used to show that no lead is present for Cal OSHA compliance. Employers, whose employees plan to disturb painted surfaces at this site should assume that some lead is present unless proven otherwise via paint chip sampling and laboratory analysis.

An inventory of all sample results can be found in the attached "Lead Survey Report". Paint sampling was not comprehensive or representative of all painted surfaces.

## PAINT CHIP SAMPLE RESULTS

Because no lead-based paint (LBP) was detected on certain materials during XRF testing, representative paint-chip samples were colleted and submitted to a certified laboratory for analysis. Cal OSHA requires laboratory analysis to prove if lead is present at levels below the XRF quantification limit. The reason Cal OSHA requires paint-chip analysis is because they regulate materials that contain lead in any amount.

During the survey, eleven (11) paint chip samples were submitted for laboratory analysis by atomic absorption (AA) spectroscopy. Detectable amounts of lead were reported in seven of eleven (7 of 11) samples. Cal OSHA lead construction standards must be implemented and followed if employees perform trigger tasks on surfacing containing detectable amounts of lead.

Sample results were reported as follows:

| Sample Description & Location | Sample No | Results PPM | LBP | LCP | Lead Free |
|---|---|---|---|---|---|
| **Samples Collected January 2011** | | | | | |
| White drywall paint – Admin/Control building | LP-01 | 0.28 | No | Yes | No |
| White paint on concrete wall – Admin/Control building | LP-02 | 0.24 | No | Yes | No |

| | | | | | |
|---|---|---|---|---|---|
| Green paint on wood window components - Admin/Control building | LP-03 | <0.009 | No | No | Yes |
| Brown concrete pant digester #1 | LP-04 | 0.29 | No | Yes | No |
| White metal paint on top digester #1 | LP-05 | <0.007 | No | No | Yes |
| White metal paint on top of digester #2 | LP-06 | <0.05 | No | No | Yes |
| White paint in pump house of digester #4 on concrete wall/ceilings | LP-07 | 0.074 | No | Yes | No |
| Gray paint in pump house of digester #4 on concrete floor | LP-08 | 0.009 | No | Yes | No |
| Gray paint on Cat walk metal beam of clarifier 2 | LP-09 | <0.03 | No | No | Yes |
| White concrete wall/ceiling paint in pumping plant interior | LP-10 | 0.25 | No | Yes | No |
| White concrete wall paint on pumping plant exterior | LP-11 | 0.033 | No | Yes | No |
| **Samples collected March 2011** | | | | | |
| Generator tank white metal paint | LP-01 | 0.010 | No | Yes | No |
| Generator "House: yellow metal paint | LP-02 | <0.007 | No | No | Yes |
| Clarifier #4 catwalk gray metal paint | LP-03 | <0.03 | No | No | Yes |
| Centifridge building gray interior metal wall paint | LP-04 | 0.007 | No | Yes | No |
| Centifridge building brown exterior metal wall paint | LP-05 | <0.02 | No | No | Yes |
| M.C. C box gray metal paint | LP-06 | <0.1 | No | No | Yes |
| M.C.C box white metal paint | LP-07 | 0.010 | No | Yes | No |

Weight % = Total lead content in weight percent
PPM = Parts per million

## CONCLUSION AND RECOMMENDATION

- ProTech recommends that lead hazards be remediated by a qualified lead abatement contractor. All lead abatement work should be performed by DHS certified personnel employing lead work practices in accordance with HUD guidelines.

- Any work performed at the subject site where LBP or LCP is likely to be disturbed should be performed by a contractor trained and qualified to perform lead-related construction work. Any work performed to remediate a lead hazard should be performed by DHS certified personnel employing lead work practices in accordance with HUD guidelines.

- ProTech recommends that contractors employ HUD developed, lead safe work practices if lead coated surfaces are to be impacted or disturbed. In general, "lead safe work practices" would include methods for controlling lead dust; properly controlling, collecting and disposing of lead waste; worker training, monitoring, and protection; and environmental monitoring.

- Contractors whose employees disturbs more that 100 sq ft of lead-based paint (LBP) are required to submit written notification to Cal OHSA (per Health and Safety Code, Title 17 CCR Section 36000 (c)). The Cal OSHA LBP notification rule under requires 24-hour advance notice prior to LBP disturbance.

- Contractors, whose employees work at this site, are required to assess if their work will be subject to the requirements of the Cal OSHA lead construction standard (CCR Title 8 § 1532). Cal OSHA standards are designed to regulate and enforce on-the-job worker safety. Employers are required by law to ensure that employees are not exposed to airborne lead levels which exceed the permissible exposure limit (PEL). The standard requires worker exposure monitoring, medical surveillance, training, special work practices, etc.

  Cal OSHA requires compliance with their lead construction regulation when:

  1. The permissible exposure limit (PEL) will or may be exceeded. The PEL is an exposure to airborne lead dust of 50 micrograms of lead per cubic meter of air (50 $\mu g/m^3$) over an 8-hour time weighted average (TWA).

  2. Employees perform "trigger activities" that impact a material containing lead in any detectable amount. Cal OSHA mandates that an employer assume the PEL will be exceeded when his/her employees conduct "trigger activities" involving lead. Trigger activities are defined as follows:

| Trigger Activity | Anticipated Exposure | Required Respirator |
|---|---|---|
| • Manual demolition<br>• Manual scraping and sanding<br>• Heat gun use<br>• Use of power tools with dust collection systems<br>• Spray painting with lead paint<br>• Any other activity that the employer has any reason to believe that an employee may be exposed in excess of the PEL. | 50-100 $\mu m/m^3$ | Half-mask, air purifying |
| • Using lead containing mortar<br>• Lead burning<br>• Rivet busting<br>• Power tool cleaning without dust collection system<br>• Clean up of dry abrasive blast residue. | 500-2500 $\mu m/m^3$ | Full-face, air purifying, or Tight fitting PAPR, or Supplied air, contiguous flow |
| • Abrasive blasting<br>• Welding<br>• Cutting<br>• Torch burning. | >2500 $\mu m/m^3$ | Supplied air, pressure demand |

- Contractors whose employees will be working on this project are required to assess lead exposure risk to their employees (as per Cal OSHA lead standard CCR Title 8 § 1532.1). In making this evaluation, contractors should:

1. Review all lead related documents and reports.

2. Become familiar and comply with Cal OSHA and other applicable lead regulations.

3. Make an assessment to determine potential worker exposure relative to the various lead-related construction work to be performed.

4. Collect supplemental data/samples if necessary.

5. Assess and monitor worker lead exposure levels during the performance of lead trigger tasks or other activities that may potentially expose workers to levels above the Cal OSHA permissible exposure level.

6. Determine compliance requirement relative to DOSH notification rules.

- Painted surfaces that contain levels of lead below 1 mg/cm$^2$, may create lead lead-contamination if paint is turned into dust by abrasion, scraping, or sanding. This report should be kept by the owner and all future owners for the life of the building.

- ProTech recommends that the building owner establish baseline soil and dust lead levels at the subject site. Contractors performing work at the site should then be required to leave the site "clean" relative to pre-existing conditions as established by baseline sampling.

- ProTech recommends that the building owner disseminate this report as well as any other lead-related information to all prospective contractors bidding work at the subject site. Contractor should be encouraged to evaluate and possibly supplement this data to assess potential worker exposure impact and possible regulatory requirements associated with their particular construction scope of work.

## LEAD STANDARDS

The following is a discussion of the lead paint, dust, and soil standards established by the California Department of Health Services (DHS), California Occupational Safety and Health Administration (Cal OSHA), Environmental Protection Agency (EPA), and U.S. Department of Housing and Urban Development (HUD). These standards were used to compare with the sample results obtained during the risk assessment of the subject property.

**Lead-Based Paint and Lead-Containing Materials:**
The DHS, EPA, and HUD define "lead-based paint" (LBP) as any surface coating which contains a lead content of 5,000 parts per million (ppm) (or 0.5% by weight) or greater. Accordingly, surface coatings containing a lead content below these levels are not

considered LBP and are not considered a hazard as defined by DHS, EPA, and HUD. LBP can present a lead hazard if the paint is damaged or deteriorated.

Cal OSHA defines lead-based paint at the Consumer Product Safety Commission's (CPAC) level of 600 ppm for non-trigger tasks (trigger tasks are discussed in the Lead-based Paint Regulation section of this report). However, when trigger tasks are conducted, the Cal OSHA regulation must be followed when there is **any detectable lead** in the product being disturbed.

| Government Agency | Lead-based Paint Definition | Lead-containing Material Definition |
|---|---|---|
| *OSHA and Cal OSHA* | 600 ppm or greater | Any detectable amount |
| *DHS* | 1 mg/cm² or 5,000 ppm (or greater) | N/A |
| *EPA* | 1 mg/cm² or 5,000 ppm (or greater) | N/A |
| *HUD* | 1 mg/cm² or 5,000 ppm (or greater) | N/A |

**Lead In Dust:**
The DHS, EPA, and HUD have each established lead in dust standards to define the presence of a lead hazard. According to these agencies, a lead hazard is determined to be present when lead wipe sample results are at or above the following hazard levels.

| Sample Location | Hazard Level |
|---|---|
| Hard floors | 40 $\mu$m/sq ft (50) |
| Interior window sills & horizontal surfaces | 250 $\mu$m/sq ft |
| Exterior floors & horizontal window surfaces | 400 $\mu$m/sq ft |

**Lead In Soil:**
The DHS, EPA, and HUD have each established lead in bare soil standards to define the presence of a lead hazard. According to these agencies, a lead hazard is determined to be present when bare soil sample results are at or above the following hazard levels.

| Sample Location | DHS Hazard Level |
|---|---|
| Bare soil (dwelling perimeter and yard) | 1,000 PPM |
| Bare soil (children's play areas) | 400 PPM |

## LEAD-BASED PAINT REGULATIONS

**California Department of Health Services (DHS) - Title 17, CCR, Division 1, Chapter 8, Sections 35000-361000:**
The DHS has implemented a comprehensive regulation that provides an accreditation process for lead training providers and professionals. This regulation requires anyone

conducting lead paint surveys, risk assessments, lead paint abatement and lead hazard reduction work in any public or residential building to be DHS trained and certified.

A written abatement plan describing exposure prevention procedures, abatement methods, items to be abated, re-survey recommendations, and instructions on how to maintain potential lead hazards in a safe condition is required for all abatement work. DHS also requires notification of upcoming abatement work on Form 8551. This form must be posted at all job site entrances five days before abatement begins.

The standard requires inclusion of certain elements in each hazard evaluation report including a copy of DHS Form 8552. In addition, the standard requires the use of HUD guidelines when performing lead risk assessments, surveys, monitoring, abatement and interim control work.

**Environmental Protection Agency (EPA) - Title X:**
Under the Housing and Community Development Act of 1992 (Title X) Congress required the EPA to take on many responsibilities. A few of the key issues are discussed below.

On August 28, 1996, the EPA issued a model lead training and accreditation regulation. States were given two years to develop their own programs or adopt the EPA program. In California, the Department of Health Services (DHS) has developed a state training and accreditation program which is currently in effect.

In March 1996, the EPA issued the Real Estate Notification and Disclosure Rule. This rule requires owners of all private housing built before 1978 to take four actions, as follows:

1. Disclose any known hazards to potential buyers or renters.
2. Give potential buyers or renters the EPA/HUD lead disclosure pamphlet titled "Protect Your Family from Lead In Your Home."
3. Allow potential buyers ten days to conduct an optional survey or risk assessment.
4. Add language to real-estate contracts that confirms compliance with the activities described above.

The EPA's objective is to control renovation and remodeling work done in homes that might create lead dust hazards. In May 1998, they issued a regulation that will take effect in June 1999 requiring contractors working in pre-1978 homes to notify the owner if they will disturb more that two square feet of lead-paint.

**Department of Housing and Urban Development (HUD):**
HUD was the first agency to develop lead standards. By the end of the 1980's, HUD was developing numerous regulations and guidance documents to be used on HUD funded properties. In 1989, HUD published the most comprehensive lead guidance document for survey and management of lead paint hazards to date. A new guidance document ("Guidelines for the Evaluation and Control of Lead-Based Paint Hazards in Housing") for risk assessments, surveys, interim controls, and abatement of lead-based paint hazards replaced the old standard in August 1995. Chapter 7 of the 1995 guideline was revised in October 1997.

The new HUD Standard remains the most comprehensive lead risk assessment, survey, management, and abatement guidance document. Many other federal, state, and local regulations mandate compliance with HUD Guidelines.

**California Occupational Safety and Health Administration - CCR Title 8 § 1532:**
Cal OSHA regulations are designed to regulate and enforce on-the-job worker safety. Employers are required by law to ensure that employees are <u>not</u> exposed to airborne lead levels which exceed the permissible exposure limit (PEL) of 50 micrograms of lead per cubic meter of air (50 $\mu g/m^3$) over an 8 hour time weighted average (TWA). Both California and Federal OSHA standards requires worker training, air monitoring to determine work exposure to lead, initial blood testing, personal protective equipment, and specific work practices and engineering controls whenever employees disturb lead in **any concentration** (including less than 600 ppm) where the disturbance will result in exposures to airborne lead in concentrations over the OSHA Action Limit or PEL.

OSHA mandates that an employer **assume** the PEL will be exceeded when conducting "trigger activities". The Cal OSHA standard also requires DHS lead training and certification for any supervisors or workers who are shown to be exposed to airborne lead levels above the PEL.

Thank you for this opportunity to be of service, please contact me if you require additional information.

Respectfully Submitted,

Emanuel Dounias
DHS Certified Lead Inspector 13059

Glen Koutz
DHS Certified Lead Inspector I2204

# Water Pollution Control Plant
# Control Building
# Evacuation Routes

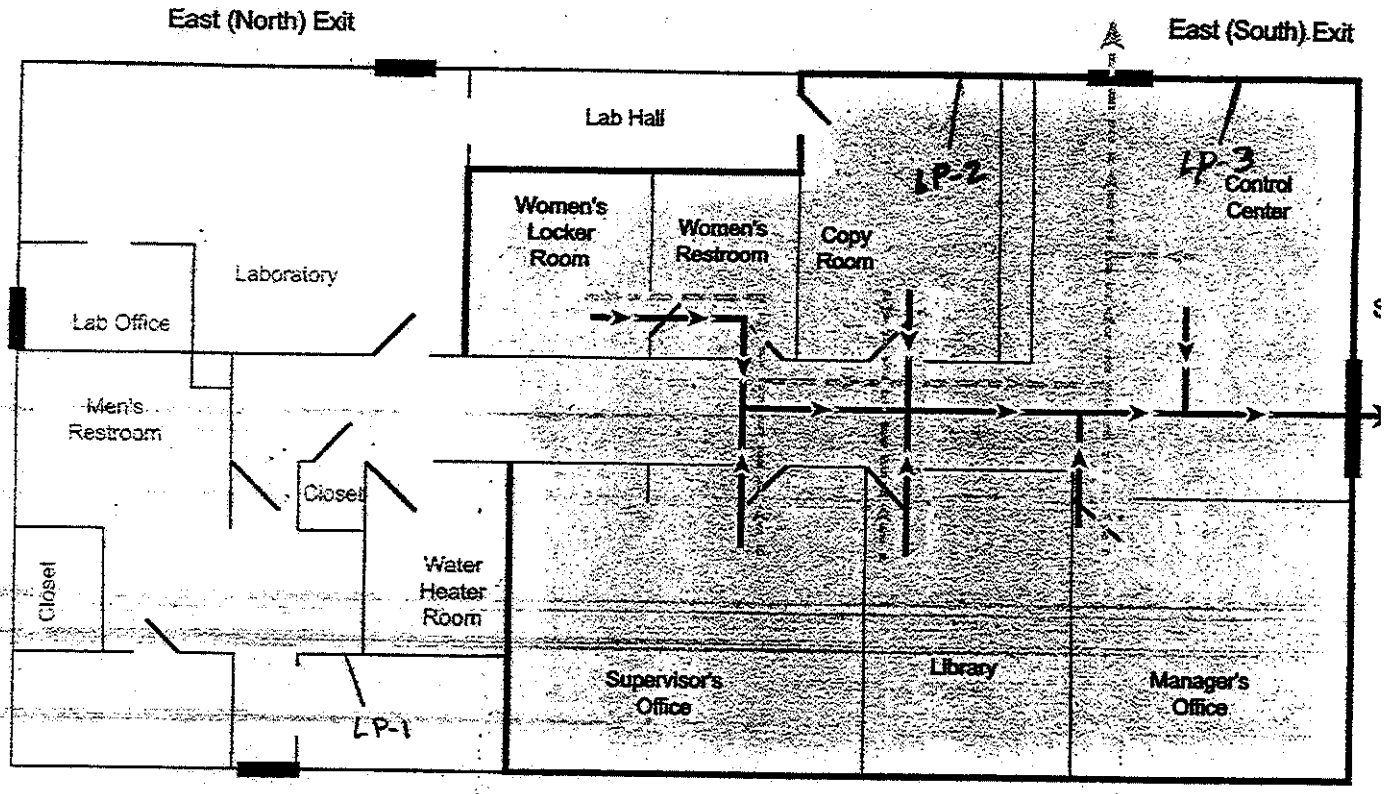


Map is not to scale

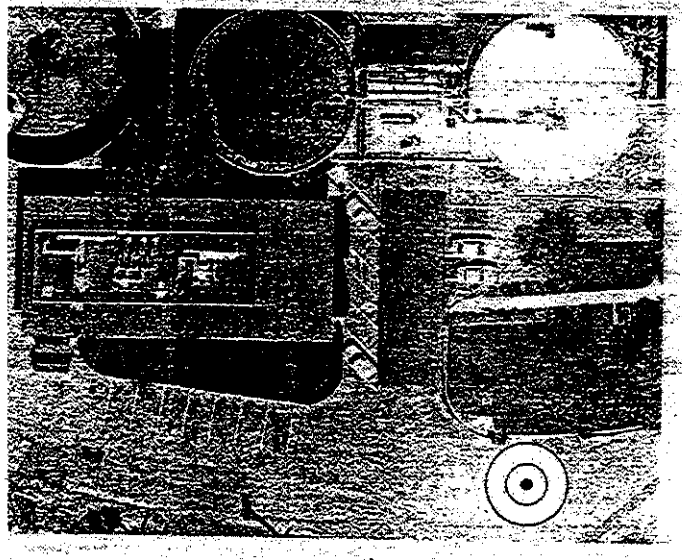

Assembly Location in Parking Lot

Primary Evacuation Route

Secondary Evacuation Route

**Women's Locker Room, Women's Restroom, Copy Room, Control Center, Manager's Office, Library, Supervisor's Office**

LEAD Paint
Bulk Sample locations

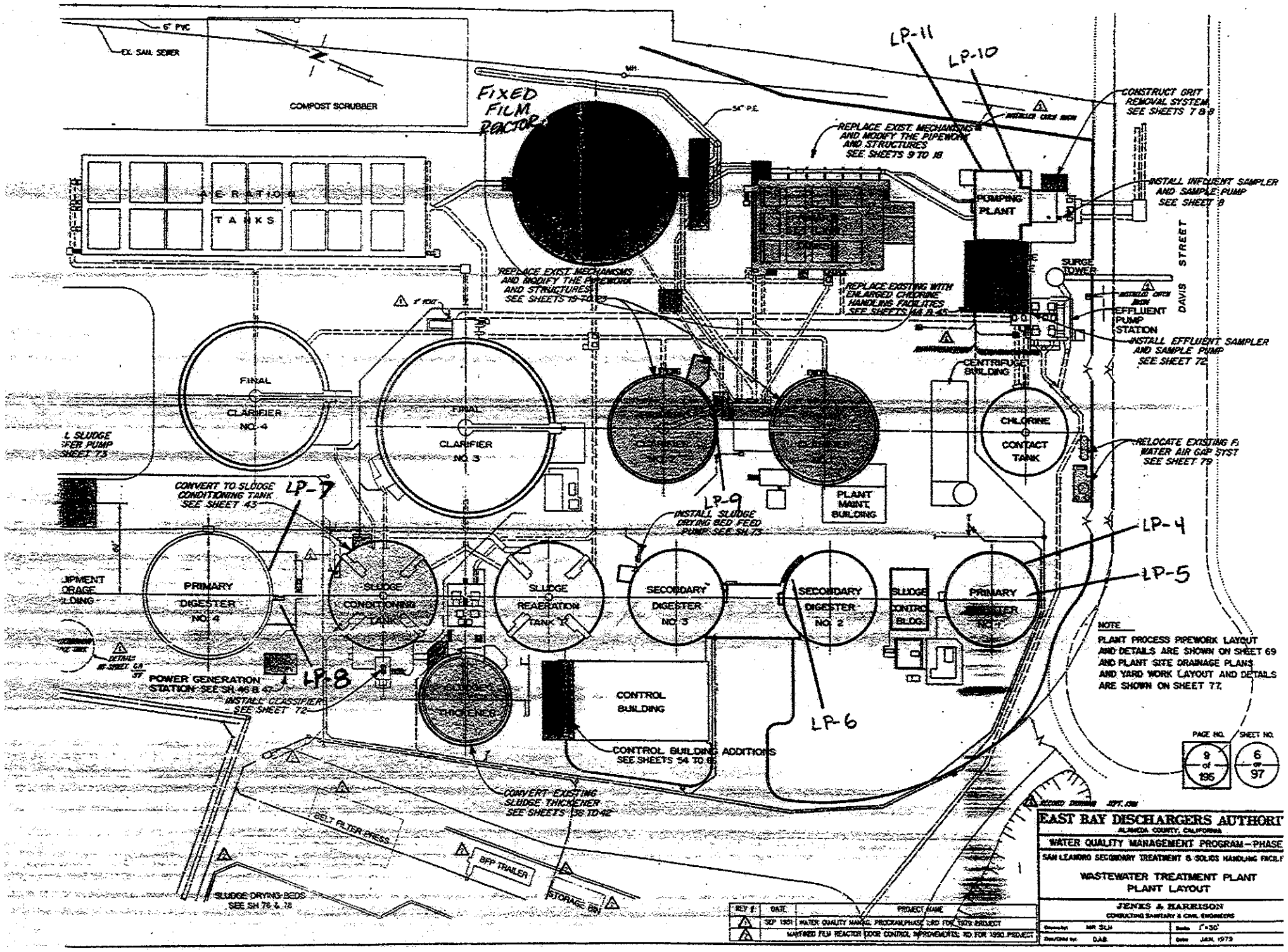


LEAD Paint Bulk Sample Locations

# ATTACHMENT B

# ASBESTOS SURVEY AND EVALUATION

ProTech
Consulting & Engineering

1208 Main Street, Redwood City, CA 94063
(650) 569-4020 Fax (650) 569-4023

Date: March 17, 2011 Revision 2
Report #: **021-MA11.2**

LIMITED SCOPE ENVIRONMENTAL CONSULTING SERVICES

# *PRE-DEMOLITION/RENOVATION ASBESTOS SURVEY AND EVALUATION*

*PROJECT:*

**San Leandro Water Pollution Plant**
3000 Davis Street
San Leandro, California

*PREPARED FOR:*

Mr. Kevin Chun
**City of San Leandro**
835 E. 14th Street
San Leandro, CA 94577

*PREPARED BY:*

**PROTECH CONSULTING AND ENGINEERING**

*Emanuel Dounias*

**Emanuel Dounias**
DOSH Certified Site Surveillance Technician
Certificate No.: **00-2766**

# TABLE OF CONTENTS

*ASBESTOS BUILDING SURVEY REPORT*

## REPORT BODY


| | |
|---|---|
| Introduction | Page 3 |
| Consulting Scope of Services | Page 4 |
| Sample Results & Asbestos Regulatory Assessment | Page 4 |
| Interpretation of Results | Page 5 |
| Asbestos Assessment Notes | Page 7 |
| Conclusions and Recommendations | Page 8 |
| Discussion<br>• Asbestos and its uses<br>• Current asbestos regulations | Page 9 |
| Exclusions and Report Limitations | Page 11 |
| Survey Methodology | Page 14 |


## APPENDICES


| | |
|---|---|
| Treated Wood Comments | Appendix 1 |
| PLM Laboratory Reports | Appendix 2 |
| Survey Scope of Work | Appendix 3 |
| Sample Locations | Appendix 4 |

## INTRODUCTION

On January-March 2011, ProTech Consulting and Engineering performed a limited scope hazardous materials survey. ProTech's hazardous materials consulting services were conducted at the request of the City of San Leandro. Consulting services were performed in preparation for total demolition of the project.

| | |
|---|---|
| PROJECT NAME | San Leandro Water Pollution Control Plant |
| PROJECT LOCATION | 3000 Davis Street, San Leandro, California |
| FACILITY TYPE | Water pollution plant |

**Certified Staff:**
Environmental consulting services were performed by ProTech's team of licensed and accredited inspectors as follows:

| CONSULTANT | DISCIPLINE | ISSUING AGENCY | CERTIFICATION NO. |
|---|---|---|---|
| Glen Koutz | Asbestos<br>Lead | Cal OSHA<br>CDPH | 92-0019<br>2204 |
| Emanuel Dounias | Asbestos<br>Lead | Cal OSHA<br>CDPH | 00-2766<br>13059 |

## CONSULTING SCOPE OF SERVICES

Consulting services were limited by the client to the following scope of services:

| | |
|---|---|
| SERVICE REQUESTED | • Inspect the site to identify, inventory, and catalog visibly accessible suspect asbestos-containing materials (ACM);<br>• Collect samples of suspect ACM for laboratory analysis;<br>• Process and submit suspect ACM samples for laboratory analysis by standard polarized light microscopy (PLM) to determine asbestos content;<br>• Assess the friability and abatement classification of identified ACM;<br>• Identify the approximate location of each ACM;<br>• Make general recommendations as appropriate. |
| ELEMENT(S) INVESTIGATED | Limited to Asbestos |

| | |
|---|---|
| AREA(S) REQUESTED | • Asbestos services were limited by the client to the following areas:<br><br>**January 2011**<br>1. Digester units1, 2, and 4 – renovation<br>2. Sedimentation tanks – demolition<br>3. Head works building – gut and abandon<br>4. Fixed Film Reactor (FFR) – demolition<br>5. Clarifiers – rehabilitation<br>6. Administration office – renovation/addition<br><br>**March 2011**<br>1. Standby generator and fuel tank<br>2. Motor control center (MCC) boxes<br>3. Cat-walk, clarifier #4<br>4. Silver rails and stairs, aeration tanks<br>5. Sludge aeration & sludge conditioning tanks<br>6. Lift station to FFR<br>7. Wall penetrations, centrifuge building |
| SCOPE LIMITATIONS & EXCLUSIONS | There was no access within any tanks (digester, clarifier, settling and reactor). There was also no access to any confined spaces within ProTech's scope of work |

| SCOPE OF WORK NOTES |
|---|
| Limitations were established by the Client to include items of interest and concern to the Client. ProTech is only responsible for the specific scope of work agreed to. No other services are intended or implied |
| ProTech does not provide expert roof patching services. We strongly urge the Client to hire a licensed roofing contractor to patch and repair our sample locations. ProTech is not responsibility for possible future roof leaks. |

## Sample Results & Asbestos Regulatory Assessment

The following tables summarize information about each suspect asbestos-containing material including sample number(s), and laboratory results (**Asbestos types are abbreviated as follows:** Chr = Chrysotile; Amo = Amosite; Cro = Crocidolite; Tre = Tremolite; Act = Actinolite).

| Material Description | Material Location(s) | Sample Numbers | Results Asbestos % | Regulatory Assessment DOSH | Regulatory Assessment EPA / AQMD | Approx. Quantity |
|---|---|---|---|---|---|---|
| **Control Admin Building** | | | | | | |
| 1. Drywall | Random walls & ceilings | 1,2,3*,4, 5 | None detected to <1% Chry | Class II Abatement | Non-friable | 5000 Sq ft |
| 2 Black mastic below Light tan with dark tan streaks 12x12 vinyl floor tile | Throughout most, exposed below carpet and other vinyl resilient flooring | 14B,15B | 5% Chry | Class II Abatement | Non-friable | 3000 Sq ft |
| 3 Yellow mastic below pink 12x12 vinyl floor tile | Supervisors office over light tan 12x12 floor tile | 16B | 5% Chry – black mastic | Class II Abatement | Non-friable | 300 sq ft. |
| 4 Transite fume hoods | Lab | Not sampled | Assumed asbestos | Class II Abatement | Non-friable | 3 hoods |
| 5 Silver black roofing mastic | Patches, penetrations, support pads, flashing ect. | 31,32 | 10% Chry | Class II Abatement | Non-friable | 500 Sq ft |
| 6 Gray window caulk | Around window casing (rough opening) | 36, 37 | 2% Chry | Class II Abatement | Non-friable | 18 windows |
| **Pumping Plant** | | | | | | |
| 7 Drywall | Interior /exterior build out walls | 40, 41*, 42* | None detected to <1% Chry | Class II Abatement | Non-friable | 1500 sq ft. |
| 8 White parapet cap | Perimeter parapet | 46 | 10% Chry | Class II Abatement | Non-friable | 800 sq ft. |
| **Digesters 1, 2 & 4** | | | | | | |
| 9. Grey caulking | On seam between concrete and metal | 50*, 51*, 52 | None detected to 10% Chry | Class II Abatement | Non-friable | 500 ln ft. |
| 10 Silver built up roofing | Digester #4 pump house | 55*, 56 | None detected to 10% Chry | Class II Abatement | Non-friable | 700 sq ft. |
| **Sludge Aeration Tank** | | | | | | |
| Silver/black pipe coating | North east side of tank below catwalk inside of sludge condition tank | 06 sample on 03/01/11 | 10% Chry | Class II Abatement | Non-friable | 150 sq ft. |

**Confirmation of <1% PLM Results:**
Materials (listed above) reported as <1% asbestos have NOT been subjected to confirmational analysis (by PLM point-count or other) analysis to confirm. Confirmational analysis is required to handle/treat these materials as <1% asbestos. Confirmation is required because the standard PLM analysis is not sensitive enough to accurately determine asbestos content at or below 1%.

In certain situations, there is an economic advantage to confirming that a material contains less than 1% asbestos. ProTech will consult with the client, at clients request to evaluated any benefits and costs associated with confirmation sampling.

## Non-Asbestos Materials

No asbestos was found in the following materials:

| | Material Description | Material Location(s) | Sample Numbers |
|---|---|---|---|
| | **Control / Admin Building** | | |
| 1. | Tan insulation mastic | Water heater room behind foam wall insulation | 6 |
| 2 | Tan base cove mastic | Mangers office | 7 |
| 3 | Ceramic mortar wall to base cove | Throughout most and back wall of lab | 8 |
| 4 | Ceramic mortar | Men's locker room/ Women's Locker room behind blue ceramic wall & floor tile | 9 |
| 5 | Ceramic mortar | Men's locker room behind brown ceramic wall & floor tile | 10 |
| 6 | Ceramic mortar | Men's locker room behind tan ceramic shower tile | 11 |
| 7 | Ceramic mortar | Women's Locker room behind blue/green shower tile | 12 |
| 8 | White with gray 12x12 vinyl floor tile with yellow mastic | Men's locker storage room | 13 |
| 9 | Light tan with dark tan streaks 12x12 vinyl floor tile | Throughout most, exposed below carpet and other vinyl resilient flooring | 14,15 |
| 10 | Pink 12x12 vinyl floor tile with yellow mastic | Supervisors office over light tan 12x12 floor tile | 16 |
| 11 | Gray/ Tan sheet flooring | Lab, Lab office and Lab hall | 17 |
| 12 | Fissured 2x4 ceiling panels | Random areas | 18,19,20 |
| 13 | Perforated 2x4 ceiling panels | Lab & Lab office | 21,22,23 |
| 14 | Off white counter top | Lab counters | 24 |
| 15 | HVAC Joint tape | Duct above ceilings | 25, 26, 27 |
| 16 | Gray black HVAC joint tape mastic | Roof HVAC ducts | 28,29 |
| 17 | Gray black roofing mastic | Patches, penetrations, support pads, flashing ect. | 30 |
| 18 | Silver black pad membrane | Support pads, flashing ect. | 33 |
| 19 | Tar & gravel roof | | 34,35 |
| 20 | Black window caulk | Around window casing | 38, 39 |

| | | | |
|---|---|---|---|
| **Pumping Plant** | | | |
| 21 | Stucco | Adjacent overhang stucco wall | 43 |
| 22 | Black roof mastic | Vent penetrations | 44 |
| 23 | White penetrations membrane | Vent, pipe, mechanical penetrations | 45 |
| 24 | White parapet wall | Perimeter parapet | 47 |
| 25 | Tan built up roofing | Roofing | 48, 49 |
| **Digesters 1, 2 & 4** | | | |
| 26 | Blue cementitious pipe | On digester #1 | 53 |
| 27 | Gray elastomeric cover | O foam top of digester #4 | 54 |
| **Primary Setting Tank** | | | |
| 28 | Black concrete lining | Sprayed on inside concrete of tank | 57, 58, 59 |
| **Sludge Aeration Tank** | | | |
| 27 | Black tank liner | Inside tank on concrete walls | 01, 02, 03 |
| 28 | Blue cementicious pipe coating | South east side of tank outside of tank | 04 |
| 29 | Blue, tan, silver black pipe coating | North east side of tank adjacent cat walk outside of tank | 05 |
| **Sludge Condition Tank** | | | |
| 30 | Black tank liner | Inside tank on concrete walls and all metal pipes, columns, etc inside tank | 07, 08, 09 |
| 31 | Blue cemeticious pipe coating | East side outside of tank | 10 |
| **Centrifuge Building** | | | |
| 32 | Tan fastener mastic | Interior fiberglass insulation fasteners | 11, 12, 13 |

# INTERPRETATION OF RESULTS

## Results Categories

Samples collected during this survey were submitted to a certified laboratory for analysis by standard polarized light microscopy (PLM). PLM sample results fell in to 1 of 3 categories as follows:

| RESULT CATEGORIES | EXPLANATION | REGULATORY IMPACT |
|---|---|---|
| 1. Asbestos Containing Material (ACM) | Material containing greater than 1% asbestos. | Is subject to all regulatory standards. |
| 2. Less than 1% asbestos (<1%) | May be treated as <1% if confirmation sampling is performed.<br><br>Confirmation analysis must be performed by PLM 400 point-counted or better method. | If <1% is confirmed then:<br><br>• EPA and AQMD treat <1% asbestos as **non-asbestos**.<br><br>• Cal OSHA has <1% asbestos removal and handling standards that must be followed. |
| 3. None Detected (ND) | No asbestos detected during PLM analysis. | Not regulated. |

## Positive and Negative (conflicting) Sample Results

The EPA has a specific protocol for sampling suspect asbestos building materials. In general, it recommends collecting multiple samples (often a minimum of three) samples of suspect asbestos materials. Multiple samples are recommended by the EPA to increase the statistical reliability of the results and to minimize the potential for error.

Sometimes, multiple samples representing a particular material will yield both positive and negative results. When this happens, the negative sample result(s) are superseded by the positive results. **Once a single positive sample is identified, the material represented by the sampling is treated as an asbestos-containing material.**

However, if additional sampling data, as-built plans, or other reliable data can adequately explain or confirm that area(s) testing positive are different (not homogeneous) from areas that tested negative, this information can be used to more accurately quantify ACM and define the scope of an asbestos abatement job.

**Special Rules for Drywall:**
The US Environmental Protection Agency (EPA) and most local air quality management districts (AQMD) allow composite analysis of drywall; joint tape and joint compound (components mixed together/homogenized when analyzed). Drywall, joint tape and joint compound are the only materials that can be composited. The EPA and AQMD's rationale is that joint compound is an integral part of the drywall and cannot be removed independently. However, they do not extend this rationale to any other material or layered systems. **All other materials must be analyzed layer-by-layer as dictated by the regulatory standards.**

The EPA and AQMD consider wall/ceiling skim coat texturing (topping mud/texture other than joint compound) that are applied to drywall surfaces to be "add-on" materials. Add-on materials are not treated like joint compound. Add-on materials (when present) require separate analysis independent of the drywall. In other words, **add-on materials cannot be composited with drywall during analysis.**

Cal OSHA does NOT allow composite sampling in any case - not even drywall/joint compound. Cal OSHA requires that all layers of a sample be analyzed and reported separately.

## Asbestos Assessment Notes

### Cal OSHA/NOSHA Assessment Notes

**Asbestos-Containing Material (ACM):** A material is an asbestos containing material (ACM) when the sample aggregate or any one of its layers (analyzed individually) contains greater than 1% asbestos. Cal OSHA does **not** allow composite analysis (mixing layers of materials together).

**Less than 1% Asbestos:** Materials containing less than 1% asbestos are not regulated by most governmental agencies. However, Cal OSHA is not one of those agencies. The Cal OSHA asbestos standard must be followed for work involving materials that contain a concentration of asbestos as low as **0.1%.**

If a material can be shown to contain less than 1% asbestos by PLM point count (or other approved method), it can be treated as an asbestos-containing construction material (ACCM). ACCM is a term Cal OSHA uses to describe materials containing **less than 1%** (but greater than 0.1%) asbestos. In certain situations, there may be some economic advantages to making this characterization. The decision to do so is evaluated on a case-by-case basis at the client's request.

**Less than 0.1% Asbestos:** If a material can be shown to contain less than **0.1%** asbestos by an approved method, it can be treated as a non-asbestos material. In certain situations, there may be some economic advantages to making this characterization. The decision to do so is evaluated on a case-by-case basis at the client's request.

**Class I Asbestos Work:** Cal OSHA prescribes specific work practices involving the removal of asbestos-containing insulation and surfacing (i.e. sprayed-on) materials.

**Class II Asbestos Work**: Cal OSHA prescribes specific work practices involving the removal of ACM which is not insulation or surfacing material. This includes, but is not limited to, the removal of asbestos-containing wallboard, floor tile and sheeting, roofing, cement products, and construction mastics.

### EPA/AQMD Assessment Notes

**Asbestos-Containing Material (ACM):** Any building material which contains commercial asbestos in an amount greater than 1%.

**Less than 1% Asbestos:** Materials that are found to contain less than 1% asbestos by standard polarized light microscopy (PLM) may be considered non-asbestos (by EPA/AQMD) if confirmation analysis is performed. To be treated as a non-asbestos material, the EPA and AQMD require analytical verification by PLM Point Count (or better). This verification is required because the standard PLM analysis is not sensitive enough to accurately determine asbestos content at or below 1%. In certain situations, there may be some cost advantages to making this characterization. The decision to do so is evaluated on a case-by-case basis at the client's request.

**Regulated Asbestos-Containing Material (RACM):** RACM includes friable (easily crumbled) ACM, or Category I nonfriable ACM that has or will become friable or that has been subjected to sanding, drilling, grinding, cutting, or abrading, or Category II nonfriable ACM that may become or has become crumbled, pulverized, or reduced to powder.

**Friable:** Materials that can be crumbled, pulverized, or reduced to powder, when dry, by hand pressure.

**Non-Friable:** Materials that **cannot** be easily crumbled, pulverized, or reduced to powder, when dry, by hand pressure. Non-friable materials are categorized by EPA/AQMD as follows:

- *Category I Nonfriable ACM:* Asbestos-containing packings, gaskets, resilient floor coverings, mastics and asphalt roofing products.

- *Category II Nonfriable ACM:* Asbestos-containing material, excluding Category I nonfriable asbestos-containing material, that, when dry, and in its present form, cannot be crumbled, pulverized, or reduced to powder by hand pressure.

## CONCLUSIONS & RECOMMENDATIONS

### Asbestos Removal

In accordance with local, state, and federal asbestos regulations, any ACM that may be impacted during demolition should be removed prior to those destructive activities. In preparation for asbestos removal, ProTech recommends that the following steps be taken:

1. **Scope of Work and Project Specification**
   ProTech will prepare a document (specification) to enable an apples-to-apples asbestos abatement bidding process. The specification will define the abatement scope of work and set forth the guidelines for proper and cost effective asbestos removal. ProTech will price this service upon request.

2. **Bid Review and Contractor Selection**
   ProTech will assist the client or manage the selection of qualified asbestos abatement contractors. ProTech will price this service upon request.

3. **Project Management/Monitoring**
   ProTech will provide quality control oversight and monitoring of the asbestos abatement operation to ensure regulatory compliance. ProTech will price this service upon request.

4. **Project Clearance**
   ProTech will conduct final visual inspections and clearance air monitoring to certify that industry clearance standards are met. ProTech will price this service upon request.

ProTech will provide a fee proposal for additional analysis at the client's request.

### Other Environmental Issues

ProTech's work was limited to an asbestos survey. The potential for environmental conditions other than the presence of asbestos is possible. Other potential hazards that could potentially impact the project include but are not limited to:

1. Mold growth
2. Lead-based paint
3. PCB-containing equipment
4. Mercury containing equipment
5. Chemical supplies

ProTech will provide a fee proposal for additional inspection services at the client's request

## DISCUSSION

### Asbestos & Its Uses

Asbestos is a term that refers to a group of naturally occurring fibrous minerals. Because of their resistance to decay and their remarkable insulating properties, asbestos fibers have been incorporated into thousands of products and materials. Collectively these products are frequently referred to as asbestos-containing materials (ACM). Many types

of ACM have been used in the construction of buildings and homes. ACM types are generally put into one of three classifications, they are:

1. Surfacing materials
Surfacing materials are those products which have been sprayed or trowelled onto ceilings, walls and other structural elements. (E.g. fireproofing, thermal insulation or decoration) Because of the type of mixture used in the construction industry, these materials are commonly *friable*, that is they are easily crushed or reduced to powder form with hand pressure.

2. Thermal systems insulation (TSI)
The insulation applied to mechanical systems, hot water pipes and heating ducts often contains asbestos. Hot water pipes and heating systems are covered with asbestos insulation primarily to prevent heat loss and to protect other nearby surfaces from the hot pipes. Much of this asbestos insulation was manufactured from 1920 to 1972, and it was used in construction until 1978.

3. Miscellaneous
Miscellaneous ACM materials include all asbestos products which cannot be classified as either surfacing material or TSI. These materials are usually non-friable and generally do not release asbestos fibers into the air unless damaged. Products such as floor tile, mastic, roofing material and concrete asbestos products are examples of miscellaneous ACM.

## Asbestos Regulations

The following is a summary of select major state and federal asbestos regulations. These summaries are not intended to be a comprehensive discussion of the specific regulations. In addition, this summary is not an all-inclusive overview of the asbestos regulatory universe.

**Division of Occupational Safety And Health (Cal-OSHA) – Title 8 CCR § 1529**
On July 2, 1996 Cal-OSHA implemented revised general industry and construction asbestos standards which apply to all occupational exposure to asbestos. The new Cal-OSHA construction standard requires owners of buildings built prior to 1981 to presume that a variety of building materials contain asbestos unless they are sampled and proved to not contain asbestos. Employers whose employees work in these same buildings face the same responsibility to either test materials or treat them as ACM.

The standard describes four classes of asbestos-related work: I) removal of asbestos thermal systems insulation and surfacing materials, II) removal of asbestos material which are not thermal systems insulation or surfacing materials, III) repair and maintenance operations where small amounts of asbestos or presumed asbestos (PACM) is likely to be disturbed, and IV) maintenance and custodial activities during which employees contact but do not disturb ACM or PACM and activities to clean up dust, waste, and debris resulting from Class I, II, and III activities. For each class, OSHA specifies the type of training, work practices, air sampling, and personal protection required of the employer and worker. This new regulation is a jobs-based standard. Specific notifications and work practices are required if asbestos will be disturbed.

**EPA's NESHAP Regulation – 40 CFR Part 61, Subpart M**
NESHAP requires building owners to inspect a building for asbestos prior to renovation or demolition. The EPA must be notified in advance of all demolition (whether there is asbestos present or not) and if more than 160 square feet, 260 linear feet, or 35 cubic feet of Regulated Asbestos Containing Materials (RACM) are going to be disturbed during renovation. RACM must be removed before any demolition or renovation work disturbs it. Specific work practices must be followed during the removal of RACM. RACM must be adequately wet when disturbed and must remain wet until placed in leak-proof containers. No visible emissions are allowed during collection, packaging, transportation, or disposal of RACM. Records must be kept regarding the transportation and disposal of RACM.

The federal NESHAP regulation is enforced by the local air quality management district (AQMD). The EPA has "delegated" NESHAP enforcement to these local agencies. Each AQMD has developed an enforcement regulation based on the NESHAP regulation, and in many instances these local regulations are more stringent then the Federal EPA NESHAP regulation.

## EXCLUSIONS & REPORT LIMITATIONS

- This asbestos inspection report has been prepared by ProTech for the exclusive use of ProTech and its client, and not for use by any other party. The investigation and sampling plan discussed in this report may not be appropriate for uses beyond its intended purpose and stated scope. Any use by a third party of any of the information contained in this report shall be at their own risk and shall constitute a release and an agreement to defend and indemnify ProTech from any and all liability in connection therewith whether arising out of ProTech's negligence or otherwise.

- Consulting services performed by ProTech were limited to an asbestos survey. No other services were requested by the client. Lead inspection & assessments, PCB investigations, hazardous material audits, mold/indoor air quality investigations, Phase I & II site assessments, and other general environmental consulting are additional services routinely performed by ProTech. These services were not performed at this site. A general environmental audit may be performed to assess the need for additional environmental consulting services.

- The information contained in this report is limited to those areas and suspect asbestos materials found to be visually accessible through reasonable means. No demolition of building materials was conducted to determine the presence of asbestos in wall cavities, chases or other inaccessible areas. ProTech cannot warrant that this building does not contain ACM in locations that were inaccessible, hidden or unknown. However, a good faith effort was made to conduct a comprehensive survey within the limitations of the stated scope of services. This report presents a complete record of all significant findings, evaluations and sample results.

- ProTech cannot warrant that this building does not contain ACM in locations other than those noted in this report. If suspect asbestos materials are discovered during future repairs, demolition or renovation operations, all general work activities which could impact the discovered suspect ACM should cease until confirmation sampling and/or asbestos abatement options can be assessed.

- ProTech's evaluations do not attempt to forecast or anticipate planned or unforeseen events which may negatively impact ACM condition. All conclusions and recommendations presented herein are based on visible conditions present at the time of inspection. Changes in material condition due to deterioration, unforeseen accidents, or planned events such as renovation or demolition may render the recommendations and conclusions presented in this report obsolete.

- All quantification of ACM is approximate and should not be relied upon for bidding purposes. This report is not represented as, nor intended to be, an asbestos-abatement scope of work or project specification.

## SURVEY METHODOLOGY

### *Inspection & Sample Collection*

A survey of the subject site was conducted to identify and catalog visibly accessible suspect asbestos materials and to develop a sampling strategy for characterizing ACM. Following the initial inspection, samples were collected of suspect asbestos materials from each homogenous sample area. Samples were collected by misting small sample areas with water, then cutting or scraping the sample from the substrate with an appropriate sampling tool. Whenever possible, samples were collected from areas previously damaged or deteriorating. No building systems, components, or structures were demolished to obtain samples of potentially hidden ACM.

Each suspect bulk sample was sealed in its own Zip-lock plastic container and labeled with a unique identification number. Sampling tools were individually cleaned before and after each sample was collected to avoid sample cross contamination. Decontamination was accomplished using single-use, pre-moistened cloths.

Sample information was recorded on ProTech's chain-of-custody form. This form accompanied the samples to a laboratory possessing accreditation from the National Voluntary Laboratory Accreditation Program (NVLAP). Samples were submitted to Forensic Analytical Services, Inc. of Hayward, California.

### *Sample Analysis*

Bulk sample analysis was conducted in accordance with the EPA interim method for determination of asbestos in bulk materials. Samples were first examined by a stereoscopic microscope for determination of homogeneity and preliminary evaluation of composition and presence of fibers. Fibers observed during this examination were then mounted in various refractive index oils and examined in polarized light. During this

examination, all minerals and/or man-made materials were identified and the percentages of each were estimated and/or counted.

## Evaluation of Asbestos Containing Materials

In evaluating each asbestos material, the adhesion of the asbestos material to the underlying substrate, deterioration, and damage from vandalism or any other cause was assessed. Evidence of debris on horizontal surfaces, hanging material, dislodged chunks, scraping, indentations, cracking, etc. would be indicators of poor material condition.

Accidental or deliberate physical contact with asbestos materials can result in damage. Inspectors looked for any evidence that asbestos-containing materials had been disturbed. Indicators such as: finger marks in the material, graffiti, pieces dislodged or missing, scraping marks from movable equipment, or furniture, or an accumulation of suspect asbestos dust or debris on floors, shelves, or other horizontal surfaces indicate poor material condition.

Asbestos-containing materials may deteriorate as a result of either the quality of the installation or environmental factors which affect the cohesive strength of the asbestos-containing material or the strength of the adhesion to the substrate. Deterioration can result in an accumulation of dust on the surface of the asbestos-containing material, delamination of the material, or an adhesive failure of the material where it pulls away from the substrate and either hangs loosely or falls to the floor and exposes the substrate. Inspectors touch the asbestos-containing material to determine if dust is released when the material is lightly brushed or rubbed.

# Appendix 1

## Treated Wood Comments

# Treated Wood Comments
(Report 021-11.2)

As part of ProTech's scope of work, we were asked to evaluate disposal requirements for pressure treated wood. Part of the improvement plan for the San Leandro Water Pollution Plant includes demolition and disposal of retaining walls constructed of pressure treated wood in the compost area.

To assess testing and disposal requirements, we called Altamont Landfill's hazardous materials group. At Altamont we spoke with Ms. Peggy Frittle at (925) 455-73011 and asked her to describe the testing protocol that would be required to dispose of pressure treated wood at her facility.

Ms. Frittle informed us that no testing would necessary to characterize creosote levels.

Pressure treated wood may be disposed of as ordinary construction waste. Pressure treated wood may only be burned in commercial or industrial incinerators or boilers in accordance with Federal and State regulations.

ProTech
Consulting & Engineering
1208 Main Street
Redwood City, CA 94063
Phone: (650) 569-4020 Fax: (650) 569-4023
Environmental Services



Job # 021-MA11

P.O. # 0112-021-59

## General Information

Date: 01-12-11

Job ID: 3000 Davis St. San Leandro

Collected By: EO

Lab: FASI

## Analysis Requested

- ☐ PCM NIOSH 7400
- ☐ TEM
  - ○ AHERA
  - ○ Level 2
  - ○ Bulk Quantitative
  - ○ Bulk Qualitative
- ☒ PLM BULK - EPA/600/R/116
- ☐ Lead
  - ○ AA
  - ○ TTLC
  - ○ STLC
  - ○ TCLP
- ☐ Mold
- ☐ Other

## Turn Around Time

- ☐ Rush
- ☐ 12 hours
- ☒ 24 hours
- ☐ 48 hours
- ☐ 3-5 days
- ☐

## Special Instructions

☐ Prior Positive

Filter Type: ☐ MCE, 0.8 μm, 25mm ☐ MCE, 0.45μm, 25mm ☐ MCE, 0.8μm, 37mm ☐ Other

| Sample # / Date | Sample Type | Sample Protocol | Location / Activity / Material Description | Time On/Off | LPM | Total Min. / Total Vol. / Fibers/Fields | Results |
|---|---|---|---|---|---|---|---|
| # 01-05 | ☐ Post ☐ Area ☐ Background ☐ Personal ☐ Blank ☐ Bulk | ☐ Amb. ☐ ALS ☐ Agg. | Drywall | on / off / pump# | on / end / Ave / Roto# | | |
| # 06 | ☐ Post ☐ Area ☐ Background ☐ Personal ☐ Blank ☐ Bulk | ☐ Amb. ☐ ALS ☐ Agg. | Mastic | on / off / pump# | on / end / Ave / Roto# | | |
| # 07 | ☐ Post ☐ Area ☐ Background ☐ Personal ☐ Blank ☐ Bulk | ☐ Amb. ☐ ALS ☐ Agg. | Base Cove Mastic | on / off / pump# | on / end / Ave / Roto# | | |
| # 08 | ☐ Post ☐ Area ☐ Background ☐ Personal ☐ Blank ☐ Bulk | ☐ Amb. ☐ ALS ☐ Agg. | Mortar | on / off / pump# | on / end / Ave / Roto# | | |
| # 09 | ☐ Post ☐ Area ☐ Background ☐ Personal ☐ Blank ☐ Bulk | ☐ Amb. ☐ ALS ☐ Agg. | | on / off / pump# | on / end / Ave / Roto# | | |
| # 10 | ☐ Post ☐ Area ☐ Background ☐ Personal ☐ Blank ☐ Bulk | ☐ Amb. ☐ ALS ☐ Agg. | | on / off / pump# | on / end / Ave / Roto# | | |
| # 11 | ☐ Post ☐ Area ☐ Background ☐ Personal ☐ Blank ☐ Bulk | ☐ Amb. ☐ ALS ☐ Agg. | | on / off / pump# | on / end / Ave / Roto# | | |
| # 12 | ☐ Post ☐ Area ☐ Background ☐ Personal ☐ Blank ☐ Bulk | ☐ Amb. ☐ ALS ☐ Agg. | | on / off / pump# | on / end / Ave / Roto# | | |
| # 13 | ☐ Post ☐ Area ☐ Background ☐ Personal ☐ Blank ☐ Bulk | ☐ Amb. ☐ ALS ☐ Agg. | White w/ Gray 12 x 12 VFT w/ Yellow Mastic | on / off / pump# | on / end / Ave / Roto# | | |

CHAIN OF CUSTODY

| Relinquished By: | Date/Time | Received By: | Date/Time |
|---|---|---|---|
| E.O. | 01-12-11 4:50PM | Bobby D 4:48 | 1/12/11 |

ProTech
Consulting & Engineering
1208 Main Street
Redwood City, CA 94063
Phone: (650) 569-4020 Fax: (650) 569-4023
Environmental Services


Job # 021-M411
P.O. # 0112-021-59

## General Information

Date: 01-12-11
Job ID: 3000 Davis St. San Leandro
Collected By: [illegible]
Lab: FASI

## Analysis Requested

- ☐ PCM NIOSH 7400
- ☐ TEM
  - ○ AHERA
  - ○ Level 2
  - ○ Bulk Quantitative
  - ○ Bulk Qualitative
- ☒ PLM BULK - EPA/600/R/116
- ☐ Lead
  - ○ AA
  - ○ TTLC
  - ○ STLC
  - ○ TCLP
- ☐ Mold
- ☐ Other

## Turn Around Time

- ☐ Rush
- ☐ 12 hours
- ☒ 24 hours
- ☐ 48 hours
- ☐ 3-5 days
- ☐

## Special Instructions

☐ Prior Positive

Filter Type: ☐ MCE, 0.8 µm, 25mm ☐ MCE, 0.45µm, 25mm ☐ MCE, 0.8µm, 37mm ☐ Other

| Sample # / Date | Sample Type | Sample Protocol | Location / Activity / Material Description | Time On/Off | LPM | Total Min. / Total Vol. / Fibers/Fields | Results |
|---|---|---|---|---|---|---|---|
| #14-15 | ☐ Post ☐ Area ☐ Background ☐ Personal ☐ Blank ☐ Bulk | ☐ Amb. ☐ ALS ☐ Agg. | Light Tan with Dark Tan Streaks 12X12 VFT with Black Mastic | on / off / pump# | on / end / Ave / Roto# | | |
| #16 | ☐ Post ☐ Area ☐ Background ☐ Personal ☐ Blank ☐ Bulk | ☐ Amb. ☐ ALS ☐ Agg. | Pink 12X12 VFT w/ Yellow Mastic over Tan 12X12 VFT w/Black Mastic | on / off / pump# | on / end / Ave / Roto# | | |
| #17 | ☐ Post ☐ Area ☐ Background ☐ Personal ☐ Blank ☐ Bulk | ☐ Amb. ☐ ALS ☐ Agg. | Gray/Tan Speckled Sheetflooring over Tan 12X12 VFT w/Black Mastic | on / off / pump# | on / end / Ave / Roto# | | |
| #18-20 | ☐ Post ☐ Area ☐ Background ☐ Personal ☐ Blank ☐ Bulk | ☐ Amb. ☐ ALS ☐ Agg. | Fissured 2X4 Ceiling Panels | on / off / pump# | on / end / Ave / Roto# | | |
| #21-23 | ☐ Post ☐ Area ☐ Background ☐ Personal ☐ Blank ☐ Bulk | ☐ Amb. ☐ ALS ☐ Agg. | Perforated 2X4 Ceiling Panels | on / off / pump# | on / end / Ave / Roto# | | |
| #24 | ☐ Post ☐ Area ☐ Background ☐ Personal ☐ Blank ☐ Bulk | ☐ Amb. ☐ ALS ☐ Agg. | off white Counter Top | on / off / pump# | on / end / Ave / Roto# | | |
| #25-27 | ☐ Post ☐ Area ☐ Background ☐ Personal ☐ Blank ☐ Bulk | ☐ Amb. ☐ ALS ☐ Agg. | HVAC Joint Tape | on / off / pump# | on / end / Ave / Roto# | | |
| #28-29 | ☐ Post ☐ Area ☐ Background ☐ Personal ☐ Blank ☐ Bulk | ☐ Amb. ☐ ALS ☐ Agg. | Gray/Black HVAC Mastic | on / off / pump# | on / end / Ave / Roto# | | |
| #30 | ☐ Post ☐ Area ☐ Background ☐ Personal ☐ Blank ☐ Bulk | ☐ Amb. ☐ ALS ☐ Agg. | Gry/Black Roofing Mastic | on / off / pump# | on / end / Ave / Roto# | | |

CHAIN OF CUSTODY

| Relinquished By: | Date/Time | Received By: | Date/Time |
|---|---|---|---|
| [illegible] | | Betty D 4:48 | 1/12/11 |
| | | | |

WHITE - RETAIN WITH SAMPLES CANARY - FILE COPY

ProTech
Consulting & Engineering
1208 Main Street
Redwood City, CA 94063
Phone: (650) 569-4020 Fax: (650) 569-4023
Environmental Services



Job # 021-MA11

P.O. # 0112-021-59

## General Information

Date: 01-12-11

Job ID: 3000 Davis St. San Leandro

Collected By: ED

Lab: FASF

## Analysis Requested

- ☐ PCM NIOSH 7400
- ☐ TEM
  - ○ AHERA
  - ○ Level 2
  - ○ Bulk Quantitative
  - ○ Bulk Qualitative
- ☒ PLM BULK - EPA/600/R/118
- ☐ Lead
  - ○ AA
  - ○ TTLC
  - ○ STLC
  - ○ TCLP
- ☐ Mold
- ☐ Other

## Turn Around Time

- ☐ Rush
- ☐ 12 hours
- ☒ 24 hours
- ☐ 48 hours
- ☐ 3-5 days
- ☐ _____

## Special Instructions

☐ Prior Positive

Filter Type: ☐ MCE, 0.8 µm, 25mm ☐ MCE, 0.45µm, 25mm ☐ MCE, 0.8µm, 37mm ☐ Other

| Sample # / Date | Sample Type | Sample Protocol | Location / Activity / Material Description | Time On/Off | LPM | Total Min. / Total Vol. / Fibers/Fields | Results |
|---|---|---|---|---|---|---|---|
| # 31-32 | ☐ Post ☐ Area ☐ Background ☐ Personal ☐ Blank ☐ Bulk | ☐ Amb. ☐ ALS ☐ Agg. | Silver/Black Roofing Mastic | on / off / pump# | on / end / Ave / Roto# | | |
| # 33 | ☐ Post ☐ Area ☐ Background ☐ Personal ☐ Blank ☐ Bulk | ☐ Amb. ☐ ALS ☐ Agg. | Silver/Black Panel Membrane | on / off / pump# | on / end / Ave / Roto# | | |
| # 34-35 | ☐ Post ☐ Area ☐ Background ☐ Personal ☐ Blank ☐ Bulk | ☐ Amb. ☐ ALS ☐ Agg. | Tar & Gravel Roof | on / off / pump# | on / end / Ave / Roto# | | |
| # 36-37 | ☐ Post ☐ Area ☐ Background ☐ Personal ☐ Blank ☐ Bulk | ☐ Amb. ☐ ALS ☐ Agg. | Gray Caulk | on / off / pump# | on / end / Ave / Roto# | | |
| # 38-39 | ☐ Post ☐ Area ☐ Background ☐ Personal ☐ Blank ☐ Bulk | ☐ Amb. ☐ ALS ☐ Agg. | Black Caulk | on / off / pump# | on / end / Ave / Roto# | | |
| # 40-42 | ☐ Post ☐ Area ☐ Background ☐ Personal ☐ Blank ☐ Bulk | ☐ Amb. ☐ ALS ☐ Agg. | Drywall | on / off / pump# | on / end / Ave / Roto# | | |
| # 43 | ☐ Post ☐ Area ☐ Background ☐ Personal ☐ Blank ☐ Bulk | ☐ Amb. ☐ ALS ☐ Agg. | Stucco | on / off / pump# | on / end / Ave / Roto# | | |
| # 44 | ☐ Post ☐ Area ☐ Background ☐ Personal ☐ Blank ☐ Bulk | ☐ Amb. ☐ ALS ☐ Agg. | Black Roofing Mastic | on / off / pump# | on / end / Ave / Roto# | | |
| # 45 | ☐ Post ☐ Area ☐ Background ☐ Personal ☐ Blank ☐ Bulk | ☐ Amb. ☐ ALS ☐ Agg. | White Membrane | on / off / pump# | on / end / Ave / Roto# | | |

CHAIN OF CUSTODY

| Relinquished By: | Date/Time | Received By: | Date/Time |
|---|---|---|---|
| ED | | Betty D 498 | 1/12/11 |

WHITE - RETAIN WITH SAMPLES CANARY - FILE COPY

ProTech
Consulting & Engineering
1208 Main Street
Redwood City, CA 94063
Phone: (650) 569-4020 Fax: (650) 569-4023

Environmental Services



Job # 021-M411

P.O. # 0112-021-55

## General Information

Date: 01-12-11

Job ID: 3000 Davis St. San Leandro

Collected By: EJ

Lab: FASI

## Analysis Requested

- ☐ PCM NIOSH 7400
- ☐ TEM
  - ○ AHERA
  - ○ Level 2
  - ○ Bulk Quantitative
  - ○ Bulk Qualitative
- ☒ PLM BULK - EPA/600/R/116
- ☐ Lead
  - ○ AA
  - ○ TTLC
  - ○ STLC
  - ○ TCLP
- ☐ Mold
- ☐ Other

## Turn Around Time

- ☐ Rush
- ☐ 12 hours
- ☒ 24 hours
- ☐ 48 hours
- ☐ 3-5 days
- ☐

## Special Instructions

☐ Prior Positive

Filter Type: ☐ MCE, 0.8 µm, 25mm ☐ MCE, 0.45µm, 25mm ☐ MCE, 0.8µm, 37mm ☐ Other

| Sample # / Date | Sample Type | Sample Protocol | Location / Activity / Material Description | Time On/Off | LPM | Total Min. / Total Vol. / Fibers/Fields | Results |
|---|---|---|---|---|---|---|---|
| # 46 | ☐ Post ☐ Area ☐ Background ☐ Personal ☐ Blank ☐ Bulk | ☐ Amb. ☐ ALS ☐ Agg. | Parapet Cap | on / off / pump# | on / end / Ave / Roto# | | |
| # 47 | ☐ Post ☐ Area ☐ Background ☐ Personal ☐ Blank ☐ Bulk | ☐ Amb. ☐ ALS ☐ Agg. | Parapet Wall | on / off / pump# | on / end / Ave / Roto# | | |
| # 48-49 | ☐ Post ☐ Area ☐ Background ☐ Personal ☐ Blank ☐ Bulk | ☐ Amb. ☐ ALS ☐ Agg. | ~~Elastomeric~~ Roofing Built up | on / off / pump# | on / end / Ave / Roto# | | |
| # 50-52 | ☐ Post ☐ Area ☐ Background ☐ Personal ☐ Blank ☐ Bulk | ☐ Amb. ☐ ALS ☐ Agg. | Gray Caulk | on / off / pump# | on / end / Ave / Roto# | | |
| # 53 | ☐ Post ☐ Area ☐ Background ☐ Personal ☐ Blank ☐ Bulk | ☐ Amb. ☐ ALS ☐ Agg. | Blue Cementicious Pipe | on / off / pump# | on / end / Ave / Roto# | | |
| # 54 | ☐ Post ☐ Area ☐ Background ☐ Personal ☐ Blank ☐ Bulk | ☐ Amb. ☐ ALS ☐ Agg. | Gray Elastomeric Cover | on / off / pump# | on / end / Ave / Roto# | | |
| # 55-56 | ☐ Post ☐ Area ☐ Background ☐ Personal ☐ Blank ☐ Bulk | ☐ Amb. ☐ ALS ☐ Agg. | Silver Built up Roofing | on / off / pump# | on / end / Ave / Roto# | | |
| # 57-59 | ☐ Post ☐ Area ☐ Background ☐ Personal ☐ Blank ☐ Bulk | ☐ Amb. ☐ ALS ☐ Agg. | Black Lining | on / off / pump# | on / end / Ave / Roto# | | |
| # | ☐ Post ☐ Area ☐ Background ☐ Personal ☐ Blank ☐ Bulk | ☐ Amb. ☐ ALS ☐ Agg. | | on / off / pump# | on / end / Ave / Roto# | | |

CHAIN OF CUSTODY

| Relinquished By: | Date/Time | Received By: | Date/Time |
|---|---|---|---|
| EJ | | Betty D 4:48 | 1/12/11 |
| | | | |

WHITE - RETAIN WITH SAMPLES CANARY - FILE COPY

Forensic Analytical Laboratories

**Final Report**

# Bulk Asbestos Analysis

(EPA Method 600/R-93-116, Visual Area Estimation)

Protech Consulting & Engineers Inc.
Project Manager

1208 Main St.
Redwood City, CA 94063

**Client ID:** 1454
**Report Number:** B144065
**Date Received:** 01/12/11
**Date Analyzed:** 01/13/11
**Date Printed:** 01/13/11
**First Reported:** 01/13/11

**Job ID/Site:** 021-ma11 - 3000 Davis St., San Leandro, PO#0112-021-59

**FALI Job ID:** 1454

**Date(s) Collected:** 01/12/2011

**Total Samples Submitted:** 59
**Total Samples Analyzed:** 59

| Sample ID | Lab Number | Asbestos Type | Percent in Layer | Asbestos Type | Percent in Layer | Asbestos Type | Percent in Layer |
|---|---|---|---|---|---|---|---|
| **1** | 11070428 | | | | | | |
| Layer: White Drywall | | | **ND** | | | | |
| Layer: White Tape | | | **ND** | | | | |
| Layer: Beige Skimcoat/Joint Compound | | Chrysotile | **2 %** | | | | |
| Layer: Paint | | | **ND** | | | | |
| Total Composite Values of Fibrous Components: | | **Asbestos (Trace)** | | | | | |
| Cellulose (20 %) Fibrous Glass (10 %) | | | | | | | |
| **2** | 11070429 | | | | | | |
| Layer: White Drywall | | | **ND** | | | | |
| Layer: White Skimcoat/Joint Compound | | Chrysotile | **2 %** | | | | |
| Layer: White Tape | | | **ND** | | | | |
| Layer: Beige Skimcoat/Joint Compound | | Chrysotile | **2 %** | | | | |
| Layer: Paint | | | **ND** | | | | |
| Total Composite Values of Fibrous Components: | | **Asbestos (Trace)** | | | | | |
| Cellulose (20 %) Fibrous Glass (10 %) | | | | | | | |
| **3** | 11070430 | | | | | | |
| Layer: White Drywall | | | **ND** | | | | |
| Layer: White Skimcoat/Joint Compound | | | **ND** | | | | |
| Layer: White Tape | | | **ND** | | | | |
| Layer: White Skimcoat/Joint Compound | | | **ND** | | | | |
| Layer: Paint | | | **ND** | | | | |
| Total Composite Values of Fibrous Components: | | **Asbestos (ND)** | | | | | |
| Cellulose (20 %) Fibrous Glass (10 %) | | | | | | | |
| **4** | 11070431 | | | | | | |
| Layer: White Drywall | | | **ND** | | | | |
| Layer: Beige Skimcoat/Joint Compound | | Chrysotile | **2 %** | | | | |
| Layer: Pink Woven Material | | | **ND** | | | | |
| Total Composite Values of Fibrous Components: | | **Asbestos (Trace)** | | | | | |
| Cellulose (20 %) Fibrous Glass (10 %) | | | | | | | |



3777 Depot Road, Suite 409, Hayward, CA 94545 / Telephone: (510) 887-8828 (800) 827-FASI / Fax: (510) 887-4218

**Report Number:** B144065
**Client Name:** Protech Consulting & Engineers Inc. **Date Printed:** 01/13/11

| Sample ID | Lab Number | Asbestos Type | Percent in Layer | Asbestos Type | Percent in Layer | Asbestos Type | Percent in Layer |
|---|---|---|---|---|---|---|---|
| **5** | 11070432 | | | | | | |
| Layer: White Drywall | | | **ND** | | | | |
| Layer: Beige Skimcoat/Joint Compound | | Chrysotile | **2 %** | | | | |
| Layer: White Woven Material | | | **ND** | | | | |
| Total Composite Values of Fibrous Components: | | **Asbestos (Trace)** | | | | | |
| Cellulose (20 %) Fibrous Glass (10 %) | | | | | | | |
| **6** | 11070433 | | | | | | |
| Layer: Yellow Mastic | | | **ND** | | | | |
| Total Composite Values of Fibrous Components: | | **Asbestos (ND)** | | | | | |
| Cellulose (Trace) | | | | | | | |
| **7** | 11070434 | | | | | | |
| Layer: White Mastic | | | **ND** | | | | |
| Total Composite Values of Fibrous Components: | | **Asbestos (ND)** | | | | | |
| Cellulose (Trace) | | | | | | | |
| **8** | 11070435 | | | | | | |
| Layer: Beige Non-Fibrous Material | | | **ND** | | | | |
| Layer: Tan Mastic | | | **ND** | | | | |
| Total Composite Values of Fibrous Components: | | **Asbestos (ND)** | | | | | |
| Cellulose (Trace) | | | | | | | |
| **9** | 11070436 | | | | | | |
| Layer: White Mortar | | | **ND** | | | | |
| Total Composite Values of Fibrous Components: | | **Asbestos (ND)** | | | | | |
| **10** | 11070437 | | | | | | |
| Layer: Black Mortar | | | **ND** | | | | |
| Total Composite Values of Fibrous Components: | | **Asbestos (ND)** | | | | | |
| **11** | 11070438 | | | | | | |
| Layer: Grey Mortar | | | **ND** | | | | |
| Total Composite Values of Fibrous Components: | | **Asbestos (ND)** | | | | | |
| **12** | 11070439 | | | | | | |
| Layer: White Mortar | | | **ND** | | | | |
| Total Composite Values of Fibrous Components: | | **Asbestos (ND)** | | | | | |
| **13** | 11070440 | | | | | | |
| Layer: White Tile | | | **ND** | | | | |
| Layer: Yellow Mastic | | | **ND** | | | | |
| Total Composite Values of Fibrous Components: | | **Asbestos (ND)** | | | | | |
| Cellulose (Trace) | | | | | | | |



3777 Depot Road, Suite 409, Hayward, CA 94545 / Telephone: (510) 887-8828 (800) 827-FASI / Fax: (510) 887-4218

**Report Number:** B144065
**Client Name:** Protech Consulting & Engineers Inc. **Date Printed:** 01/13/11

| Sample ID | Lab Number | Asbestos Type | Percent in Layer | Asbestos Type | Percent in Layer | Asbestos Type | Percent in Layer |
|---|---|---|---|---|---|---|---|
| **14** | 11070441 | | | | | | |
| Layer: Light Tan Tile | | | **ND** | | | | |
| Layer: Black Mastic | | Chrysotile | **5 %** | | | | |
| Layer: White Non-Fibrous Material | | | **ND** | | | | |
| Total Composite Values of Fibrous Components: **Asbestos (Trace)** | | | | | | | |
| Cellulose (Trace) | | | | | | | |
| **15** | 11070442 | | | | | | |
| Layer: Light Tan Tile | | | **ND** | | | | |
| Layer: Black Mastic | | Chrysotile | **5 %** | | | | |
| Layer: White Non-Fibrous Material | | | **ND** | | | | |
| Total Composite Values of Fibrous Components: **Asbestos (Trace)** | | | | | | | |
| Cellulose (Trace) | | | | | | | |
| **16** | 11070443 | | | | | | |
| Layer: Pink Tile | | | **ND** | | | | |
| Layer: Yellow Mastic | | | **ND** | | | | |
| Layer: White Tile | | | **ND** | | | | |
| Layer: Black Mastic | | Chrysotile | **5 %** | | | | |
| Total Composite Values of Fibrous Components: **Asbestos (Trace)** | | | | | | | |
| Cellulose (Trace) | | | | | | | |
| Comment: Bulk complex sample. | | | | | | | |
| **17** | 11070444 | | | | | | |
| Layer: Tan Sheet Flooring | | | **ND** | | | | |
| Layer: Fibrous Backing | | | **ND** | | | | |
| Layer: Yellow Mastic | | | **ND** | | | | |
| Layer: Tan Tile | | | **ND** | | | | |
| Layer: Black Mastic | | | **ND** | | | | |
| Total Composite Values of Fibrous Components: **Asbestos (ND)** | | | | | | | |
| Cellulose (20 %) Fibrous Glass (5 %) Synthetic (10 %) | | | | | | | |
| Comment: Bulk complex sample. | | | | | | | |
| **18** | 11070445 | | | | | | |
| Layer: Beige Fibrous Material | | | **ND** | | | | |
| Layer: Paint | | | **ND** | | | | |
| Total Composite Values of Fibrous Components: **Asbestos (ND)** | | | | | | | |
| Cellulose (35 %) Fibrous Glass (45 %) | | | | | | | |
| **19** | 11070446 | | | | | | |
| Layer: Beige Fibrous Material | | | **ND** | | | | |
| Layer: Paint | | | **ND** | | | | |
| Total Composite Values of Fibrous Components: **Asbestos (ND)** | | | | | | | |
| Cellulose (35 %) Fibrous Glass (45 %) | | | | | | | |
| **20** | 11070447 | | | | | | |
| Layer: Beige Fibrous Material | | | **ND** | | | | |
| Layer: Paint | | | **ND** | | | | |
| Total Composite Values of Fibrous Components: **Asbestos (ND)** | | | | | | | |
| Cellulose (35 %) Fibrous Glass (45 %) | | | | | | | |


3777 Depot Road, Suite 409, Hayward, CA 94545 / Telephone: (510) 887-8828 (800) 827-FASI / Fax: (510) 887-4218

**Report Number:** B144065
**Client Name:** Protech Consulting & Engineers Inc. **Date Printed:** 01/13/11

| Sample ID | Lab Number | Asbestos Type | Percent in Layer | Asbestos Type | Percent in Layer | Asbestos Type | Percent in Layer |
|---|---|---|---|---|---|---|---|
| **21** | 11070448 | | | | | | |
| Layer: Beige Fibrous Material | | | **ND** | | | | |
| Layer: Paint | | | **ND** | | | | |
| Total Composite Values of Fibrous Components: | | **Asbestos (ND)** | | | | | |
| Cellulose (35 %) Fibrous Glass (45 %) | | | | | | | |
| **22** | 11070449 | | | | | | |
| Layer: Beige Fibrous Material | | | **ND** | | | | |
| Layer: Paint | | | **ND** | | | | |
| Total Composite Values of Fibrous Components: | | **Asbestos (ND)** | | | | | |
| Cellulose (35 %) Fibrous Glass (45 %) | | | | | | | |
| **23** | 11070450 | | | | | | |
| Layer: Beige Fibrous Material | | | **ND** | | | | |
| Layer: Paint | | | **ND** | | | | |
| Total Composite Values of Fibrous Components: | | **Asbestos (ND)** | | | | | |
| Cellulose (35 %) Fibrous Glass (45 %) | | | | | | | |
| **24** | 11070451 | | | | | | |
| Layer: White Non-Fibrous Material | | | **ND** | | | | |
| Total Composite Values of Fibrous Components: | | **Asbestos (ND)** | | | | | |
| Cellulose (Trace) | | | | | | | |
| **25** | 11070452 | | | | | | |
| Layer: White Tape | | | **ND** | | | | |
| Total Composite Values of Fibrous Components: | | **Asbestos (ND)** | | | | | |
| Cellulose (95 %) | | | | | | | |
| **26** | 11070453 | | | | | | |
| Layer: White Tape | | | **ND** | | | | |
| Total Composite Values of Fibrous Components: | | **Asbestos (ND)** | | | | | |
| Cellulose (95 %) | | | | | | | |
| **27** | 11070454 | | | | | | |
| Layer: White Tape | | | **ND** | | | | |
| Total Composite Values of Fibrous Components: | | **Asbestos (ND)** | | | | | |
| Cellulose (95 %) | | | | | | | |
| **28** | 11070455 | | | | | | |
| Layer: Grey/Black Mastic | | | **ND** | | | | |
| Total Composite Values of Fibrous Components: | | **Asbestos (ND)** | | | | | |
| Cellulose (Trace) Synthetic (15 %) | | | | | | | |
| **29** | 11070456 | | | | | | |
| Layer: Grey/Black Mastic | | | **ND** | | | | |
| Total Composite Values of Fibrous Components: | | **Asbestos (ND)** | | | | | |
| Cellulose (10 %) Synthetic (15 %) | | | | | | | |
| **30** | 11070457 | | | | | | |
| Layer: Black Mastic | | | **ND** | | | | |
| Total Composite Values of Fibrous Components: | | **Asbestos (ND)** | | | | | |
| Cellulose (20 %) Synthetic (10 %) | | | | | | | |


3777 Depot Road, Suite 409, Hayward, CA 94545 / Telephone: (510) 887-8828 (800) 827-FASI / Fax: (510) 887-4218

**Report Number:** B144065
**Client Name:** Protech Consulting & Engineers Inc. **Date Printed:** 01/13/11

| Sample ID | Lab Number | Asbestos Type | Percent in Layer | Asbestos Type | Percent in Layer | Asbestos Type | Percent in Layer |
|---|---|---|---|---|---|---|---|
| **31** | 11070458 | | | | | | |
| Layer: Black Mastic | | Chrysotile | **10 %** | | | | |
| Layer: Silver Paint | | | **ND** | | | | |
| Total Composite Values of Fibrous Components: **Asbestos (10%)** | | | | | | | |
| Cellulose (Trace) | | | | | | | |
| **32** | 11070459 | | | | | | |
| Layer: Black Mastic | | Chrysotile | **10 %** | | | | |
| Layer: Silver Paint | | | **ND** | | | | |
| Total Composite Values of Fibrous Components: **Asbestos (10%)** | | | | | | | |
| Cellulose (Trace) | | | | | | | |
| **33** | 11070460 | | | | | | |
| Layer: Silver Paint | | | **ND** | | | | |
| Layer: Black Tar | | | **ND** | | | | |
| Layer: Black Felt | | | **ND** | | | | |
| Layer: Black Tar | | | **ND** | | | | |
| Layer: Black Felt | | | **ND** | | | | |
| Layer: Black Tar | | | **ND** | | | | |
| Layer: Black Felt | | | **ND** | | | | |
| Total Composite Values of Fibrous Components: **Asbestos (ND)** | | | | | | | |
| Cellulose (5 %) Fibrous Glass (10 %) Synthetic (35 %) | | | | | | | |
| Comment: Bulk complex sample. | | | | | | | |
| **34** | 11070461 | | | | | | |
| Layer: Black Tar Stones | | | **ND** | | | | |
| Layer: Black Felt | | | **ND** | | | | |
| Layer: Black Tar | | | **ND** | | | | |
| Layer: Black Felt | | | **ND** | | | | |
| Layer: Black Tar | | | **ND** | | | | |
| Layer: Black Felt | | | **ND** | | | | |
| Layer: Tan Fibrous Material | | | **ND** | | | | |
| Layer: Yellow Foam | | | **ND** | | | | |
| Total Composite Values of Fibrous Components: **Asbestos (ND)** | | | | | | | |
| Cellulose (10 %) Fibrous Glass (45 %) | | | | | | | |
| **35** | 11070462 | | | | | | |
| Layer: Black Tar Stones | | | **ND** | | | | |
| Layer: Black Felt | | | **ND** | | | | |
| Layer: Black Tar | | | **ND** | | | | |
| Layer: Black Felt | | | **ND** | | | | |
| Layer: Black Tar | | | **ND** | | | | |
| Layer: Black Felt | | | **ND** | | | | |
| Layer: Tan Fibrous Material | | | **ND** | | | | |
| Layer: Yellow Foam | | | **ND** | | | | |
| Total Composite Values of Fibrous Components: **Asbestos (ND)** | | | | | | | |
| Cellulose (10 %) Fibrous Glass (45 %) | | | | | | | |


3777 Depot Road, Suite 409, Hayward, CA 94545 / Telephone: (510) 887-8828 (800) 827-FASI / Fax: (510) 887-4218

**Client Name:** Protech Consulting & Engineers Inc.

**Report Number:** B144065
**Date Printed:** 01/13/11

| Sample ID | Lab Number | Asbestos Type | Percent in Layer | Asbestos Type | Percent in Layer | Asbestos Type | Percent in Layer |
|---|---|---|---|---|---|---|---|
| **36** | 11070463 | | | | | | |
| Layer: Grey Non-Fibrous Material | | Chrysotile | **2 %** | | | | |
| Layer: Paint | | | **ND** | | | | |
| Total Composite Values of Fibrous Components: **Asbestos (2%)** Cellulose (Trace) | | | | | | | |
| **37** | 11070464 | | | | | | |
| Layer: Grey Non-Fibrous Material | | Chrysotile | **2 %** | | | | |
| Layer: Paint | | | **ND** | | | | |
| Total Composite Values of Fibrous Components: **Asbestos (2%)** Cellulose (Trace) | | | | | | | |
| **38** | 11070465 | | | | | | |
| Layer: Black Non-Fibrous Material | | | **ND** | | | | |
| Total Composite Values of Fibrous Components: **Asbestos (ND)** Cellulose (Trace) | | | | | | | |
| **39** | 11070466 | | | | | | |
| Layer: Black Non-Fibrous Material | | | **ND** | | | | |
| Total Composite Values of Fibrous Components: **Asbestos (ND)** Cellulose (Trace) | | | | | | | |
| **40** | 11070467 | | | | | | |
| Layer: White Drywall | | | **ND** | | | | |
| Layer: Off-White Skimcoat/Joint Compound | | Chrysotile | **2 %** | | | | |
| Layer: White Tape | | | **ND** | | | | |
| Layer: White Skimcoat/Joint Compound | | | **ND** | | | | |
| Layer: Paint | | | **ND** | | | | |
| Total Composite Values of Fibrous Components: **Asbestos (Trace)** Cellulose (20 %) Fibrous Glass (10 %) | | | | | | | |
| **41** | 11070468 | | | | | | |
| Layer: White Drywall | | | **ND** | | | | |
| Layer: Paint | | | **ND** | | | | |
| Total Composite Values of Fibrous Components: **Asbestos (ND)** Cellulose (20 %) Fibrous Glass (10 %) | | | | | | | |
| **42** | 11070469 | | | | | | |
| Layer: White Drywall | | | **ND** | | | | |
| Layer: Paint | | | **ND** | | | | |
| Total Composite Values of Fibrous Components: **Asbestos (ND)** Cellulose (20 %) Fibrous Glass (10 %) | | | | | | | |
| **43** | 11070470 | | | | | | |
| Layer: Grey Cementitious Material | | | **ND** | | | | |
| Layer: White Cementitious Material | | | **ND** | | | | |
| Layer: Paint | | | **ND** | | | | |
| Total Composite Values of Fibrous Components: **Asbestos (ND)** Cellulose (Trace) | | | | | | | |



3777 Depot Road, Suite 409, Hayward, CA 94545 / Telephone: (510) 887-8828 (800) 827-FASI / Fax: (510) 887-4218

**Report Number:** B144065
**Client Name:** Protech Consulting & Engineers Inc. **Date Printed:** 01/13/11

| Sample ID | Lab Number | Asbestos Type | Percent in Layer | Asbestos Type | Percent in Layer | Asbestos Type | Percent in Layer |
|---|---|---|---|---|---|---|---|
| **44** | 11070471 | | | | | | |
| Layer: Black Mastic | | | **ND** | | | | |
| Total Composite Values of Fibrous Components: **Asbestos (ND)** Cellulose (20 %) Synthetic (5 %) | | | | | | | |
| **45** | 11070472 | | | | | | |
| Layer: Black Non-Fibrous Material | | | **ND** | | | | |
| Layer: White Non-Fibrous Material | | | **ND** | | | | |
| Total Composite Values of Fibrous Components: **Asbestos (ND)** Cellulose (Trace) | | | | | | | |
| **46** | 11070473 | | | | | | |
| Layer: Black Semi-Fibrous Tar | | Chrysotile | **10 %** | | | | |
| Layer: White Coating | | | **ND** | | | | |
| Total Composite Values of Fibrous Components: **Asbestos (9%)** Cellulose (Trace) | | | | | | | |
| **47** | 11070474 | | | | | | |
| Layer: Black Non-Fibrous Material | | | **ND** | | | | |
| Layer: White Non-Fibrous Material | | | **ND** | | | | |
| Total Composite Values of Fibrous Components: **Asbestos (ND)** Cellulose (Trace) | | | | | | | |
| **48** | 11070475 | | | | | | |
| Layer: Black Tar | | | **ND** | | | | |
| Layer: Stones | | | **ND** | | | | |
| Total Composite Values of Fibrous Components: **Asbestos (ND)** Cellulose (Trace) | | | | | | | |
| **49** | 11070476 | | | | | | |
| Layer: Black Tar | | | **ND** | | | | |
| Layer: Stones | | | **ND** | | | | |
| Total Composite Values of Fibrous Components: **Asbestos (ND)** Cellulose (Trace) | | | | | | | |
| **50** | 11070477 | | | | | | |
| Layer: Grey Non-Fibrous Material | | | **ND** | | | | |
| Total Composite Values of Fibrous Components: **Asbestos (ND)** Cellulose (Trace) | | | | | | | |
| **51** | 11070478 | | | | | | |
| Layer: Grey Non-Fibrous Material | | | **ND** | | | | |
| Total Composite Values of Fibrous Components: **Asbestos (ND)** Cellulose (Trace) | | | | | | | |
| **52** | 11070479 | | | | | | |
| Layer: Black Semi-Fibrous Tar | | Chrysotile | **10 %** | | | | |
| Layer: White Material | | | **ND** | | | | |
| Total Composite Values of Fibrous Components: **Asbestos (5%)** Cellulose (Trace) | | | | | | | |


3777 Depot Road, Suite 409, Hayward, CA 94545 / Telephone: (510) 887-8828 (800) 827-FASI / Fax: (510) 887-4218

**Report Number:** B144065
**Client Name:** Protech Consulting & Engineers Inc. **Date Printed:** 01/13/11

| Sample ID | Lab Number | Asbestos Type | Percent in Layer | Asbestos Type | Percent in Layer | Asbestos Type | Percent in Layer |
|---|---|---|---|---|---|---|---|
| **53** | 11070480 | | | | | | |
| Layer: Red Non-Fibrous Material | | | **ND** | | | | |
| Layer: Blue Non-Fibrous Material | | | **ND** | | | | |
| Total Composite Values of Fibrous Components: | | **Asbestos (ND)** | | | | | |
| Cellulose (Trace) | | | | | | | |
| **54** | 11070481 | | | | | | |
| Layer: Yellow Foam | | | **ND** | | | | |
| Layer: Grey Coating | | | **ND** | | | | |
| Total Composite Values of Fibrous Components: | | **Asbestos (ND)** | | | | | |
| **55** | 11070482 | | | | | | |
| Layer: Silver Paint | | | **ND** | | | | |
| Layer: Black Tar | | | **ND** | | | | |
| Layer: Black Felt | | | **ND** | | | | |
| Layer: Black Tar | | | **ND** | | | | |
| Layer: Black Felt | | | **ND** | | | | |
| Layer: Black Tar | | | **ND** | | | | |
| Layer: Black Felt | | | **ND** | | | | |
| Total Composite Values of Fibrous Components: | | **Asbestos (ND)** | | | | | |
| Cellulose (10 %) Fibrous Glass (45 %) | | | | | | | |
| Comment: Bulk complex sample. | | | | | | | |
| **56** | 11070483 | | | | | | |
| Layer: Black Semi-Fibrous Tar | | Chrysotile | **10 %** | | | | |
| Layer: Silver Paint | | | **ND** | | | | |
| Total Composite Values of Fibrous Components: | | **Asbestos (10%)** | | | | | |
| Cellulose (Trace) | | | | | | | |
| **57** | 11070484 | | | | | | |
| Layer: Black Non-Fibrous Material | | | **ND** | | | | |
| Total Composite Values of Fibrous Components: | | **Asbestos (ND)** | | | | | |
| Cellulose (Trace) | | | | | | | |
| **58** | 11070485 | | | | | | |
| Layer: Black Non-Fibrous Material | | | **ND** | | | | |
| Total Composite Values of Fibrous Components: | | **Asbestos (ND)** | | | | | |
| Cellulose (Trace) | | | | | | | |
| **59** | 11070486 | | | | | | |
| Layer: Black Non-Fibrous Material | | | **ND** | | | | |
| Total Composite Values of Fibrous Components: | | **Asbestos (ND)** | | | | | |
| Cellulose (Trace) | | | | | | | |


3777 Depot Road, Suite 409, Hayward, CA 94545 / Telephone: (510) 887-8828 (800) 827-FASI / Fax: (510) 887-4218

**Report Number:** B144065
**Client Name:** Protech Consulting & Engineers Inc. **Date Printed:** 01/13/11

| Sample ID | Lab Number | Asbestos Type | Percent in Layer | Asbestos Type | Percent in Layer | Asbestos Type | Percent in Layer |
|---|---|---|---|---|---|---|---|

James Flores, Laboratory Supervisor, Hayward Laboratory

Note: Limit of Quantification ('LOQ') = 1%. 'Trace' denotes the presence of asbestos below the LOQ. 'ND' = 'None Detected'.

Analytical results and reports are generated by Forensic Analytical Laboratories Inc. (FALI) at the request of and for the exclusive use of the person or entity (client) named on such report. Results, reports or copies of same will not be released by FALI to any third party without prior written request from client. This report applies only to the sample(s) tested. Supporting laboratory documentation is available upon request. This report must not be reproduced except in full, unless approved by FALI. The client is solely responsible for the use and interpretation of test results and reports requested from FALI. Forensic Analytical Laboratories Inc. is not able to assess the degree of hazard resulting from materials analyzed. FALI reserves the right to dispose of all samples after a period of thirty (30) days, according to all state and federal guidelines, unless otherwise specified. All samples were received in acceptable condition unless otherwise noted.



3777 Depot Road, Suite 409, Hayward, CA 94545 / Telephone: (510) 887-8828 (800) 827-FASI / Fax: (510) 887-4218

ProTech
Consulting & Engineering
1208 Main Street
Redwood City, CA 94063
Phone: (650) 569-4020 Fax: (650) 569-4023
Environmental Services



Job # 021-MA11.2

P.O. # 301-021-14

## General Information

Date: 03-01-11

Job ID: San Leandro Water Pollution Control Plant

Collected By: ED

Lab: FAST

## Analysis Requested

- ☐ PCM NIOSH 7400
- ☐ TEM
  - ○ AHERA
  - ○ Level 2
  - ○ Bulk Quantitative
  - ○ Bulk Qualitative
- ☒ PLM BULK - EPA/600/R/116
- ☐ Lead
  - ○ AA
  - ○ TTLC
  - ○ STLC
  - ○ TCLP
- ☐ Mold
- ☐ Other

## Turn Around Time

- ☐ Rush
- ☐ 12 hours
- ☒ 24 hours
- ☐ 48 hours
- ☐ 3-5 days
- ☐

## Special Instructions

☐ Prior Positive

Filter Type: ☐ MCE, 0.8 μm, 25mm ☐ MCE, 0.45μm, 25mm ☐ MCE, 0.8μm, 37mm ☐ Other

| Sample # / Date | Sample Type | Sample Protocol | Location / Activity / Material Description | Time On/Off | LPM | Total Min. / Total Vol. / Fibers/Fields | Results |
|---|---|---|---|---|---|---|---|
| # 01-03 | ☐ Post ☐ Area ☐ Background ☐ Personal ☐ Blank ☐ Bulk | ☐ Amb. ☐ ALS ☐ Agg. | Tank liner | on / off / pump# | on / end / Ave / Roto# | | |
| # 04 | ☐ Post ☐ Area ☐ Background ☐ Personal ☐ Blank ☐ Bulk | ☐ Amb. ☐ ALS ☐ Agg. | Pipe Coating | on / off / pump# | on / end / Ave / Roto# | | |
| # 05 | ☐ Post ☐ Area ☐ Background ☐ Personal ☐ Blank ☐ Bulk | ☐ Amb. ☐ ALS ☐ Agg. | | on / off / pump# | on / end / Ave / Roto# | | |
| # 06 | ☐ Post ☐ Area ☐ Background ☐ Personal ☐ Blank ☐ Bulk | ☐ Amb. ☐ ALS ☐ Agg. | | on / off / pump# | on / end / Ave / Roto# | | |
| # 07-09 | ☐ Post ☐ Area ☐ Background ☐ Personal ☐ Blank ☐ Bulk | ☐ Amb. ☐ ALS ☐ Agg. | Tank liner | on / off / pump# | on / end / Ave / Roto# | | |
| # 10 | ☐ Post ☐ Area ☐ Background ☐ Personal ☐ Blank ☐ Bulk | ☐ Amb. ☐ ALS ☐ Agg. | Pipe Coating | on / off / pump# | on / end / Ave / Roto# | | |
| # 11-13 | ☐ Post ☐ Area ☐ Background ☐ Personal ☐ Blank ☐ Bulk | ☐ Amb. ☐ ALS ☐ Agg. | Mastic | on / off / pump# | on / end / Ave / Roto# | | |
| # | ☐ Post ☐ Area ☐ Background ☐ Personal ☐ Blank ☐ Bulk | ☐ Amb. ☐ ALS ☐ Agg. | | on / off / pump# | on / end / Ave / Roto# | | |
| # | ☐ Post ☐ Area ☐ Background ☐ Personal ☐ Blank ☐ Bulk | ☐ Amb. ☐ ALS ☐ Agg. | | on / off / pump# | on / end / Ave / Roto# | | |

CHAIN OF CUSTODY

| Relinquished By: | Date/Time | Received By: | Date/Time |
|---|---|---|---|
| ED | | BP | 3/1/11 1300pm |
| | | | |

WHITE • RETAIN WITH SAMPLES CANARY • FILE COPY

Forensic Analytical Laboratories

**Final Report**

# Bulk Asbestos Analysis

(EPA Method 600/R-93-116, Visual Area Estimation)

Protech Consulting & Engineers Inc.
Project Manager

1208 Main St.
Redwood City, CA 94063

**Client ID:** 1454
**Report Number:** B145916
**Date Received:** 03/01/11
**Date Analyzed:** 03/02/11
**Date Printed:** 03/02/11
**First Reported:** 03/02/11

**Job ID/Site:** 021-MA11.2 - San Leandro Water Pollution Control Plant

**FALI Job ID:** 1454

**Date(s) Collected:** 03/1/11

**Total Samples Submitted:** 13
**Total Samples Analyzed:** 13

| Sample ID | Lab Number | Asbestos Type | Percent in Layer | Asbestos Type | Percent in Layer | Asbestos Type | Percent in Layer |
|---|---|---|---|---|---|---|---|
| **01** | 11085270 | | | | | | |
| Layer: Black Tar | | | **ND** | | | | |
| Layer: Paint | | | **ND** | | | | |
| Total Composite Values of Fibrous Components: | | **Asbestos (ND)** | | | | | |
| Cellulose (Trace) | | | | | | | |
| **02** | 11085271 | | | | | | |
| Layer: Black Tar | | | **ND** | | | | |
| Layer: Paint | | | **ND** | | | | |
| Total Composite Values of Fibrous Components: | | **Asbestos (ND)** | | | | | |
| Cellulose (Trace) | | | | | | | |
| **03** | 11085272 | | | | | | |
| Layer: Black Tar | | | **ND** | | | | |
| Layer: Paint | | | **ND** | | | | |
| Total Composite Values of Fibrous Components: | | **Asbestos (ND)** | | | | | |
| Cellulose (Trace) | | | | | | | |
| **04** | 11085273 | | | | | | |
| Layer: Paint | | | **ND** | | | | |
| Total Composite Values of Fibrous Components: | | **Asbestos (ND)** | | | | | |
| Cellulose (Trace) | | | | | | | |
| **05** | 11085274 | | | | | | |
| Layer: Black Tar | | | **ND** | | | | |
| Layer: Paint | | | **ND** | | | | |
| Total Composite Values of Fibrous Components: | | **Asbestos (ND)** | | | | | |
| Cellulose (Trace) | | | | | | | |
| **06** | 11085275 | | | | | | |
| Layer: Black Semi-Fibrous Tar | | Chrysotile | **10 %** | | | | |
| Total Composite Values of Fibrous Components: | | **Asbestos (10%)** | | | | | |
| Cellulose (Trace) | | | | | | | |
| **07** | 11085276 | | | | | | |
| Layer: Black Tar | | | **ND** | | | | |
| Layer: Paint | | | **ND** | | | | |
| Total Composite Values of Fibrous Components: | | **Asbestos (ND)** | | | | | |
| Cellulose (Trace) | | | | | | | |



3777 Depot Road, Suite 409, Hayward, CA 94545 / Telephone: (510) 887-8828 (800) 827-FASI / Fax: (510) 887-4218

**Report Number:** B145916
**Client Name:** Protech Consulting & Engineers Inc. **Date Printed:** 03/02/11

| Sample ID | Lab Number | Asbestos Type | Percent in Layer | Asbestos Type | Percent in Layer | Asbestos Type | Percent in Layer |
|---|---|---|---|---|---|---|---|
| **08** | 11085277 | | | | | | |
| Layer: Black Tar | | | **ND** | | | | |
| Layer: Paint | | | **ND** | | | | |
| Total Composite Values of Fibrous Components: | | **Asbestos (ND)** | | | | | |
| Cellulose (Trace) | | | | | | | |
| **09** | 11085278 | | | | | | |
| Layer: Black Tar | | | **ND** | | | | |
| Layer: Paint | | | **ND** | | | | |
| Total Composite Values of Fibrous Components: | | **Asbestos (ND)** | | | | | |
| Cellulose (Trace) | | | | | | | |
| **10** | 11085279 | | | | | | |
| Layer: Paint | | | **ND** | | | | |
| Total Composite Values of Fibrous Components: | | **Asbestos (ND)** | | | | | |
| Cellulose (Trace) | | | | | | | |
| **11** | 11085280 | | | | | | |
| Layer: Tan Mastic | | | **ND** | | | | |
| Total Composite Values of Fibrous Components: | | **Asbestos (ND)** | | | | | |
| Cellulose (Trace) | | | | | | | |
| **12** | 11085281 | | | | | | |
| Layer: Tan Mastic | | | **ND** | | | | |
| Total Composite Values of Fibrous Components: | | **Asbestos (ND)** | | | | | |
| Cellulose (Trace) | | | | | | | |
| **13** | 11085282 | | | | | | |
| Layer: Tan Mastic | | | **ND** | | | | |
| Total Composite Values of Fibrous Components: | | **Asbestos (ND)** | | | | | |
| Cellulose (Trace) | | | | | | | |

James Flores, Laboratory Supervisor, Hayward Laboratory

Note: Limit of Quantification ('LOQ') = 1%. 'Trace' denotes the presence of asbestos below the LOQ. 'ND' = 'None Detected'.

Analytical results and reports are generated by Forensic Analytical Laboratories Inc. (FALI) at the request of and for the exclusive use of the person or entity (client) named on such report. Results, reports or copies of same will not be released by FALI to any third party without prior written request from client. This report applies only to the sample(s) tested. Supporting laboratory documentation is available upon request. This report must not be reproduced except in full, unless approved by FALI. The client is solely responsible for the use and interpretation of test results and reports requested from FALI. Forensic Analytical Laboratories Inc. is not able to assess the degree of hazard resulting from materials analyzed. FALI reserves the right to dispose of all samples after a period of thirty (30) days, according to all state and federal guidelines, unless otherwise specified. All samples were received in acceptable condition unless otherwise noted.



3777 Depot Road, Suite 409, Hayward, CA 94545 / Telephone: (510) 887-8828 (800) 827-FASI / Fax: (510) 887-4218

# Water Pollution Control Plant
# Control Building
# Evacuation Routes

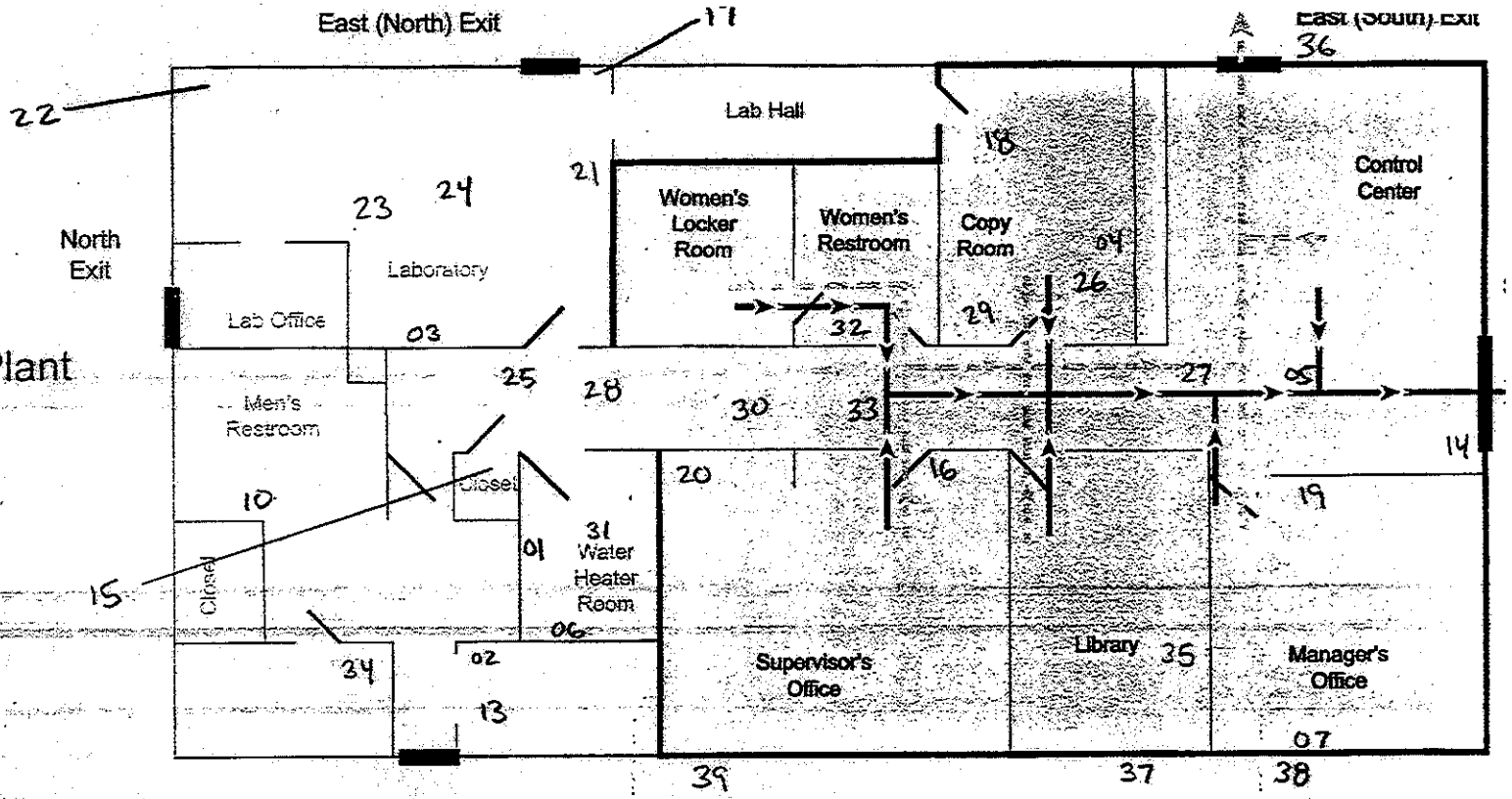


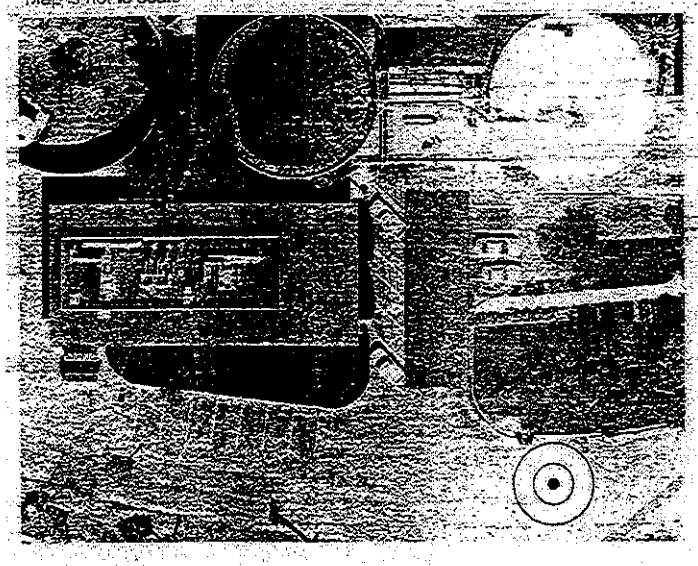

Asbestos Sample Locations

**Women's Locker Room, Women's Restroom, Copy Room, Control Center, Manager's Office, Library, Supervisor's Office**

Assembly Location in Parking Lot

Primary Evacuation Route

Secondary Evacuation Route

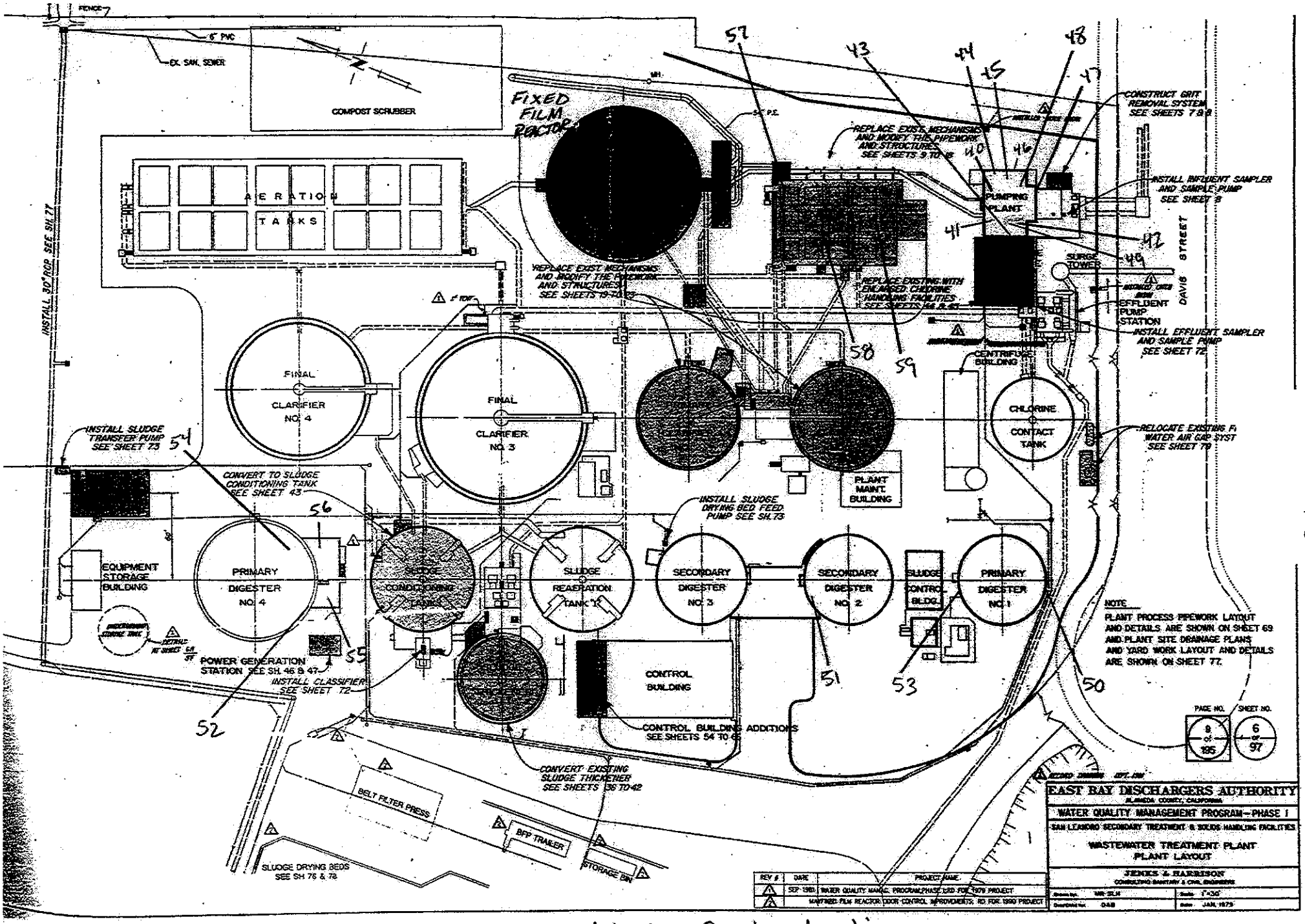


Asbestos Sample locations

## SECTION 16710

## FIRE ALARM AND SMOKE DETECTION SYSTEM

### PART 1 GENERAL

### 1.01 SUMMARY

A. Section includes requirements for:
   1. Design, supply and installation of a complete addressable type fire alarm system, including:
      a. Initiating devices.
      b. Notification appliances.
      c. Controls.
      d. Supervisory devices.
      e. Programming.

B. Related sections:
   1. The Contract Documents are complementary; what is called for by one is as binding as if called for by all.
   2. It is the CONTRACTOR's responsibility for scheduling and coordinating the Work of subcontractors, suppliers, and other individuals or entities performing or furnishing any of CONTRACTOR's Work.
   3. The following sections are related to the Work described in this Section. This list of related sections is provided for convenience only and is not intended to excuse or otherwise diminish the duty of the CONTRACTOR to see that the completed Work complies accurately with the Contract Documents.
      a. Section 01330 - Submittal Procedures.
      b. Section 16050 - Common Work Results for Electrical.
      c. Section 16123 - 600 Volt or Less Wires and Cables.

C. Utilize a single Fire Alarm System Supplier (FASS) to design, furnish, and install all materials, equipment, labor, and services required to achieve a fully integrated and operational fire alarm system, in complete compliance with the NFPA Class and Style specified, for the following structures:
   1. Administration Control Building - Area 90 (Bid Alternative A).
      a. Provide a new system for both new and rehabilitated portions of the Administration Control Building.
   2. Main Electrical Building – Area 95 (Base Bid).

D. Coordinate the fire alarm system with related equipment and materials furnished under other sections of these Specifications.

E. Connect the Main Electrical Building fire alarm system to the fire alarm control panel (FACP) in the Administration Control Building so that all fire alarm equipment will operate as a single system.

### 1.02 REFERENCES

A. Refer to Section 16050.

B. National Fire Protection Association (NFPA):
   1. 72 - National Fire Alarm Code.
   2. 72E - Automatic Fire Detectors.
   3. 101 - Life Safety Code.

C. Local Jurisdiction Adopted Codes and Standards.

D. Factory Mutual (FM).

E. Underwriters Laboratories (UL):
   1. UL 268 - Smoke Detectors for Fire Alarm Signaling Systems.
   2. UL 864 - Control Units and Accessories for Fire Alarm Systems.

**1.03 DEFINITIONS**

1. Refer to Section 16050.

**1.04 SYSTEM DESCRIPTION**

A. General fire system requirements:
   1. Form a contract with Denalect Alarm Company of Walnut Creek, California to assist in providing the fire alarm and smoke detection system described in this Section. Contact Person:

      David Goldstone
      Sales Manager
      Denalect Alarm Company
      1309 Pine Street
      Walnut Creek, CA 94596
      Office: (925) 932-2211
      Fax: (925) 935-2323
      David_goldstone@denalect.com

B. Provide a complete, addressable, microprocessor-based fire alarm system with initiating devices, notification appliances, and controls and supervisory devices, conforming to the California Fire Code and City of San Leandro Municipal Code and as specified herein.
   1. System connections for initiating (signaling) circuits and notification appliance circuits shall be Class B Style 4.
   2. Circuit Supervision: Circuit faults shall be indicated by a trouble signal at the FACP. Provide a distinctive audible tone and alphanumeric annunciation.

**1.05 CONNECT THE MAIN ELECTRICAL BUILDING FIRE ALARM SYSTEM TO THE FIRE ALARM CONTROL PANEL (FACP) IN THE ADMINISTRATION CONTROL BUILDING SO THAT ALL FIRE ALARM EQUIPMENT WILL OPERATE AS A SINGLE SYSTEM.**

A. Furnish submittals in accordance with Sections 01330 and 16050.

B. Product Data:
   1. Data sheets for system components highlighted to indicate the specific products, features, or functions required to meet this specification including electrical characteristics such as voltage and current ratings, connection requirements, and operational details of all equipment.

2. Alternate or as-equal products submitted under this contract must provide a detailed line-by-line comparison of how the submitted product meets, exceeds, or does not comply with this Specification.

C. Shop Drawings:
1. Fire detection system block diagram.
   a. Fire detection functions and control interconnections for each building as described herein, and as indicated on the Drawings.
   b. Fire alarm control panel layout, schematic, and wiring diagrams, panel displays, and LED arrangement.
   c. Detection device type, features, and setpoints.
   d. Number and size of wires, type of wire insulation required for devices specified, and conduit size for proposed circuits.
2. System power and battery charts with performance graphs and voltage drop calculations to assure that system will operate per the specified backup time periods and under all voltage conditions per UL and NFPA standards.
3. Test reports indicating satisfactory completion of required tests and inspections.
4. System layout on floor plan drawings, drawn to scale using AutoCad software.
5. Fire alarm system input-output point list.
6. Spare parts list for extra materials being furnished.
7. Operating and Maintenance data as specified in 01782.

D. Copy of FACP program.

E. Manufacturer's installation instructions.

F. Designer, manufacturer and installer qualifications.

G. Submit the equipment layout drawings and product data to the local authority having jurisdiction, AHJ, for review and approval of the proposed system.
1. CONTRACTOR is responsible for paying plan check, permit and inspection fees as necessary.
2. Submit AHJ's approval to ENGINEER.

## 1.06 QUALITY ASSURANCE

A. Refer to Section 16050.

B. Installation to be supervised by NICET Level II Technician.

C. Fire alarm systems shall be UL approved.

## 1.07 DELIVERY, STORAGE, AND HANDLING

A. Refer to Section 16050.

## 1.08 PROJECT OR SITE CONDITIONS

A. Refer to Section 16050.

## 1.09 SEQUENCING

A. Submit system layout drawings a minimum of 90 days before placing the foundation of any structure that will have a fire alarm system, in order to ensure that the conduits & device boxes are placed in the correct locations.

B. Submit plans to AHJ for approval.

C. Make submittals, including AHJ's approval to the ENGINEER.

## 1.10 WARRANTY

A. Refer to Section 16050.

## 1.11 SYSTEM START-UP

A. Refer to Section 16050.

## 1.12 MAINTENANCE

A. Furnish service and maintenance of fire alarm system for 1 year from date of Substantial Completion.

# PART 2 PRODUCTS

## 2.01 MANUFACTURERS

A. Mircom Engineered Systems Inc.

## 2.02 EQUIPMENT

A. Provide the fire alarm system with all necessary hardware and software to perform the following functions:
   1. Fire alarm and detection operations.
      a. Provide all required devices as required and specified herein.
   2. Control and monitoring of heat detectors, smoke detectors, and other equipment as indicated in the Specifications or as indicated on the Drawings.
   3. Annunciation:
      a. Operation of alarm and supervisory initiating devices shall be annunciated at the FACP indicating the location and type of device.
   4. System general alarm sequence:
      a. Indication of alarm condition at the FACP.
      b. Identification of the device that is the source of the alarm at the FACP and Annunciator.
      c. Operation of audible and visible notification devices throughout the building until silenced at FACP or Annunciator.
   5. Alarm Silencing:
      a. When the "Alarm Silence" button is pressed, all audible alarm signals turn off.
   6. System Reset:
      a. Provide a system reset button that returns the system to its normal state.

b. Display messages providing operator assurance of the sequential steps as they occur.
c. The system shall verify all circuits or devices are restored before resetting the system to avoid the potential for re-alarming the system.
d. Should an alarm condition continue, the system remains in an alarmed state.

## 2.03 COMPONENTS

A. Fire Alarm Control Panel:
1. Power Requirements:
   a. 120 VAC input power via a dedicated 20 amp circuit.
   b. Battery system:
      1) Provided with sufficient battery capacity to operate the entire system upon loss of normal 120 VAC power in a normal supervisory mode for a period of 24 hours with 5 minutes of alarm operation at the end of this period.
      2) The system shall automatically transfer to battery standby upon power failure.
      3) Provide automatic battery charging and recharging operations.
      4) Supervise the system batteries so that a low battery condition or disconnection of the batteries indicates a trouble at the FACP.
   c. All circuits requiring system operating power shall be 24 VDC with individual fuses at the FACP.
   d. Supervise the incoming power to the system so that any power failure will be indicated at the control unit.
      1) A green "power on" LED shall be displayed continuously while incoming power is present.
      2) FACP shall sound a trouble signal at loss of primary power and to indicate when the system is operating on battery power.
2. Alphanumeric Display and System Controls:
   a. Include an LCD display to indicate alarm, supervisory, and component status messages and include a keypad for use in entering and executing control commands.
3. System Supervision: Component or power supply failure places system in trouble mode.
4. Supply with an alarm silence/acknowledge switch to silence the audible alarms.
   a. Should a subsequent alarm actuation of a different zone occur, the alarm devices shall sound until silenced.
5. Cabinet:
   a. UL listed, lockable steel enclosure.
   b. Front access only.
   c. If more than a single unit is required to form a complete control unit, provide matching modular unit enclosures.

B. Software:
1. Allows for loading and editing instructions and operating sequences as necessary.
2. Capable of on-site programming to accommodate system expansion and facilitate changes in operation.

3. Stored in a non-volatile programmable memory within the fire alarm control unit.
4. Loss of primary and secondary power shall not erase the instructions stored in memory.
5. Capable of full system operation during a new configuration download.

C. Manual Pull Stations:
1. Description:
   a. Single action type.
   b. Red lexan or metal enclosure.
   c. Molded, raised-letter operating instructions of contrasting color.
   d. Mechanically latches upon operation and remain so until manually reset by opening with a key common with the fire alarm control panels.

D. Smoke Detectors:
1. Shall comply with UL 268.
2. Provide with the following features:
   a. Factory Nameplate: Serial number and type identification.
   b. Operating Voltage: 24 VDC, nominal.
   c. Plug-In Arrangement: Detector and associated electronic components are mounted in a module that connects to a fixed base with a twist-locking plug connection.
      1) No special tools required to remove head once it has been locked.
      2) Removal of the detector head shall interrupt the supervisory circuit of the fire alarm detection loop and cause a trouble signal at the control unit.
   d. LED that will flash each time it is scanned by the FACP (once every 4 seconds). In alarm condition, the detector head LED shall be on steady.
   e. Type: Photoelectric smoke.
3. Provide end-of-line resistors as required.
4. Compact Duct Housing:
   a. Transparent cover to monitor for the presence of smoke
      1) Secured to housing by means of 4 captive fastening screws.
      2) Installed by Mechanical
5. Duct Housing:
   a. Provide 2 test ports for measuring airflow and for testing.
      1) Ports will allow aerosol injection in order to test the activation of the duct smoke detector.
   b. Provide a magnetic test area
   c. Red sensor status LED.
   d. For maintenance purposes, it shall be possible to clean the duct housing sampling tubes by accessing them through the duct housing front cover.
   e. Duct detector Installed by Mechanical.
6. Remote test station with an alarm LED and test switch.
7. Maintain circulation of conditioned air around the internally mounted duct sensor housing to keep the sensor housing at its rated temperature range.
8. UL Listed to Standard 268A.
9. Detectors to provide a trouble signal to the FACP when the detector has reached its limit to compensate for environmental changes.

E. Heat Detectors:
1. Provide heat fire detectors as required by the AHJ.

2. UL listed and FM approved.
3. HeatDetector:
   a. Combination fixed-temperature and rate-of-rise unit with plug-in base and alarm indication lamp.
   b. 135 degrees Fahrenheit fixed-temperature setting.
4. Provide end-of-line resistors as required.

F. Circuit Interface Modules:
1. Type 1: Monitor Circuit Interface Module:
   a. For conventional 4-wire smoke detector with Class B wiring supervision.
      1) Module shall provide detector reset capability.
      2) 2 amp fuse to provide over-current power protection for the 4-wire detector.
      3) Module will communicate status (normal, alarm, trouble) to the FACP.
2. Type 2: Control Circuit Interface Module:
   a. Module for signals and other device control with Style 4 and Style 6 wiring supervision.
   b. For non-supervised control.
   c. Provide double pole double throw relay switching for 1 A at 28 VDC resistive, power limited and at 1/2 A at 120 VAC resistive, non-power limited.
   d. The system shall be capable of energizing 100 percent of the relays connected to the signaling line circuit.
3. Type 3: Line Powered Monitor Circuit Interface Module:
   a. Power and its communications supplied by the 2 wire multiplexing signaling line circuit.
   b. Provides location specific addressability to an initiating device by monitoring normally open dry contacts.
   c. Module is required for monitoring waterflow and tamper switches.
4. The Circuit Interface Module to be supervised and uniquely identified by the control unit.
   a. Identification to be transmitted to the control unit for processing according to the program instructions.
   b. Depends on configuration. On-board LED to provide an indication that the module is powered and communicating with the FACP.
   c. Depends on configuration. LEDs provide a troubleshooting aid since the LED blinks on poll whenever the peripheral is powered and communicating.

G. Wiring:
1. Refer to Section 16123.
2. Wire and cable shall be a type listed for its intended use by an approval agency acceptable to the AHJ.
3. SLC channel wiring shall be unshielded twisted pair.
   a. Capacitance rating of less than 60pf/ft
   b. Minimum 3 twists (turns) per foot.

## PART 3 EXECUTION

### 3.01 INSTALLATION

A. Refer to Section 16050.

B. Install system components and all associated devices in accordance with applicable NFPA Standards and manufacturer's recommendations.

C. Smoke detectors shall not be installed until after construction cleanup on all trades is complete and final per NFPA 72.

D. Locate FACP as indicated on the Drawings.

E. Water-Flow and Valve Supervisory Switches: Connect each sprinkler valve required to be supervised.

F. Device Location-Indicating Lights: Locate in the public space immediately adjacent to the device. (Duct detectors only)

G. Wiring:
   1. System Wiring:
      a. Installed in accordance with the appropriate articles from the 2007 edition of the California Electric Code (CEC).
   2. Color Coding:
      a. Color-code fire alarm conductors differently from the normal building power wiring.
      b. Use 1 color code for alarm initiating device circuits wiring and a different color code for supervisory circuits.
      c. Color-code notification appliance circuits differently from alarm-initiating circuits.
      d. Paint fire alarm system conduits, junction boxes, and covers red.
      e. Dedicated circuit that provides power to the FACP shall have a red marking and be identified as "FIRE ALARM CIRCUIT" per NFPA 72.

H. Route all conduits required to connect system components and accessories together embedded in structure floor slabs and/or walls. Conduit may be routed exposed for a maximum of 24 inches at the end of a run to make final terminations to system components.

### 3.02 FIELD QUALITY CONTROL

A. Refer to Section 16050.

B. Manufacturer's Field Services: Provide services of a factory-authorized service representative to:
   1. Supervise the field assembly and connection of components and the pre-testing, testing, and adjustment of the system.
   2. Verify proper installation, correct deficiencies, and be present at the jobsite during final inspection by the ENGINEER.

C. Field Tests:

1. Notify the ENGINEER and the AHJ in writing a minimum of 2 weeks before the scheduled day for the field acceptance tests.
2. Furnish any special tools, equipment and labor to perform the tests.
3. Each device and control function shall be individually witness tested and recorded:
   a. All acceptance tests shall be witnessed by and signed off by the ENGINEER, the owner, the installing Subcontractor, and a representative of the AHJ.
4. The approved Field Acceptance Test Binder shall form the basis of the documentation of the system acceptance tests:
   a. Furnish 2 certified copies of the tests.

## 3.03 CLEANING

A. Refer to Section 16050.

## 3.04 DEMONSTRATION AND TRAINING

A. Refer to Section 16050.

B. Training:
   1. Provide the services of a factory-authorized service representative to demonstrate the system and train Owner's maintenance personnel:
      a. Train Owner's maintenance personnel in the procedures and schedules involved in operating, troubleshooting, servicing, and maintaining the system. Provide a minimum of 8 hours training.

END OF SECTION

# SECTION 16711

# SECURITY SYSTEMS

## PART 1 GENERAL

### 1.01 SUMMARY

A. Section includes requirements to:
   1. Design, furnish, install, and configure complete security systems, including:
      a. Intrusion switches and alarms.
      b. Building access control systems.
      c. Motion detectors.
      d. Closed-circuit television (CCTV) Systems.

B. Related sections:
   1. The Contract Documents are complementary; what is called for by one is as binding as if called for by all.
   2. It is the CONTRACTOR's responsibility for scheduling and coordinating the Work of subcontractors, suppliers, and other individuals or entities performing or furnishing any of CONTRACTOR's Work.
   3. The following Sections are related to the Work described in this Section. This list of Related Sections is provided for convenience only and is not intended to excuse or otherwise diminish the duty of the CONTRACTOR to see that the completed Work complies accurately with the Contract Documents.
      a. Section 01330 - Submittal Procedures.
      b. Section 16050 - General Requirements for Electrical Work.

### 1.02 REFERENCES

A. Refer to Section 16050.

### 1.03 DEFINITIONS

A. Refer to Section 16050.

### 1.04 SYSTEM DESCRIPTION

A. General security system requirements:
   1. Form a contract with Denalect Alarm Company of Walnut Creek, California to assist in providing the security system described in this Section. Contact Person:

      David Goldstone
      Sales Manager
      Denalect Alarm Company
      1309 Pine Street
      Walnut Creek, CA 94596
      Office: (925) 932-2211
      Fax: (925-935-2323
      David_goldstone@denalect.com

Design, provide, and configure security systems for new and modified structures, including the following:

2. Grit Facility – Area 15:
   a. Intrusion contacts at each exterior personnel door.
   b. Intrusion alarm siren.
   c. Bosch Intrusion alarm keypad.
   d. Bosch Intrusion alarm control panel.
   e. Proximity card reader at each personnel door and equipment door.
   f. Electric door-strike hardware at each personnel door.
   g. Stanley Pac Building access control panel.
3. Administration Control Building – Area 90: (Bid Alternative A)
   a. Intrusion contacts at each exterior personnel door and equipment door.
      1) Two contacts for double doors.
   b. Intrusion alarm siren.
   c. Bosch Intrusion alarm keypad.
   d. Bosch Intrusion alarm control panel.
   e. Proximity card reader at each personnel door and equipment door and also include three interior office doors.
   f. Electric door-strike hardware at each personnel door and equipment door.
   g. Stanley Pac Building access control panel.
   h. CCTV cameras:
      1) 1 at the southwest corner of the building, mounted to provide a view of the back access gate to Davis street.
      2) 1 on the west side of the building, mounted to provide a view of the new headworks.
4. Main Electrical Building – Area 95:
   a. Intrusion contacts at each exterior personnel door, equipment door and overhead rollup door.
      1) Two contacts for double doors.
   b. Intrusion alarm siren.
   c. Bosch Intrusion alarm keypad.
   d. Bosch Intrusion alarm control panel.
   e. Proximity card reader at each personnel door and equipment door.
   f. Electric door-strike hardware at each personnel door and equipment door.
   g. Stanley Pac Building access control panel.
   h. CCTV cameras:
      1) 1 at the northwest corner of the building outside the men's locker room, mounted to provide a view of the parking lot.
      2) 1 at the main entry door to the building, mounted to provide a view of personnel entering the building.
      3) 1 at the southwest corner of the building, mounted to provide a view of the front access gate.
      4) 1 at the lab entry door, mounted to provide a view of personnel entering the building.
      5) 1 at the southeast corner of the building outside the lab, mounted to view the courtyard between the Administration Control Building and Digesters No. 2 and 3.
5. Site access:
   a. Front Gate (Bid Alternative A):

1) Rehabilitate the access control system for the motorized gate near the main entrance to the Administration Control Building as required to interface with the new security system.
   a) Provide proximity card readers for both entry and exit.
   b) Provide posts and/or goosenecks at each card reader location.

b. Back Gate
   1) Provide provisions to connect access control for a future motorized gate near the back entrance adjacent to the Main Electrical Building. Connections shall be made in the Main Electrical Building.
      a) Provisions for proximity card readers for both entry and exit.
         (1) Provisions shall allow connection of the proximity card readers at the Main Electrical Building in the future.

6. CCTV Monitoring Equipment:
   a. Provide a viewing monitor station, capable of viewing the feeds from all CCTV cameras located on-site. Install in the Administration Control Building as directed by the City.
   b. Provide a hard-disk based digital video recorder capable of recording the feeds from all CCTV cameras located on-site for a period of 7 days. Install in the Administration Control Building as directed by the City.

B. Connections
   1. Provide all conductors, conduit, boxes, and terminations required to connect system components and accessories together for a fully functional system, including conductors between remote buildings and the Administration Control Building.
   2. Connect all equipment requiring 120V power to a spare circuit in the closest 120V lighting panel. Provide updated panel schedules in the lighting panels and mark up the as-built drawings to indicate the circuits used.

C. System configuration:
   1. Configure the security systems as follows:
      a. Provide the same level of functionality as the existing security systems at the Administration Control Building.
      b. Configure proximity card readers and building access control panels such that permissions for all buildings can be managed from the system at the Administration Control Building.

## 1.05 THE ACCESS CONTROL SYSTEM AND THE INTRUSION ALARM SYSTEM SHALL BE TWO SEPARATE SYSTEMS.

A. Furnish submittals in accordance with Sections 01330 and 17050.

B. Product Data:
   1. Data sheets for system components, including the following:
      a. Intrusion contacts.
      b. Intrusion alarm sirens.
      c. Intrusion alarm keypads.
      d. Intrusion alarm control panels.
      e. Proximity card readers.
      f. Electric door-strike & Electric lock hardware.
      g. Building access control panels.
      h. Motion sensors.

i. Closed-circuit television cameras equipment.

C. Shop Drawings:
1. Mounting and installation details for the following:
a. Intrusion contacts.
b. Proximity card readers.
c. Closed-circuit television cameras.
2. System layout drawings for each structure:
a. Show the location of all proposed security system components and accessories.
b. Show the proposed routing and size of all conduits connecting components of the security system to each other, to remote devices, or to power supplies.
c. Identify the cables required to be installed in each conduit.
d. Use scaled Drawings from the Contract Documents as a background.

D. Operation and Maintenance Manuals.
1. Submit the manufacturer's installation and testing manuals for each type of equipment.

E. Spare Parts:
1. Submit a list of recommended spare parts for each piece of equipment. Furnish the name, address, and telephone number of the nearest distributor for each piece of equipment.

## 1.06 QUALITY ASSURANCE

A. Refer to Section 16050.

## 1.07 DELIVERY, STORAGE, AND HANDLING

A. Refer to Section 16050.

## 1.08 PROJECT OR SITE CONDITIONS

A. Refer to Section 16050.

## 1.09 SEQUENCING

A. Submit system layout drawings a minimum of 45 days before placing the foundation of any structure that will have a security system, access control or Closed-circuit television cameras, in order to ensure that the conduits & device boxes are placed in the correct locations.

## 1.10 WARRANTY

A. Refer to Section 16050.

## 1.11 COMMISSIONING

A. Refer to Section 16050.

## PART 2 PRODUCTS

### 2.01 MANUFACTURERS

A. Match existing equipment in use at the existing Control Building.

### 2.02 COMPONENTS

A. Intrusion contacts: Match existing equipment in use at the existing Control Building.

B. Intrusion alarm horn: Match existing equipment in use at the existing Control Building.

C. Intrusion alarm keypads: Match existing equipment in use at the existing Control Building.

D. Intrusion alarm control panels: Match existing equipment in use at the existing Control Building.

E. Proximity card readers: Match existing equipment in use at the existing Control Building.

F. Electric door-strike & electric locking hardware: As required to function properly with the door hardware and security systems supplied.

G. Building access control panels: Match existing equipment in use at the existing Control Building.

H. Motion sensors: Match existing equipment in use at the existing Control Building.

I. Cables: As specified in Section 16123.

J. Conduit: As specified in Section 16130.

K. Boxes: As specified in Section 16134.

### 2.03 ACCESSORIES

A. Provide all power supplies required for building access control panels and electric locks and door-strike hardware.

## PART 3 EXECUTION

### 3.01 INSTALLATION

A. Embed all boxes for intrusion contact(s), intrusion alarm horn(s), intrusion alarm keypad(s), proximity card readers, electric door-strike & electric lock hardware, motion sensors and closed-circuit television cameras in new structure walls, such that the front face of the box is flush with the wall.

B. Route all conduits required to connect system components and accessories together embedded in structure floor slabs and/or walls. Conduit may be routed

exposed for a maximum of 24 inches at the end of a run to make final terminations to system components.

## 3.02 ADJUSTING

A. Refer to Section 16050.

## 3.03 CLEANING

A. Refer to Section 16050.

## 3.04 DEMONSTRATION AND TRAINING

A. Training:
   1. Provide two 4-hour training sessions on consecutive days. Training shall include the following:
      a. Walk-through of the new and modified security systems.
      b. Instructions on how to use proximity card readers.
      c. Instructions on how to use intrusion alarm keypads.
      d. Instructions on how to configure permissions for proximity card readers and building access control systems.
      e. Instructions on how to use Closed-circuit television camera system.

## 3.05 PROTECTION

A. Refer to Section 16050.

END OF SECTION

# SECTION 16751

# DATA COMMUNICATIONS CABLING SYSTEM

## PART 1 GENERAL

### 1.01 SUMMARY

A. This section only applies to the Administration Control Building.

B. Work specified in this section encompasses products, assemblies and basic installation methods required for electrical project systems specified under this division and includes, but is not limited to:
   1. Data cables.
   2. Patch panels.
   3. Modular jacks and connections.
   4. Ceiling support hangers and supports.
   5. Ground bar.

C. Work not included: Equipment enclosures, racks, switches, routers and computers.

### 1.02 SUBMITTALS

A. Submit in conformance with the requirements of Section 16010 the following items:
   1. Data cables.
   2. Patch panels.
   3. Modular jacks and connections.
   4. Ceiling support hangers and supports.
   5. Ground bar.

### 1.03 GENERAL LAYOUT

A. All cables shall be installed from wall jacks to patch panels, terminated and tested. Two (2) data cables shall be provided at each wall outlet, work station or other designated location.

## PART 2 PRODUCTS

### 2.01 CABLE

A. Data Cable: Category 6, 4 pair 24 gauge UTP, solid copper, yellow jacket, or of color as directed by Engineer: Systimax 360, Penn, Belden, or equal.

### 2.02 CABLE CONNECTIONS

A. Data Cables: Data cables shall be terminated at patch panels, 48 port flat quick-port UTP and Shielded, Cat 6: Leviton 1RU series with patch block and accessories for a complete installation. Data modular jacks shall be modular construction for outlet box cover mounting, Leviton QuickPort Cat 6 connectors, 61110-R-6 series, Hubbell, or equal.

## 2.03 OUTLET BOXES AND COVERS

A. Standard Outlet Boxes for Data and Voice Outlets: Galvanized, one-piece, drawn steel, knock-out type of size and configuration best suited to the application indicated on the plans. Minimum box size: 4 11/16 inches square by 2 1/8 inch deep.

B. Flush Device Plates: Device plates shall be of one-piece type of suitable shape for the devices to be covered. Where the device plate does not cover the outlet opening, special large plates shall be used. Sectional Device Plates will not be permitted. Plate color to be as selected by ENGINEER: Leviton 2-port wall plate, 41080 -2WP series.

C. Laboratory Counter Surface Raceways: Devices plates shall be as made by surface raceway manufacturer, aluminum or stainless steel.

## 2.04 CABLE SUPPORTING DEVICES

A. J-hooks for cable support in ceiling spaces.

B. Wire-basket cable management system for routing groups of cables in ceiling space and where suspended in closets and electrical rooms: EZ-Tray/Cablofil, Mono-tray, or equal.

## 2.05 GROUNDING:

A. Server-Telecom Closet: Provide telecommunications wall mounted 10" long ground bus bar in closet, with #2 insulated ground to building main grounding electrode/ground bus, Chatsworth #13622-010 kit with ground bar, insulators, standoff brackets and fittings, Erico, or equal.

## 2.06 FIRE STOP

A. Fire stop assemblies shall be used for cable passing through rated walls and partitions: STI Fire Stop sealants, and EZ-Path wall penetration assemblies, Nelson Fire Stop, or equal.

# PART 3 - EXECUTION

## 3.01 CONDUIT APPLICATIONS

A. Electrical Metallic Tubing (EMT): Use minimum 1-inch conduit from outlet box into accessible ceiling spaces, terminated with conduit fitting with plastic bushing.

## 3.02 CABLE INSTALLATION

A. General:
   1. Cables shall not be installed in conduits until all work of any nature that will cause injury is completed. Care shall be taken in pulling cables that insulation is not damaged. U.L. approved, non-petroleum base and insulating type pulling compound shall be used as needed.

B. Data Cables:

1. All Data cables shall be tested in accordance with the EIA/TIA TSB-67 specifications for CAT 6 testing. Tests shall include wire map, length, attenuation, NEXT and must be performed by a Category 6 tester, WAVE-Tek, LANtek PROXL or equal.

END OF SECTION

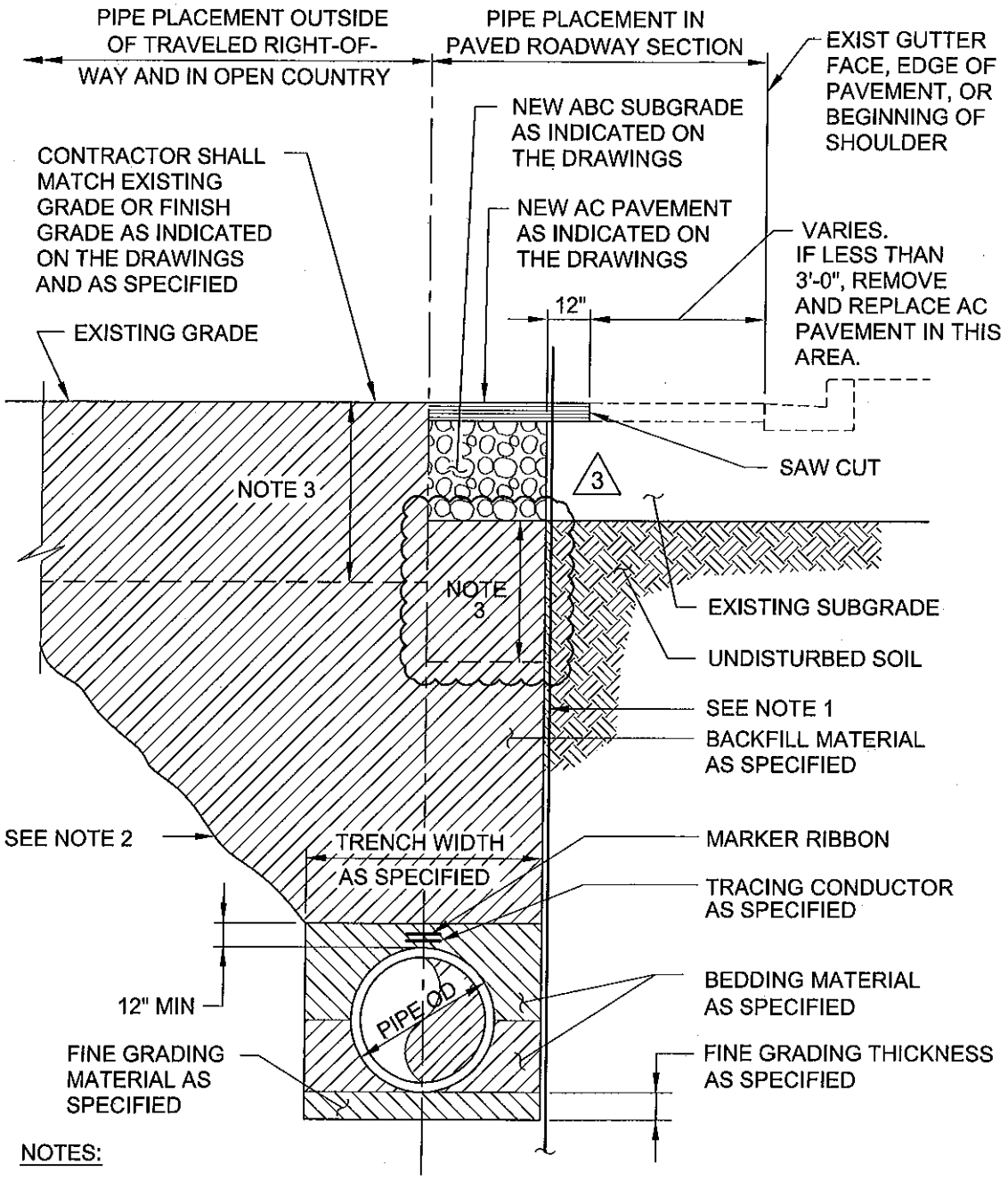


NOTES:

1. SEE SPECIFICATIONS FOR SHORING REQUIREMENTS.
2. SEE SPECIFICATIONS FOR SLOPING REQUIREMENTS.
3. EXISTING FILL MATERIAL. FOR BIDDING PURPOSES, ASSUME EXCAVATED FILL MATERIAL FROM GRADE TO 3 FEET BELOW GRADE REQUIRES DISPOSAL AT A CLASS 2 DISPOSAL FACILITY. SEE SECTION 01354 FOR ADDITIONAL HAZARDOUS MATERIAL REQUIREMENTS.

P002 TYP R

PIPE INSTALLATION AND PAVEMENT REPLACEMENT

09-22-10

SKETCH 3.01 - DRAWING 00-TP-01

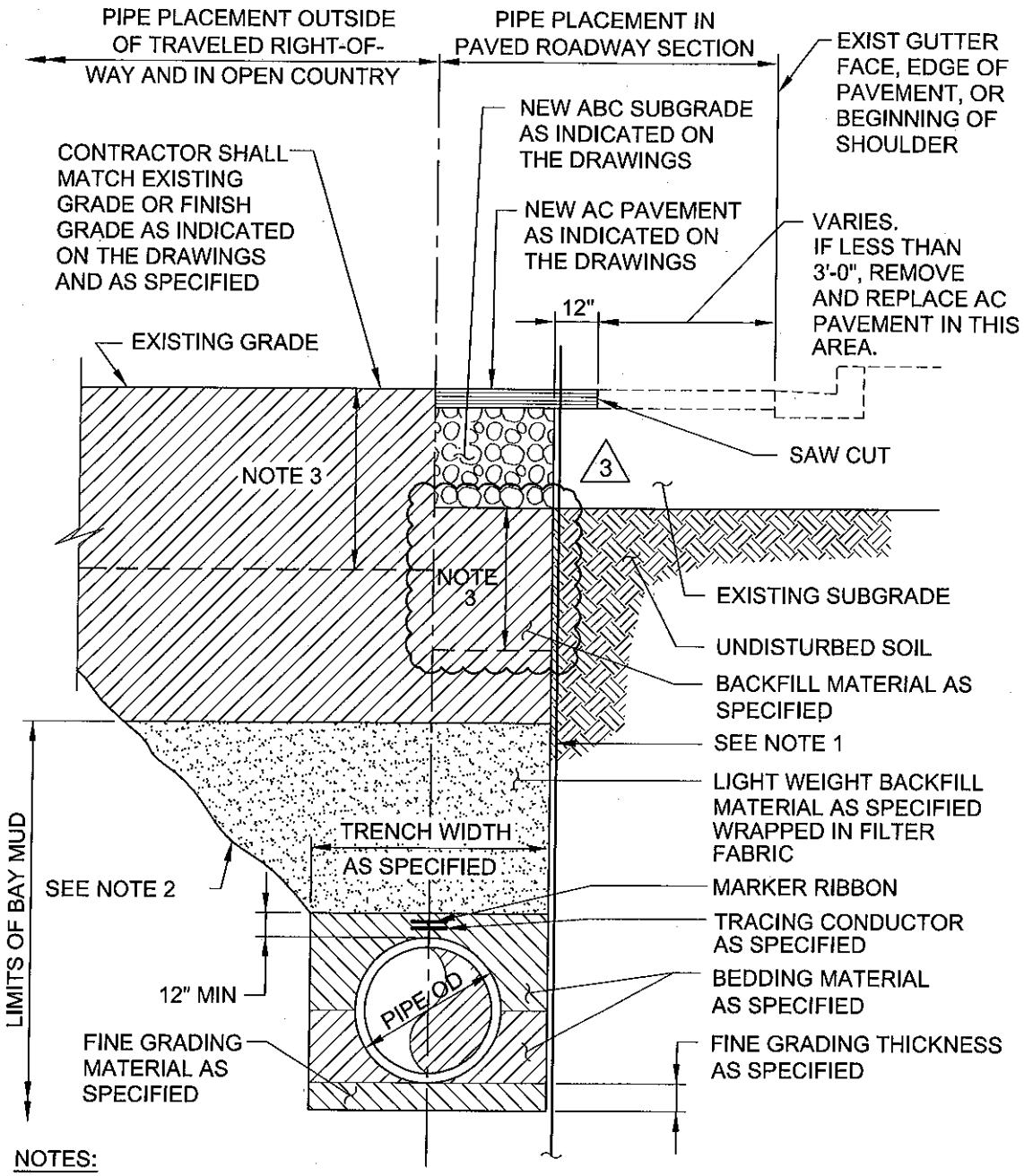


NOTES:

1. SEE SPECIFICATIONS FOR SHORING REQUIREMENTS.
2. SEE SPECIFICATIONS FOR SLOPING REQUIREMENTS.
3. EXISTING FILL MATERIAL. FOR BIDDING PURPOSES, ASSUME EXCAVATED FILL MATERIAL FROM GRADE TO 3 FEET BELOW GRADE REQUIRES DISPOSAL AT A CLASS 2 DISPOSAL FACILITY. SEE SECTION 01354 FOR ADDITIONAL HAZARDOUS MATERIAL REQUIREMENTS.

P003 TYP R

PIPE INSTALLATION AND PAVEMENT REPLACEMENT IN BAY MUD AREAS

09-22-10

SKETCH 3.02 - DRAWING 00-TP-01

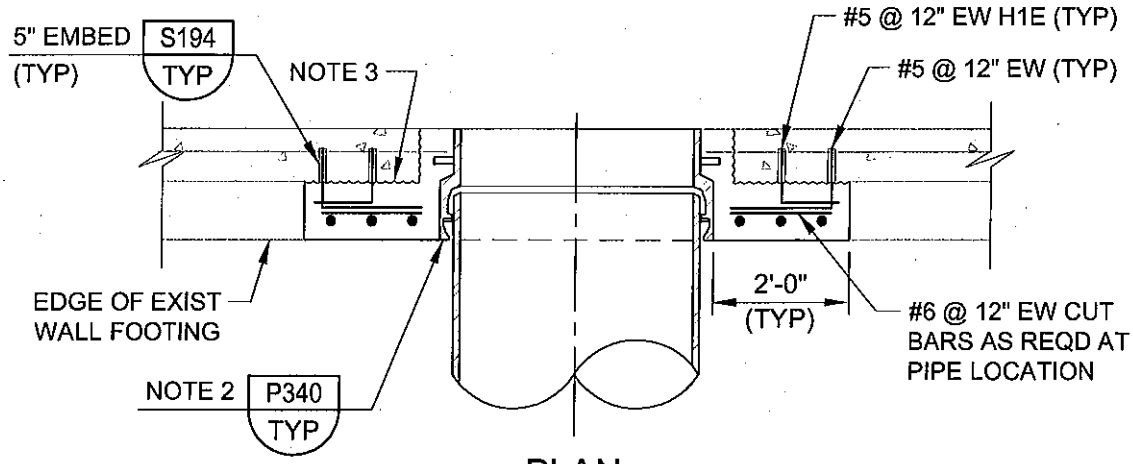


PLAN

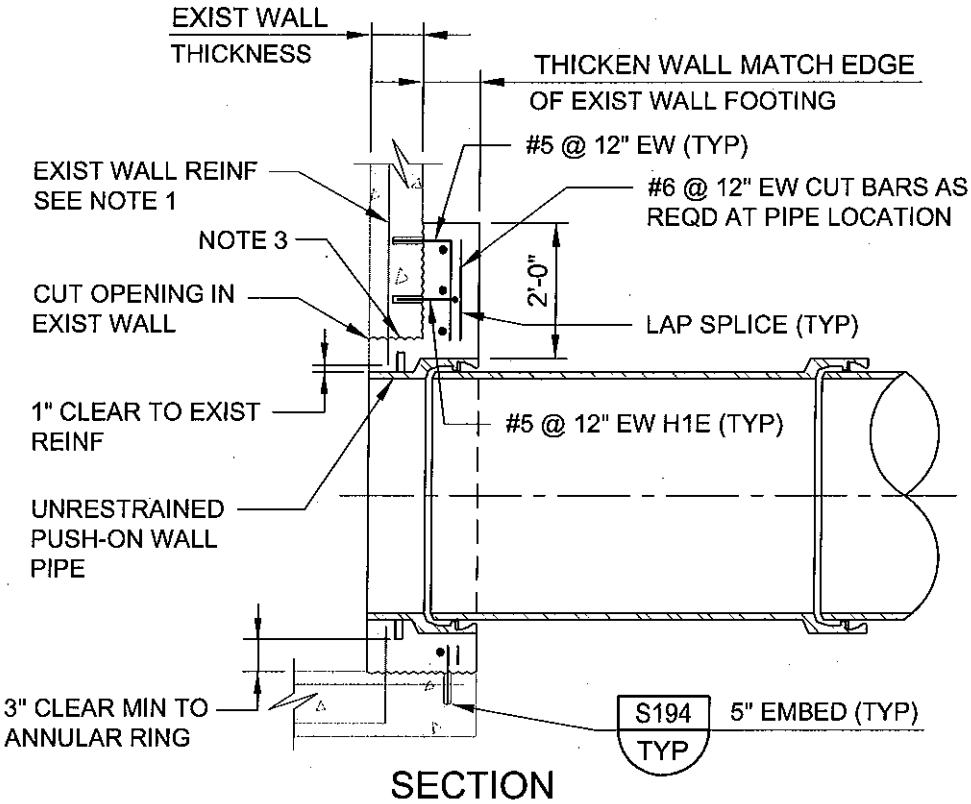


SECTION

NOTES:

1. DO NOT OVERCUT OR DAMAGE EXISTING REBAR.
2. PIPE UNRESTRAINED AT WALL. RESTRAIN ALL PIPE JOINTS BEYOND WALL PIPE.
3. ROUGHEN EXIST WALL SURFACE TO 1/4" AMPLITUDE. CLEAN AND APPLY EPOXY RESIN / PORTLAND CEMENT BONDING AGENT PRIOR TO PLACING CONCRETE.

P313 TYP J

# WALL THIMBLE FOR DIP AT EXISTING CONCRETE WALL

03-11-11

SKETCH 3.03 - DWG 00-TP-04

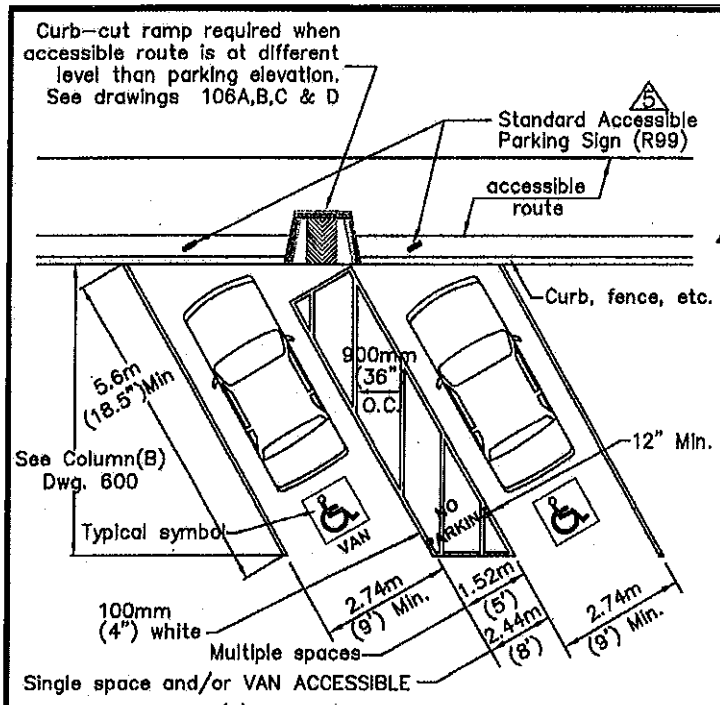


One in every eight (8) required accessible spaces, but not less than one, shall be served by a passenger side access aisle 8 feet wide minimum and shall be designated as "VAN ACCESSIBLE".

## 5 ACCESSIBLE SPACES

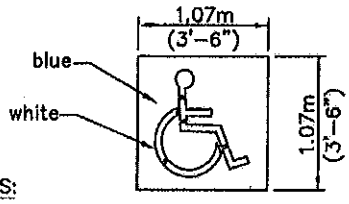


NOTES:

5 1. White symbol of accessibility logo shall be per Caltrans specifications.

2. Legend shall be Flint Trading, Inc. "PreMark" Preformed Thermoplastic Handicap Pavement Marking with VizIGRIP 336–475–6800 www.flinttrading.com

## WHEELCHAIR PAVEMENT LEGEND

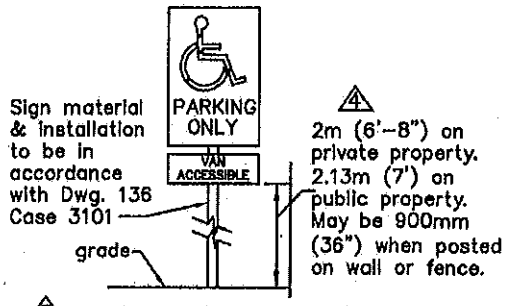


## 5 ACCESSIBLE PARKING SIGN INSTALLATION

See Notes 7, 8 & 9

NOTES:

1. All work shall be done in accordance with the Standard Specifications for Public Works Construction, the "GREENBOOK", the most current edition and and all supplements thereto, adopted by the Southern California Chapter of the American Public Works Association and the Special Provisions (Technical Specifications) thereto adopted by the City.
2. Locations and quantity of accessible spaces subject to review and approval by City. 5
3. The parking stalls shall be marked with 100mm (4") white stripes and a white symbol of accessibility logo on a blue 1.07m x 1.07m (3'–6" x 3'–6") background square in each stall. The words "NO PARKING" shall be applied within each access aisle. The letters must be a minimum of 306mm (12") tall. All stripes and pavement markings shall be thermoplastic.
4. Parking stalls next to fences, walls, sidewalks or structures may be required to contain wheel stops, curbs or other protective devices.
5. Wheelchair users must not be forced to go behind parked cars other than their own.
6. 5 Accessible spaces must permit use of either car door. 5
7. Provide a reflectorized R99 sign in front of each accessible parking space. R99 signs shall be per Caltrans sign specification sheet. Sign location subject to review and approval by the City Engineer. R99 sign shall be centered at the interior end of the parking space at a minimum height of 2.13m (7') above finished grade, or centered on the wall at the interior end of the parking space at a minimum height of 900mm (36") from the parking space finished grade, ground, or sidewalk.
8. Van accessible parking shall have additional R99A sign mounted below symbol of accessibility that states "VAN ACCESSIBLE".
9. A R100B sign shall also be posted, in a conspicuous place, at each entrance to an off street–parking facility, which includes the following information:
   Towed vehicles may be reclaimed at the San Leandro Police Department or by telephoning (510) 577–3201. 5
   Optionally, a R100 sign may be installed at each accessible parking space.

ACAD FILE NO. C3101D602 Rev5.dwg

**CITY OF SAN LEANDRO * STANDARD PLANS**

| NO. | REVISIONS | DATE | BY |
|---|---|---|---|
| 5 | REMOVED "HADICAPPED" ADDED "ACCESSIBLE" | 3/17/11 | KC |

**5 ACCESSIBLE PARKING**
SIGNING AND STRIPING

APPROVED
Kenneth Joseph, City Engineer R.C.E. No.34870 Expires 9/30/11

| DRAWN GF/MLWH/VL | CHECKED REDIII/KJ/KRC | DATE May 2002 | SCALE NONE | SHEET 1 OF 1 | DWG. NO. 602 CASE. 3101 |
|---|---|---|---|---|---|

SKETCH 3.04 - DWG 00-SP-08