City of San Leandro
Civic Center, 835 E. 14th Street
San Leandro, California 94577

WPCP REHABILITATION PROJECT
PROJECT NO. 08-593-52-239

ADDENDUM NO. 4

March 30, 2011

TO: All Prospective Bidders

The additions and/or deletions contained in this Addendum shall be made a part of the plans and specifications and contract documents for the above described project, and shall be subject to all applicable requirements thereunder, as if originally shown and/or specified.

THE CONTRACT BOOK SHALL BE REVISED AS FOLLOWS:

Specifications

Item 4.01 **Table of Contents, Division 10** – Add the following Item:

"10260 WALL AND CORNER GUARDS".

Item 4.02 **Section 00700-7.14** – Revise header as follows:

"ANTI-TRUST CLAIMS"

Item 4.03 **Section 00800 Part 2** – Delete "PART 2" in its entirely and replace with the updated wage rate determination General Decision No. CA100029 dated 3/19/2011, attached herein:

Item 4.04 **Section 01810 - 1.01.B** - Add the following:

"10. Section 15960 - Commissioning - HVAC and Plumbing Systems"

Item 4.05 **Section 01810 - 1.02.B** - Revise the first sentence to read:

"B. Commissioning Agent: The OWNER will retain an independent Commissioning Agent (CxA) to direct, oversee and witness the commissioning process, in accordance with..."

Item 4.06 **Section 01810 - 1.05 A. 2. e.** - Delete in its entirety.

Item 4.07 **Section 01810 - 1.05 A. 3. b.** - Change the word "CONTRACTOR" to read "Commissioning Authority".

Stephen H. Cassidy, Mayor

City Council: Pauline Russo Cutter, Ursula Reed, Michael J. Gregory, Diana M. Souza, Jim Prola, Joyce R. Starosciak

Item 4.08 **Section 02240-1.01.A** – Delete Item 1 and replace with the following Item 1:

"1. Design, installation, and maintenance of dewatering systems."

Item 4.09 **Section 02240-1.02** – Add the following Item E:

"E. Water treatment:

1. Project site contains soils known to be hazardous. Dewatering water may also be affected by these known contaminants.
2. Provide dewatering water treatment system(s) to remove sediments and contaminants to allow for proper disposal. Treatment systems shall include, but not be limited to, a storage and desilting tank and a filtering system.
3. Sample and analyze dewatering water entering and exiting the treatment system water for chemical contaminants regularly and as required for proper disposal.
4. If dewatering water is contaminated, ensure that water does not leak or spill from the time of its extraction until passing through the treatment process for removal of the contaminants.
5. Include provisions for disposal of contaminated filter media, settled material from desilting tank, and any other material that may be potentially contaminated by the dewatering water. Disposal shall be in accordance with state and federal laws and regulations. Reference Section 01354."

Item 4.10 **Section 02240-3.01.C** – Add the following Item 4:

"4. CONTRACTOR shall include in his bid the disposal of all dewatering water, including water contaminated by soils known to be hazardous."

Item 4.11 **Section 02260-1.04.B.1.l** – Delete Item l and replace with the following Item l:

"l. The maximum total deflection at any point on the shoring shall not be more that ½-inch for the following locations:

1) Shoring adjacent to the existing Administration Control Building.
2) Shoring for installation of piping and manholes located in Davis Street."

Item 4.12 **Section 02260-1.04.B.1** – Add Item n as follows:

"n. Use impermeable shoring such as interlocking sheet piles or other impermeable shoring system acceptable to the ENGINEER."

Item 4.13 **Section 07905, Steel Dome Digester Cover Annular Seal** – Add new Section 07905, herein attached.

Item 4.14 **Section 07260 – 3.02 C:** Change the last sentence to read:

"At perimeters, turn edges down to bottom of footings."

Item 4.15 **Section 07920 – 1.03 B:** Revise first sentence to read:

"For interior applications use sealants and sealant primers that comply with California Air Resources Board and Bay Area Air Quality Management District requirements."

Item 4.16 **Section 07920 – 2.01 A. 2. :** Revise to read:

"2. VOC Content of Interior Sealants: Comply with LEED requirements. Provide interior sealants and sealant primers meeting VOC requirements of South Coast Air Quality Management District (SCAQMD) and with the following limits for VOC content with calculated according to 40 CFR 59:"

Item 4.17 **Section 09960-1.05.J.1**– Delete Item 1.

Item 4.18 **Section 09960-1.05.J.2** – At the end of Item 2, delete the words ", effective January 1, 2004" and replace with "and meet the most current rules."

Item 4.19 **Section 10172 – 3.02.** - Add the following :

"L. Bumper/Coathook: Install with sufficient length to prevent door from contacting grab bars or toilet accessories."

Item 4.20 **Section 10260 - WALL AND CORNER GUARDS** - Add new section in its entirety as attached herewith.

Item 4.21 **Section 10800 – 3.05 B through L** – Revise Items B through L to read as follows:

"B. Toilet Tissue Dispensers: Surface-mounted, double-roll tissue dispenser, stainless steel,; Bobrick B-2888, Bradley, or equal.

C. Toilet Seat Cover Dispenser: Surface-mounted toilet seat cover dispenser, dispensing 250 seat covers, stainless steel; Bobrick B-221, Bradley, or equal.

D. Sanitary Napkin Disposal: Recessed stainless steel disposal unit, with self-closing door, and removable leak-proof polyethylene waste receptacle, 1.2 gallon capacity; Bobrick B-35303, Bradley, or equal.

E. Men's Combination Seat Cover Dispenser, Toilet Tissue Dispenser: Partition-mounted combination unit serving two compartments, centered in partition; Bobrick B-347, Bradley, or equal.

F. Women's Combination Seat Cover Dispenser, Napkin Disposal, Toilet Tissue Dispenser: Recessed-mounted combination unit serving one compartment; Bobrick B-3574, Bradley, or equal.

G. Surface-mounted Soap Cartridge Dispensers: Surface mounted soap or foam dispenser, with interchangeable plastic containers with plastic pumps for foam cartridges (up to 500ml), lockable, with soap level indicator, stainless steel; Bobrick B-26607, Bradley, or equal.

H. Paper Towel Dispenser and Waste Receptacle: Semi-recessed combination paper towel dispenser and waste receptacle, dispensing 600 C-fold, 800 multifold, or 1100 singlefold paper towels; 6.3 gallon capacity, leakproof, molded plastic waste receptacle locked into cabinet; 4 -inch deep recessed mounting; Bobrick B-38032, Bradley, or equal.

I. Paper Towel Dispenser and Waste Receptacle: Surface-mounted combination paper towel dispenser and waste receptacle, dispensing 600 C-fold or 800 multifold, 3.8 gallon capacity, leakproof, molded plastic waste receptacle locked into cabinet; surface mounting; Bobrick B-380349, Bradley, or equal.

J. Paper Towel Dispenser: Surface-mounted paper towel dispenser, dispensing 400 C-fold or 525 multi-fold paper towels: Bobrick B-262, Bradley, or equal. Four (4) required in Laboratory. Locations to be determined by ENGINEER.

K. Robe Hook: Heavy duty single robe hook, cast brass with satin chrome finish, with concealed fasteners; Bobrick B-2116, Bradley, or equal.

L. Folding Shower Seat: Stainless steel frame with reversible seat, solid phenolic slats in off-white color; Bobrick B-5181, Bradley, or equal."

Item 4.22 **Section 11210-2.02.B.7**– Delete last sentence of Item 7 and replace with "Coupling shall be Fernco Model No. 1056-212RC, or equal."

Item 4.23 **Section 11210-2.02.E**– Delete Items 1 through 4.

Item 4.24 **Section 11210-2.02.E.7**– Revise Item 7 to read:

"7. A bubbler flow meter per Section 17202 shall be installed at the Headworks and Influent Pump Station structure such that a Confined Space Entry into the manhole is not required to maintain and service the bubbler flow meter."

Item 4.25 **Section 11210-2.02.G**– Delete Item 1.

Item 4.26 **Section 11210-2.02.G.2.a**– Revise Item a to read:

"a. Graduated in one hundredths of a foot. Provide depth-to-flow conversion chart for units of gpm and mgd."

Item 4.27 **Section 11368-2.06** – Delete Item A and replace with the following Item A:

"A. Distributor Controls: The operation of automatic electrically driven rotary distributors as employed in these specifications is covered under U.S. Patent Number 5,160,435. Within 90 days of award of the contract, provide proof of a fully paid license to operate the electrically driven distributor or submit a signed letter certifying that the product does not infringe on the stated patent. WesTech Engineering of Salt Lake City, Utah is the exclusive licensee of the patents with rights to sublicense. The equipment supplier shall include in his bid a Patent License fee, if applicable."

Item 4.28 **Section 15117-2.01.A**– At the end of the Item A text, after the word "equal", add ", approved by East Bay Municipal Utility District".

Item 4.29 **Section 15117-Part 2**– Add the following new Items 2.09 and 2.10.

"2.09 BACKFLOW PREVENTER FOR FIRE SERVICE

A. Manufacturers: One of the following or equal, approved by East Bay Municipal Utility District:
   1. Ames:
      a. Model 4000-CIV
   2. Febco:
      a. Model 825YD
      b. Model 860
   3. Zurn/Wilkins:
      a. Model 375
   4. Watts:
      a. Series 909

B. Design: Reduced pressure chamber type in accordance with AWWA C 511.

C. Include shutoff valves at each end of backflow preventer with properly located test cocks.

D. Shutoff valves:
   1. Provide with resilient seated, outside stem and yoke gate valves.

E. Fittings: Ductile iron.

F. Bolts, nuts and other hardware: Stainless steel.

2.10 FIRE DEPARTMENT CONNECTION

A. Description: Freestanding, with cast-bronze body, thread inlets according to NFPA 1963 and matching local fire department hose threads, and threaded bottom outlet. Include lugged caps, gaskets, and chains; lugged swivel connection and drop clapper for each hose-connection inlet; 18-inch-high brass sleeve; and round escutcheon plate.

B. Standard: UL 405.

C. Connections: Two NPS 2-1/2 inlets.

D. Finish, including sleeve: Polished chrome-plated.

E. Escutcheon Plate Marking: "AUTO SPKR."

Item 4.30 **Section 15052-3.04.A.4** – Revise abbreviation "PEE" to read "PEN".

Item 4.31 **Section 15052-3.04-PIPING SCHEDULE (BASE BID)** – Add the following pipe services to the Piping Schedule (Base Bid):

ABBR.	SERVICE	DIAMETER (INCHES)	MATERIALS	CLASS, SCHEDULE, OR THICKNESS	JOINTS/ FITTINGS	TEST PRESSURE/ METHOD	LINING	COATING	COMMENTS
FS	FIRE SERVICE								
	ABOVEGROUND	6 TO 12	DIP	CLASS 53	FL	125 PSIG/HH	CM	EPP	
	UNDERGROUND	6 TO 12	PVC, AWWA C900	CLASS 150	RPO OR FL	125 PSIG/HH	NONE	NONE	DOUBLE PEN ALL METALLIC FITTINGS

Item 4.32 **Section 15410 – 1.03** – Add the following:

"O. Building Commissioning, Section 01810."

Item 4.33 **Section 15410 – 2.01.D.2** – Revise sentence as follows:

"2. Below Slab: Type K copper tubing ANSI H23.1 with wrought copper sweat fittings ANSI B16.22 joined with lead free solder."

Item 4.34 **Section 15410 – 2.01.E.2** – Revise addendum item 2.14 sentence as follows:

"2. Below Slab: Type K copper tubing ANSI H23.1 with wrought copper sweat fittings ANSI B16.22 joined with lead free solder."

Item 4.35 **Section 15410 – 2.01.G.2** – Revise addendum item 2.15 sentence as follows:

"2. Below Slab: Type K copper tubing ANSI H23.1 with wrought copper sweat fittings ANSI B16.22, with long radius elbows, joined with brazed joints."

Item 4.36 **Section 15410 – 2.01.H.2** – Revise addendum item 2.15 sentence as follows:

"2. Below Slab: Type K copper tubing ANSI H23.1 with wrought copper sweat fittings ANSI B16.22, with long radius elbows, joined with brazed joints."

Item 4.37 **Section 15500-1.03.D** – Revise Item D as follows:

"D. Site fire protection piping, including installation of post indicating valve and fire department connection as shown on the Drawings and specified in Section 15117."

Item 4.38 **Section 15500-2.01.C** – Revise wording inside brackets from "furnished by this contractor and furnished by site utility contractor" to "furnished by design-build contractor for fire sprinkler system and provided to CONTRACTOR for installation".

Item 4.39 **Section 15500-2.01.G** – Revise Item G as follows:

"G. Fire department connection (furnished by design-build contractor for fire sprinkler system and provided to CONTRACTOR for installation): See Section 15117."

Item 4.40 **Section 15800 – 1.03** – Add the following:

"J. Building Commissioning, Section 01810."

Item 4.41 **Section 15800-2.02.A.5.c.1)** – Revise sentence to read as follows:

"1) Des Champs Technologies air handling unit, Haakon, Governaire, Temtrol, or equal."

Item 4.42 **Section 15850 – 1.03** – Add the following:

"J. Building Commissioning, Section 01810."

Item 4.43 **Section 15950-2.01.A** – Revise Addendum No. 2 item 2.60 to read as follows:

"Johnson Controls, Inc. – Metasys (no exceptions allowed). Installation is to be performed by a Contractor approved and certified by Refrigeration Supplies Distributor (RSD) Total Controls or Johnson Controls. A class C-10 or C-20 contractor license is required for this work."

Item 4.44 **Section 15960 – 1.04** – Add the following:

"F. Building Commissioning, Section 01810."

Item 4.45 **Section 17901-INSTRUMENT INDEX** – Add the following rows to the instrument index:

Drawing	Tag	Equipment/Location	Type	Specification	Range	Notes
8160A10-17-N-001.DWG	PI-17-102	PRELIMINARY TREATMENT ODOR CONTROL FAN NO. 2 SUCTION	PRESSURE INDICATOR	13329	0-10" WC	
8160A10-17-N-001.DWG	PI-17-103	PRELIMINARY TREATMENT ODOR CONTROL ATOMIZERS 3W LINE	PRESSURE INDICATOR	17404	0-100 PSI	
8160A10-17-N-001.DWG	PI-17-104	PRELIMINARY TREATMENT ODOR CONTROL ATOMIZERS 3W LINE	PRESSURE INDICATOR	17404	0-100 PSI	
8160A10-27-N-001.DWG	PI-27-102	FFR ODOR CONTROL ATOMIZERS 3W LINE	PRESSURE INDICATOR	17404	0-100 PSI	
8160A10-27-N-001.DWG	PI-27-103	FFR BIOFILTER 3W LINE	PRESSURE INDICATOR	17404	0-100 PSI	

Item 4.46 **Section 16342-2.04** – Add the following Item O:

"O. Protocol Converter:
1. Provide a protocol converter to allow remote communications with each relay via a single Modbus TCP over Ethernet connection."

Item 4.47 **Section 16920-3.05** – Add the following Item 3.05:

"3.05 Schedule: Provide pre-fabricated walk-in electrical enclosures at the following locations.
1. MCC-35 Enclosure, Drawing 35-E-03.
2. SWGR-2 Enclosure, Drawing 95-E-05."

Item 4.48 **Section 16990, Conduit Schedule** – The conduit schedule in excel format is available for download at the following link:

ftp://ftp.ci.san-leandro.ca.us/ you will need to use the following for your login and password once at the site:

login: wpcp password: slwpcp

Disclaimer:

Carollo Engineers, the OWNER and the ENGINEER assume no responsibility for electronic documents. Electronic documents are not Contract Documents. These electronic documents are being furnished as a convenience for information and background purposes only, without any guarantee as to hardcopy compatibility.

Item 4.49 **Section 17050-1.12.C** – Delete Item C.

Item 4.50 **Section 17050-3.02.D.6** – Delete Item 6.

Item 4.51 **Section 17762, Control Systems SCADA Software** – Delete this section in entirety and replace with the attached revised Section 17762.

Drawings

Item 4.52 **Drawing 00-G-02 –** Add the following drawing to the drawing index under the "STRUCTURAL" heading:

"172.01 00-S-02 1365.01 SPECIAL INSPECTION NOTES AND TABLES"

Item 4.53 **Drawing 00-G-04** – In the piping service abbreviations list, add the following:

"FS FIRE SERVICE"

Item 4.54 **Drawing 00-G-05** – Add Note 6. as follows:

"6. The Northern 120 ft of the on-site staging area will not be available to the contractor before September 2011."

Item 4.55 **Drawing 00-TF-01** – On Typical Detail F021, on table indicating top and bottom of Bay Mud elevations, delete row for "PRELIMINARY TREATMENT BIOFILTER FAN PAD".

Item 4.56 **Drawing 00-TM-01** – Add typical detail M310 on attached Sketch 4.01.

Item 4.57 **Drawing 01-D-08** – Add new Detail A/01-D-07A shown on attached Sketch 4.07.

Item 4.58 **Drawing 13-D-01** – Revise Key Note 3 text to read "PLUG WALL PENETRATION PER TYPICAL DETAIL S200, Drawing No. 00-TS-04."

Item 4.59 **Drawing 01-C-01** – Under "GENERAL NOTES", add general note 14 as follows:

"14. SPECIAL REQUIREMENTS FOR CONSTRUCTION NEAR ALAMEDA COUNTY FLOOD CONTROL DISTRICT (ACFCD) STORM DRAIN PIPING:

A. AN ENCROACHMENT PERMIT FROM THE ACFCD MUST BE ACQUIRED PRIOR TO COMMENCEMENT OF ANY WORK WITHIN THE ACFCD RIGHT-OF-WAY. WITHIN THE ACFCD RIGHT-OF-WAY, WORKMANSHIP, EQUIPMENT, AND MATERIALS SHALL CONFORM TO ACFCD STANDARDS AND SPECIFICATIONS.

B. CONTACT ACFCD INSPECTOR AT LEAST 10 WORKING DAYS IN ADVANCE OF ANY WORK IN THE VICINITY OF SD PIPING TO ARRANGE A DETAILED CONSTRUCTION AND INSPECTION SCHEDULE."

Item 4.60 **Drawing 01-C-12A** – Replace this drawing in its entirety with the attached revised drawing.

Item 4.61 **Drawing 01-C-13** – Replace this drawing in its entirety with the attached revised drawing.

Item 4.62 **Drawing 01-C-13A** – Replace this drawing in its entirety with the attached revised drawing.

Item 4.63 **Drawing 01-C-22** – At Profile A, add dimension lines and arrows between the bottom of the existing 66" SD pipe and the top of the new 12" SS pipe and an associated callout stating "6" CLEAR, MIN".

Item 4.64 **Drawing 01-C-22** – At Profile A, add dimension lines and arrows between the bottom of the existing 48" SD pipe and the top of the new 12" SS pipe and an associated callout stating "6" CLEAR, MIN".

Item 4.65 **Drawing 01-C-22** – At Profile A, add dimension lines and arrows between the bottom of the existing 12" SD pipe and the top of the new 12" SS pipe and an associated callout stating "12" CLEAR, MIN".

Item 4.66 **Drawing 01-C-34** – At Detail P, add dimension lines and arrows between the outside of new Manhole 29 and the outside of the existing 66" SD line and an associated callout stating "12" CLEAR, MIN". Add dimension lines and arrows between the outside of new Manhole 28 and the outside of the existing 48" SD line and an associated callout stating "2'-6" CLEAR, MIN".

Item 4.67 **Drawing 01-C-29** – Replace this drawing in its entirety with the attached revised drawing.

Item 4.68 **Drawing 95-A-01** – On the Room Finish Schedule, Room 950, Electrical Room, delete the word "PAINT" for the four walls of the Electrical Room and replace with "-".

Item 4.69 **Drawing 00-S-01** – Replace this drawing in its entirety with the attached revised drawing.

Item 4.70 **Drawing 00-S-02** – Add the attached new drawing 00-S-02.

Item 4.71 **Drawing 10-S-03** – At Top Plan C, revise callout at left hand side of drawing from "HINGED ALUM ACCESS HATCH (TYP OF 8)" to read "72" x 48" ALUM MEDIUM DUTY FLOOR ACCESS DOOR, DOUBLE LEAF (TYP OF 6)"

Item 4.72 **Drawing 10-S-03** – At Top Plan C, add a callout stating "36" x 36" ALUM MEDIUM DUTY FLOOR ACCESS DOOR, SINGLE LEAF (TYP OF 2)". Attach a leader line and arrow to the callout that points at the 3'-0" x 3'-0" access hatch.

Item 4.73 **Drawing 24-S-02** – Replace this drawing in its entirety with the attached revised drawing.

Item 4.74 **Drawing 24-S-05** – Revise Section H as shown on the attached Sketch 4.08.

Item 4.75 **Drawing 24-M-02** – Replace this drawing in its entirety with the attached revised drawing.

Item 4.76 **Drawing 24-M-03** – Revise Section D as shown on the attached Sketch 4.09.

Item 4.77 **Drawing 24-M-03** – Revise Section E as shown on the attached Sketch 4.10.

Item 4.78 **Drawing 01-E-03** – Revised drawing as shown on the attached Sketch 4.03.

Item 4.79 **Drawing 10-E-03** – Revised drawing as shown on the attached Sketch 4.02.

Item 4.80 **Drawing 35-E-03** – Add a leader line pointing at the enclosure surrounding the electrical and instrumentation equipment and attach the callout "PREFABRICATED WALK-IN ELECTRICAL ENCLOSURE PER SECTION 16920."

Item 4.81 **Drawing 95-E-03** – Add a leader line pointing at the enclosure surrounding the electrical and instrumentation equipment and attach the callout "PRE-FABRICATED WALK-IN ELECTRICAL ENCLOSURE PER SECTION 16920."

Item 4.82 **Drawing 00-N-07** – Replace this drawing in its entirety with the attached revised drawing.

Item 4.83 **Drawing 90-A-12, Detail A- Roof Plan** – Between Grid Lines 1 and 10 revise the notes " 1/4" PER FT. TYP. SLOPE" to read " 1/2" PER FT. TYP. SLOPE". Revise width of crickets to approximately 10 feet in width to achieve approximately 1/8" per foot slope in the cricket valley.

Item 4.84 **Drawing 90-A-24, Detail C - EAST** – Add Semi-Recessed paper towel dispenser and waste receptacle to EAST wall between door and sink. Add surface-mounted soap cartridge dispenser in wall tile area above counter.

Item 4.85 **Drawing 90-A-24, Detail C – WEST – Sink Area**– Delete Semi-Recessed paper towel dispenser and waste receptacle from WEST wall. Add surface-mounted soap cartridge dispenser in wall tile area above counter.

Item 4.86 **Drawing 90-A-24, Detail C – SOUTH – Sink Area**– Delete soap dispensers (2) at mirror. Delete recessed seat cover dispenser at non-accessible toilet compartment.

Item 4.87 **Drawing 90-A-24, Detail C – SOUTH – Non-accessible Toilet compartment -** Add Women's Combination Seat Cover Dispenser, Napkin Disposal, Toilet Tissue Dispenser at wall of non-accessible toilet compartment.

Item 4.88 **Drawing 90-A-24, Detail C – WEST – Accessible toilet compartment**– Change Recessed Seat Cover Dispenser to Surface Mounted Seat Cover Dispenser.

Item 4.89 **Drawing 90-A-26, Detail A - NORTH** – Delete soap dispensers (4) at mirror.

Item 4.90 **Drawing 90-A-26, Detail A - EAST** – Add surface-mounted soap cartridge dispenser at wall area above counter.

Item 4.91 **Drawing 90-A-26, Detail A - SOUTH**– Delete recessed seat cover dispensers (2) at non-accessible toilet compartments. Add Men's Combination Seat Cover Dispenser, Toilet Tissue Dispenser in partition between non-accessible toilet compartments.

Item 4.92 **Drawing 90-A-26, Detail A - WEST** – Add surface-mounted soap cartridge dispenser at wall area above counter.

Item 4.93 **Drawing 90-A-27 Detail B - SOUTH** – Add surface-mounted soap cartridge dispenser. Location to be determined by ENGINEER.

Item 4.94 **Drawing 90-A-27 Detail C – NORTH, SOUTH AND WEST** – Add surface-mounted soap cartridge dispensers at each shower head (4) total. Locations to be determined by ENGINEER.

Item 4.95 **Drawing 90-A-28 Detail A – NORTH**– Add surface-mounted soap cartridge dispensers at each accessible shower (2) total. Locations to be determined by ENGINEER.

Item 4.96 **Drawing 90-A-28 Detail B - SOUTH** – Replace note "Soap Dispenser" with note " Surface-mounted Soap Cartridge Dispenser". Delete recessed seat cover dispenser.

Item 4.97 **Drawing 90-A-28 Detail B - WEST** – Delete surface mounted toilet paper dispenser. Add Women's Combination Seat Cover Dispenser, Napkin Disposal, Toilet Tissue Dispenser behind 42" grab bar.

Item 4.98 **Drawing 90-A-34, Detail 1** – Revise note "New Roof Assembly at Existing Deck:" to read as follows:
"SINGLE PLY ROOF MEMBRANE
1/2" PROTECTION BOARD
SLOPED RIGID INSULATION OVER UNIFORM 1" RIGID INSULATION

(AVERAGE R-30 MIN. INSULATION.)"

Item 4.99 **Drawing 90-S-03, Detail 5** -- Add knife plate thickness as follows:

Revise note from "Knife PL" to "KNIFE PL 1/2"."

Item 4.100 **Drawing 90-S-06, Detail 1** – Clarify blocking size as follows:

Revise note from "3 ½" PSL blkg shown See plans for actual size" to "3 ½" PSL BLKG SAME DEPTH AS JOIST TYP UON SEE PLANS"

Item 4.101 **Drawing 90-S-07, Detail 8** -- Revise note to detail as follows:

Revise note from "2 Rows PW EN staggered" to "2 ROWS PW EN STAGGERED OMIT WHERE COLLECTOR STRAP OCCURS"

Item 4.102 **Drawing 90-S-17, Detail 5** - Delete Detail 5 and replace with the revised detail shown on the attached Sketch 4.04.

Item 4.103 **Drawing 90-S-18, Detail 7** -- Delete Detail 7 and replace with the revised detail shown on the attached Sketch 4.05.

Item 4.104 **Drawing 90-S-020, Detail 8** – Revise note to detail as follows:

Revise note from "4-1/4" □ x 6" long SDS ES" to "4-1/4" □ x 6" LONG SDS @ 3" OC INTO EA NAILER".

Item 4.105 **Drawing 90-S-21, Detail 3** -- Delete Addendum No. 1 Sketch 1.03 and replace with the revised detail shown on the attached Sketch 4.06.

Item 4.106 **Drawing 90-PD-07** – At Detail 4/90-PD-07, delete note "FEBCO 8556 DOUBLE CHECK DETECTOR ASSEMBLY" and replace with "REDUCED PRESSURE PRINCIPLE BACKFLOW PREVENTER FOR FIRE SERVICE PREAPPROVED BY EBMUD."

ATTACHMENTS:

The following Attachments are appended to Addendum No. 4:

1. Specifications:
    a. Section 00800 Part 2 – Updated Wage Determination CA100029 dated 3/18/2011.
    b. Section 07905, Steel Dome Digester Cover Annular Seal.
    c. Section 10260, Wall and Corner Guards.
    d. Section 17762, Control Systems SCADA Software.

2. Drawings:
    a. 01-C-12A, Yard Piping Plan – Area 5.
    b. 01-C-13, Yard Piping Plan – Area 6.
    c. 01-C-13A, Yard Piping Plan – Area 6.
    d. 01-C-29, Yard Piping – Manhole Sections and Details
    e. 00-S-01, General Structural Notes.
    f. 00-S-02, Special Inspection Notes and Tables.
    g. 24-S-02, Fixed Film Reactor Lift Station – Top Plan.
    h. 24-M-02, Fixed Film Reactor Lift Station – Top Plan.
    i. 00-N-07, SCADA System Block Diagram.
3. Sketches:
    a. 4.01 – Drawing 00-TM-02.
    b. 4.02 – Drawing 10-E-03.
    c. 4.03 – Drawing 01-E-03.
    d. 4.04 – Drawing 90-S-17.
    e. 4.05 – Drawing 90-S-18.
    f. 4.06 – Drawing 90-S-21.
    g. 4.07 – Drawing 01-D-08.
    h. 4.08 – Drawing 24-S-05.
    i. 4.09 – Drawing 24-M-03.
    j. 4.10 – Drawing 24-M-03.

PLEASE NOTE:

The Bid Opening Date Remains Tuesday, April 5, 2011 at 3:00 P.M.

Acknowledge this addendum and include a signed copy of the Acknowledgement Form in your Proposal. If you have any questions, please call the Project Engineer, Kevin Chun, at 577-3412.

Very truly yours,

Kenneth Joseph, P.E., City Engineer
Engineering and Transportation Department
kjoseph@sanleandro.org
www.sanleandro.org

KJ:tar

ACKNOWLEDGEMENT ADDENDUM NO. 4

(Include a signed copy of this form in your proposal)

I hereby acknowledge receipt of this Addendum for the above noted project.

_____ Date: _____
(Signature)

_____
(Business Name – Please Print)

cc: Internal Plans & Specs Distribution List
COSL Current Plan-holders

SECTION 07905

STEEL DOME DIGESTER COVER ANNULAR SEAL

PART 1 GENERAL

1.01 SUMMARY

A. Section includes: Annular seal for steel digester dome.

1.02 REFERENCES

A. ASTM International (ASTM):

1. D 412 - Standard Test Methods for Vulcanized Rubber and Thermoplastic Elastomers - Tension.

2. D 1621 - Standard Test Method for Compression Properties of Rigid Cellular Plastics.

3. D 1622 - Standard Test Method for Apparent Density of Rigid Cellular Plastics.

1.03 SUBMITTALS

A. Product data.

B. Samples, include color selections.

C. Manufacturer's installation instructions.

D. Warranty.

1.04 QUALITY ASSURANCE

A. Manufacturer qualifications: Manufacturer of proposed product for minimum 5 years with satisfactory performance record.

B. Installer qualifications: Manufacturer-approved installer of products similar to specified products on minimum 3 projects of similar scope as Project with satisfactory performance record.

1.05 PROJECT/SITE CONDITIONS

A. Environmental requirements:

1. Do not apply foam on wet or frosty surfaces or when surface temperature is higher than 120 degrees or lower than 40 degrees Fahrenheit.

2. Foam shall not be applied when relative humidity is above 85 percent.

3. Foam shall not be applied when wind velocities exceed 15 miles per hour, as measured by a wind velometer, unless suitable wind barriers are employed.

4. No foam shall be applied if the surface temperature is within 5 degrees Fahrenheit of the dew point.

1.06 DELIVERY, STORAGE, AND HANDLING

A. Deliver, store, and handle products in accordance with manufacturer's recommendations.

B. Code date packages:

1. Do not use material older than 6 months old.

2. Store materials at temperatures lower than 80 degrees Fahrenheit.

1.07 WARRANTY

A. Warrant to correct defective products for minimum 5 years in accordance with manufacturer's standard warranty.

PART 2 PRODUCTS

2.01 MATERIALS

A. Low density spray applied polyurethane foam:

1. Manufacturers: One of the following or equal:

a. UCSC, SHS II 0.5.

b. BASF, equivalent product.

2. Characteristics:

a. Density of 0.5 pound per cubic foot when tested in accordance with ASTM D 1622.

b. Compressive strength of 1 pounds per square inch or less when tested in accordance with ASTM D 1621.

c. Spray-in-place open cell polyurethane foam.

B. Elastomeric polyurea:

1. A high elongation, hydrophobic, chemical resistance, sprayed polyurea elastomer.

2. Manufacturers: One of the following or equal:

a. Specialty Products, Inc. (SPI),

1) Polyshield Hi-E.

2) Watershield III.

3. Characteristics:

a. 100 percent solids, no solvents, and no VOCs.

b. High temperature stability up to 200 degrees Fahrenheit.

c. Tensile strength: 2,000-pounds per square inch minimum when tested in accordance to ASTM D 412.

d. Elongation: 600 percent minimum at 77 degrees Fahrenheit.

e. Hardness (Shore A): 35 minimum.

f. Tear resistance: 300 pounds per lineal inch minimum.

g. Compatibility with other materials in joint and acceptance by manufacturer of polyurethane packaging foam.

h. UV inhibited formulation for stand-alone applications.

PART 3 EXECUTION

3.01 EXAMINATION

A. Verify that surfaces are dry, clean, and free of loose particles, rust scale, grease, dirt, laitance, or other contaminants that might interfere with adhesion of the products specified.

3.02 PREPARATION

A. Elastomeric polyurea:

1. Ensure surfaces to which the polyurea must bond are dry and free of dust, dirt, and other foreign residue.

   a. A primer may be required, subject to type and/or condition of substrate.

2. If digester cover is scheduled to be coated, verify that the coating is compatible with the polyurea.

3.03 INSTALLATION

A. Low-density spray applied polyurethane packaging foam: Install foam in accordance with manufacturer's installation instructions.

B. Elastomeric polyurea:

1. Install elastomeric polyurea in accordance with manufacturer's installation instructions.

2. Spray polyurea with recommended equipment settings.

3. Employ experienced applicators to spray the polyurea.

4. Use backer rod or tape to bridge the bottom gap between the concrete wall and the steel retainer as indicated on the Drawings.

5. Seal the top gap after the low-density polyurethane foam is cured.

3.04 CLEANING

A. Clean surfaces adjacent to the polyurea as work progresses.

B. Leave finished work in neat and clean condition.

3.05 SCHEDULE

A. Polyurethane foam:

1. Use where indicated on the Drawings.

B. Elastomeric polyurea:

1. Use where indicated on the Drawings.

END OF SECTION

SECTION 10260

WALL AND CORNER GUARDS

PART 1 GENERAL

1.01 SUMMARY

A. Section Includes (Administration Control Building only): Corner guards and mounting accessories, complete.

B. Related Sections:
   1. Section 09100 - Metal Support Systems: Backing plates.
   2. Section 09250 - Gypsum Board.

1.02 SUBMITTALS

A. Shop Drawings: Submit shop drawings showing locations of brackets and end joints of wall guard. Submit manufacturer's installation instructions showing rough-in measurements and instructions.

B. Product Data and Samples: Submit for review if the product to be furnished is not the exact product specified.

C. Certificates: Submit manufacturer's certificate stating that products comply with the requirements for UL rating and flammability.

D. LEED Submittals:
   1. Credit EQ 4.1 - Low-Emitting Materials, Adhesives and Sealants: Manufacturers' product data for adhesives, including printed statement of VOC content.

1.03 QUALITY ASSURANCE

A. Regulatory Requirements:
   1. Fire Ratings: Provide materials tested and classified by Underwriters Laboratory for use in rated wall construction.

PART 2 PRODUCTS

2.01 CORNER GUARDS

A. Surface-mounted stainless steel corner guards:
   1. Manufacturer: Construction Specialties "Acrovyn CO-8 Series"; Pawling; or equal.
   2. Material: Type 304 stainless steel.
   3. Size: 3-1/2 x 3-1/2 inch legs x 4 feet high.
   4. Fire Rating: UL labeled Class 1 flame spread rating.

5. Finish: #4 brushed satin.

B. Adhesive: Water-resistant type, low VOC-emitting, as recommended by manufacturer.
   1. Use gypsum board and panel adhesive with a maximum 50 g/L VOC content when calculated according to 40 CFR 59, Subpart D.

PART 3 EXECUTION

3.01 EXAMINATION

A. Examine the conditions and substrate in which the wall and corner guards are to be installed. Do not proceed until unsatisfactory conditions have been corrected.

3.02 INSTALLATION

A. Corner Guards: Install in locations shown and as directed by Architect in accordance with the manufacturer's instructions. Secure corner guards to substrate with full bedding of adhesive as recommended by manufacturer.

END OF SECTION

SECTION 17762

CONTROL SYSTEMS SCADA SOFTWARE

PART 1 GENERAL

1.01 SUMMARY

A. Section includes requirements for:

1. SCADA system software to be used for application software development and real time operation of the SCADA system.

B. Related sections:

1. The Contract Documents are complementary; what is called for by one is as binding as if called for by all.

2. It is the CONTRACTOR's responsibility for scheduling and coordinating the Work of subcontractors, suppliers, and other individuals or entities performing or furnishing any of CONTRACTOR's Work.

3. The following sections are related to the Work described in this Section. This list of related sections is provided for convenience only and is not intended to excuse or otherwise diminish the duty of the CONTRACTOR to see that the completed Work complies accurately with the Contract Documents.

a. Section 01330 - Submittal Procedures.

b. Section 17050 - Common Work Results for Process Control and Instrumentation Systems.

c. Section 17100 - Control Strategies.

d. Section 17761 – Control Systems - PLC Programming Software.

e. Section 17950 - Testing, Calibration, and Commissioning.

C. General requirements:

1. Software provided under this Contract represent a complete and operating control software system. Achieve the functionality described in this and other sections through a combination of standard control system software and application software developed specifically for this project.

2. Provide all necessary supplemental drivers, utility software and application software, as required, to meet the functional requirements of the Specifications.

3. Applications software requirements are described in Section 17100.

4. License any software provided under this Contract to the OWNER.

D. Provide copies of all software on CD, or equivalent media.

1.02 REFERENCES

A. Refer to Section 17050.

1.03 DEFINITIONS

A. Refer to Section 17050.

1.04 SYSTEM DESCRIPTION

A. General:

1. The CONTRACTOR shall utilize existing SCADA software licenses to implement the functions required by the Contract Documents, including but not limited to SCADA screens, storage and trending of historical data, and generation of reports.

a. System Configuration:

1) The system consists of existing primary and backup data server/client machines configured for hot failover operation. These machines are equipped with I/O drivers from communicating with networked PLCs and are also full client machines that monitor the status of the servers and re-establish data connections with a new server in case the primary server fails.

1.05 SUBMITTALS

A. Furnish submittals in accordance with Sections 01330 and 17050.

B. Remote Alarm Database:

1. After development of the SCADA system database but before system start up, provide a list of points configured for alarming and submit to the OWNER and the ENGINEER. The OWNER/ENGINEER will identify critical alarms for use in the extended alarming system (e.g. dialer system, paging) and provide response descriptions.

C. Alarm descriptions shall be of sufficient detail for an accurate review by the OWNER.

D. After all shop drawings submittals required herein, have been favorably reviewed by the ENGINEER, the CONTRACTOR shall submit the following items, which must also be favorably reviewed and implemented prior to the start of system testing, the entire control system including all required software packages must be operational prior to the required Factory Acceptance Test:

1. All operator interface display submittals shall be in full color as they will appear on the display screen:

   a. This submittal shall be prepared after the requisite Graphics Meetings.

   b. The submittal shall include:

      1) Graphic displays.

      2) Trend displays.

      3) Alpha numeric displays.

      4) Alarm displays.

2. Each display shall be uniquely titled:

   a. Locations for process data shall be clearly identified either through the use of simulated data or by showing variables on the displays and providing a reference list describing those variables.

   b. All dynamic points shall be identified by tag number as a minimum and their operation shall be described on separate sheets:

      1) Color change.

      2) Symbol change.

   c. Three sets of submittals, with screen prints in color on a white background, are required for review by the OWNER and ENGINEER.

   d. One set will be returned with comments.

3. All periodic and custom reports for the entire control system:

   a. Locations for process data shall be clearly identified, either through the use of simulated data or by showing variables on the report and providing a reference list describing those variables.

b. Three sets of reports shall be submitted for review by the ENGINEER.

c. One set will be returned with comments.

E. Pre-acceptance test documentation in accordance with paragraph 1.09 of this Section.

F. Operator's Reference Manual:

1. The CONTRACTOR shall prepare and submit a user reference manual for the operator interface system for use by the operators. This manual shall be bound in a three ring binder and meet the following minimum requirements:

a. An index to the manual.

b. A list of operator interface:

1) Display screens.

2) Trends.

3) Reports.

4) With display name and description.

c. A summary of all possible commands and operator inputs to these screens including set points:

1) All control actions shall be included.

d. A Control System Block Diagram with names and locations of major components.

e. Instructions for manually printing screens or reports.

1) Real time.

2) Historical.

f. A summary of security levels and their privileges and limitations.

g. Spaces for operators to make notes.

2. A copy of this manual shall be provided to each operator during training on the operator interface operations:

   a. The training class shall include a review of this manual with the operators in addition to more detailed instruction on the operator interface configuration and its use.

G. Review Meeting Minutes Submittals:

1. Graphics review meeting:

   a. Minutes of Graphic Review Meeting No. 1.

   b. Minutes of Graphic Review Meeting No. 2.

2. Report review meeting:

   a. Minutes of Report Review Meeting No. 1.

   b. Minutes of Report Review Meeting No. 2.

3. Alarm review meeting:

   a. Minutes of Alarm Review Meeting No. 1.

   b. Minutes of Alarm Review Meeting No. 2.

1.06 QUALITY ASSURANCE

A. Refer to Section 17050.

B. The manufacturer must have a formal and documented set of quality assurance procedures that are applied to the engineering design, development, and documentation of the software:

1. The presence of a formal quality assurance department is required.

C. Software provided under this Section shall be included in the testing specified in Section 17950.

1.07 SEQUENCING

A. The following items shall be submitted with the final sets of technical manuals required in accordance with paragraph 1.05 of this Section, 15 working days before the Pre-commissioning Test as specified in Section 17050:

1. All program manuals supplied by the manufacturers with the standard software packages.

2. All original program disks supplied by the manufacturers with the standard software packages, including any program revisions or updates issued by the manufacturers during the construction period.

3. All PLC program and operator interface application program files stored on labeled disks:

   a. The PLC program and operator interface application program file disks shall also be updated as required if any changes or corrections are required in this programming before project completion.

B. Operator Interface Graphics Generation:

1. The CONTRACTOR shall schedule the Operator Interface Graphics Meetings.

2. Topics shall include graphics for:

   a. HMI graphics.

   b. Data Acquisition and Graphics Display System.

3. The OWNER and ENGINEER shall attend these meetings.

4. Graphics Meeting No. 1 – held in conjunction with the Preliminary Meeting as referenced in Section 17050:

   a. The CONTRACTOR shall chair and develop an agenda, three weeks in advance of the meeting, which shall address the basic criteria to be adhered to in the configuration and development of graphic displays:

      1) At this meeting the CONTRACTOR shall distribute sample display formats for illustration purposes.

      2) As a minimum, this meeting shall address the following issues:

         a) All in plant and remote site areas and conventions for identifying tag names and descriptors.

b) Designation of groups within each plant area along with tag names and descriptors.

c) The assignment of individual control loops and inputs to specific groups.

d) Organization of the systems universal display hierarchy.

e) Paging schemes to be used to enable the movement from one display to another.

f) An itemization of the type of display to be used at each level in the graphic hierarchy, i.e. pre-formatted displays, templates, custom graphics, etc.

g) Color convention to be employed on all graphics for the annotation of various status information, differentiation between alarms based on alarm priority, background colors, static field colors and dynamic field colors.

h) The utilization of blinking and conditional text.

i) Definition of graphic symbolism to be used on the project. This listing shall include but not be limited to symbols to be used for process instrumentation, process equipment, piping, vessels and valves:

   (1) All symbolism must be specific as opposed to generic in that shapes must define both function and type i.e. specific symbols for each valve design, each pump design, each type of flowmeter, etc.

   (2) If the CONTRACTOR's library of shapes does not adequately describe plant or field conditions, the CONTRACTOR shall develop additional shapes to meet the plant or field requirements.

   (3) Shapes and symbols used on the P&IDs shall be used as a guideline.

j) Definition of all display select commands that enable the operator to move within the display hierarchy.

k) The utilization of cursor movement commands which enable the operator to move within a display.

l) Definition of control input commands which enable the operator to interact with face plates control stations and custom graphic displays to implement control functions.

m) Definition of data input commands which enable the operator to enter numeric values into the Control System.

n) Definition of the utilization of "poke" points or fields that are dynamically sensitive to operator inputs to facilitate operator entry directly into graphic displays.

o) A review of graphic generation procedures.

b. Subsequent to the adjournment of graphics meeting No. 1 the CONTRACTOR shall prepare and formalize a document titled "GRAPHICS CRITERIA" which shall contain detailed meeting minutes and a definition of all graphic guidelines to be adhered to:

1) This report shall be supplemented by graphic examples which illustrate the incorporation and application of each graphic criteria.

2) The report shall be submitted within 30 calendar days of the meeting's adjournment.

5. Graphics Meeting No. 2 – held in conjunction with the Intermediate Review Meeting as referenced in Section 17050:

a. Subsequent to the finalization of the overall system-wide graphics criteria, the CONTRACTOR shall develop graphic packages for the entire operator interfaces being furnished under this project.

b. At this meeting the CONTRACTOR shall submit 5 copies including:

1) A review of the graphic package developed for the process areas for content and completeness.

2) A review of all data fields that display automatically updated process information.

3) A review of all required input commands associated with the graphic access and control manipulation.

c. Subsequent to the adjournment of Graphics Meeting No. 2 the CONTRACTOR shall prepare a formalized submittal of the graphic package for review along with the detailed meeting minutes:

1) The report shall be submitted within 30 calendar days of the meeting adjournment.

6. 10 additional displays shall be configured on-line during the Pre-commissioning Test period.

C. Report Generation:

1. The CONTRACTOR shall schedule the Report Generation Meetings.

2. The OWNER and ENGINEER shall attend these meetings.

3. Reports Meeting No. 1 – held in conjunction with the Preliminary Meeting as referenced in Section 17050:

a. The CONTRACTOR shall chair and develop an agenda, 3 weeks in advance for a meeting, which shall address the basic criteria to be adhered to in the configuration and development of the reports:

1) At this meeting the ICSC shall distribute sample formats for illustration purposes.

2) As a minimum, this meeting shall address the following issues:

a) All in-plant and remote site data and conventions for identifying tag names and descriptors.

b) Designation of groups within each plant area along with tag names and descriptors.

c) The assignment of inputs to specific categories.

d) Organization of the systems universal report categories.

e) An itemization of the type of report available.

f) Definition of terms to be used on the reports.

g) Definition of all report commands that enable the operator to move within the report editor.

h) The utilization of cursor movement commands which enable the operator to move within a report.

i) Definition of data input commands which enable the operator to enter numeric values into the system.

j) A review of report generation procedures.

3) Subsequent to the adjournment of the Report Meeting No. 1 the CONTRACTOR shall prepare and formalize a document titled "REPORT CRITERIA" which shall contain detailed meeting minutes and a definition of all report guidelines to be adhered to:

a) This report shall be supplemented by report examples.

b) The report shall be submitted within 30 calendar days of the meeting's adjournment.

4. Reports Meeting No. 2 – held in conjunction with the Intermediate Review Meeting as referenced in Section 17050:

a. Subsequent to the finalization of the overall report format criteria, the CONTRACTOR shall develop report packages for review.

b. At this meeting the CONTRACTOR shall submit 5 copies including:

1) A review of the report package developed for the process area(s) for content and completeness.

2) A review of all data fields for process information.

3) A review of all required input commands associated with the report access and control manipulation.

c. Subsequent to the adjournment of Report Meeting No. 2 the ICSC shall prepare a formalized submittal of the report package for review along with the detailed meeting minutes:

1) The report shall be submitted within 30 calendar days of the meetings adjournment.

5. 10 additional reports shall be configured on-line during the Pre-commissioning Test period.

D. Alarming Priority:

1. The CONTRACTOR shall schedule the Alarming Priority Meetings.

2. The OWNER and ENGINEER shall attend these meetings.

3. Alarming Priority Meeting No. 1 – held in conjunction with the Preliminary Meeting as referenced in Section 17050:

   a. The CONTRACTOR shall chair and develop an agenda, 3 weeks in advance for a meeting, which shall address the basic criteria to be adhered to in the prioritization of alarms:

      1) At this meeting the CONTRACTOR shall distribute a listing of all plant alarms identified by tag names and descriptors.

      2) As a minimum, this meeting shall address the following issues:

         a) Criteria for prioritizing alarms including alarming priority levels. (i.e. Priority 3 - alarm at SCADA; Priority 2 – alarm at SCADA and autodialer; Priority 1 – alarm at SCADA, autodialer, and plant shutdown.)

         b) Alarm display banner basic criteria.

      3) Subsequent to the adjournment of the Alarming Priority Meeting No. 1, the CONTRACTOR shall prepare and formalize a document titled "ALARM CRITERIA" which shall contain detailed meeting minutes and a definition of all alarming guidelines to be adhered to:

         a) The report shall be submitted within 30 calendar days of the meeting's adjournment.

4. Alarming Priority Meeting No. 2 – held in conjunction with the Intermediate Review Meeting as referenced in Section 17050:

   a. Subsequent to the finalization of the overall alarm criteria, the CONTRACTOR shall develop an alarming priority spreadsheet that will be populated at this meeting.

   b. At this meeting the CONTRACTOR shall provide a spreadsheet including:

      1) A listing of all plant alarms identified by tag names and descriptors.

      2) For each alarm listed include a location to enter the alarm priority assignment.

      3) For each alarm listed include a location to enter specific comments related to that alarm.

c. Subsequent to the adjournment of Alarming Priority Meeting No. 2 the ICSC shall prepare a formalized submittal of the alarming priority spreadsheet for review along with the detailed meeting minutes:

1) The spreadsheet and meeting minutes shall be submitted within 30 calendar days of the meetings adjournment.

1.08 WARRANTY

A. As specified in Section 17050.

PART 2 PRODUCTS

2.01 EXISTING PRODUCTS

A. The plant has existing licenses for the following software:

1. Citect SCADA, Version 7.2 (1500 points).
2. Citect Historian, Version 4.2.
3. Wonderware SCADAlarm 6.0.

2.02 MANUFACTURED UNITS

A. General:

1. Turn any software installed on the workstations over to the OWNER with disks, keys and manuals.

PART 3 EXECUTION

3.01 INSTALLATION

A. As specified in Section 17050.

B. Install all required software improvement modules (SIMs). At the completion of the project, and provide installation disk(s) containing all SIMs used on the project to the OWNER.

3.02 FIELD QUALITY CONTROL

A. Test all software provided as part of this Section as part of the system tests specified in Section 17950.

3.03 DEMONSTRATION AND TRAINING

A. As specified in Section 17050.

END OF SECTION

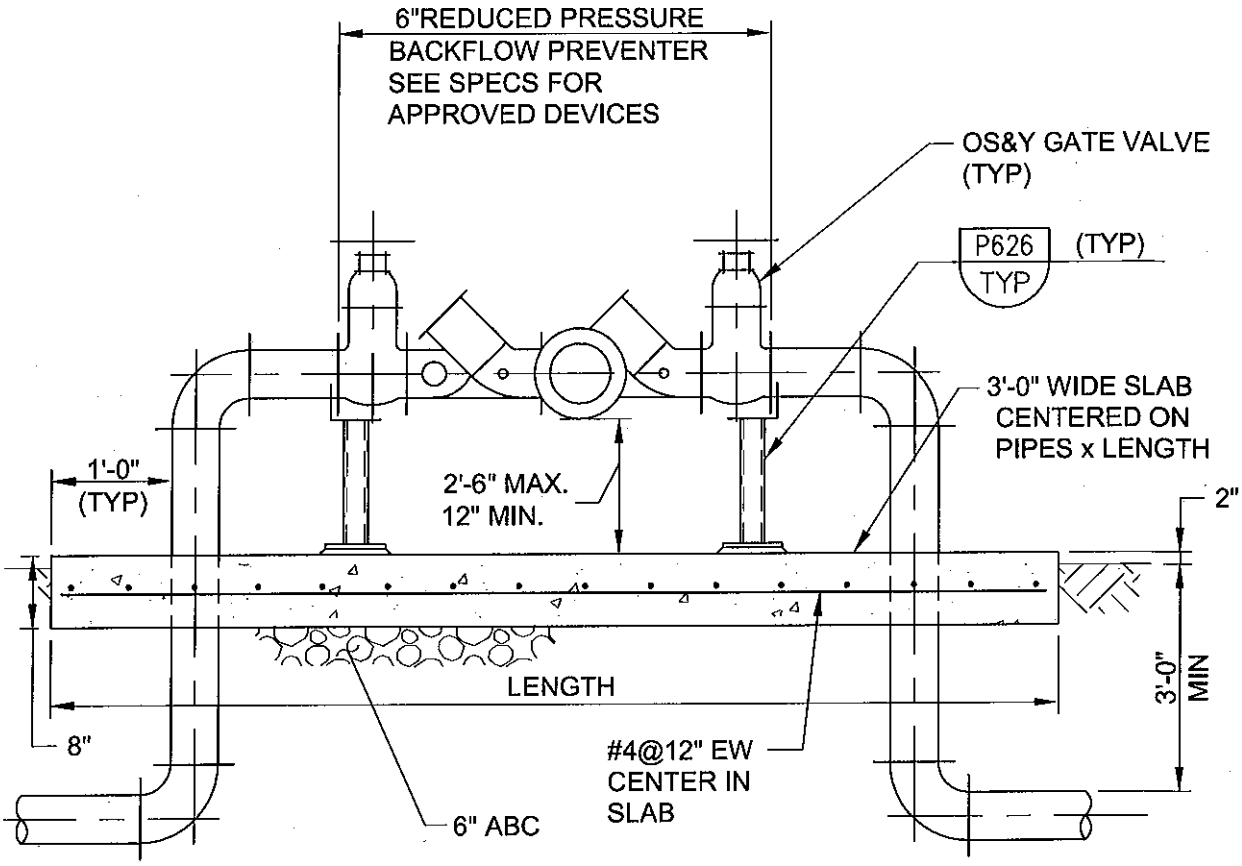

NOTES:

1. RISER PIPES AND FITTINGS SHALL BE DUCTILE IRON.
2. PROVIDE ALL SST HARDWARE.
3. RESTRAIN ALL JOINTS AND FITTINGS.

M310 TYP J

REDUCED PRESSURE BACKFLOW PREVENTER

03-23-11

SKETCH 4.01 - DRAWING 00-TM-02

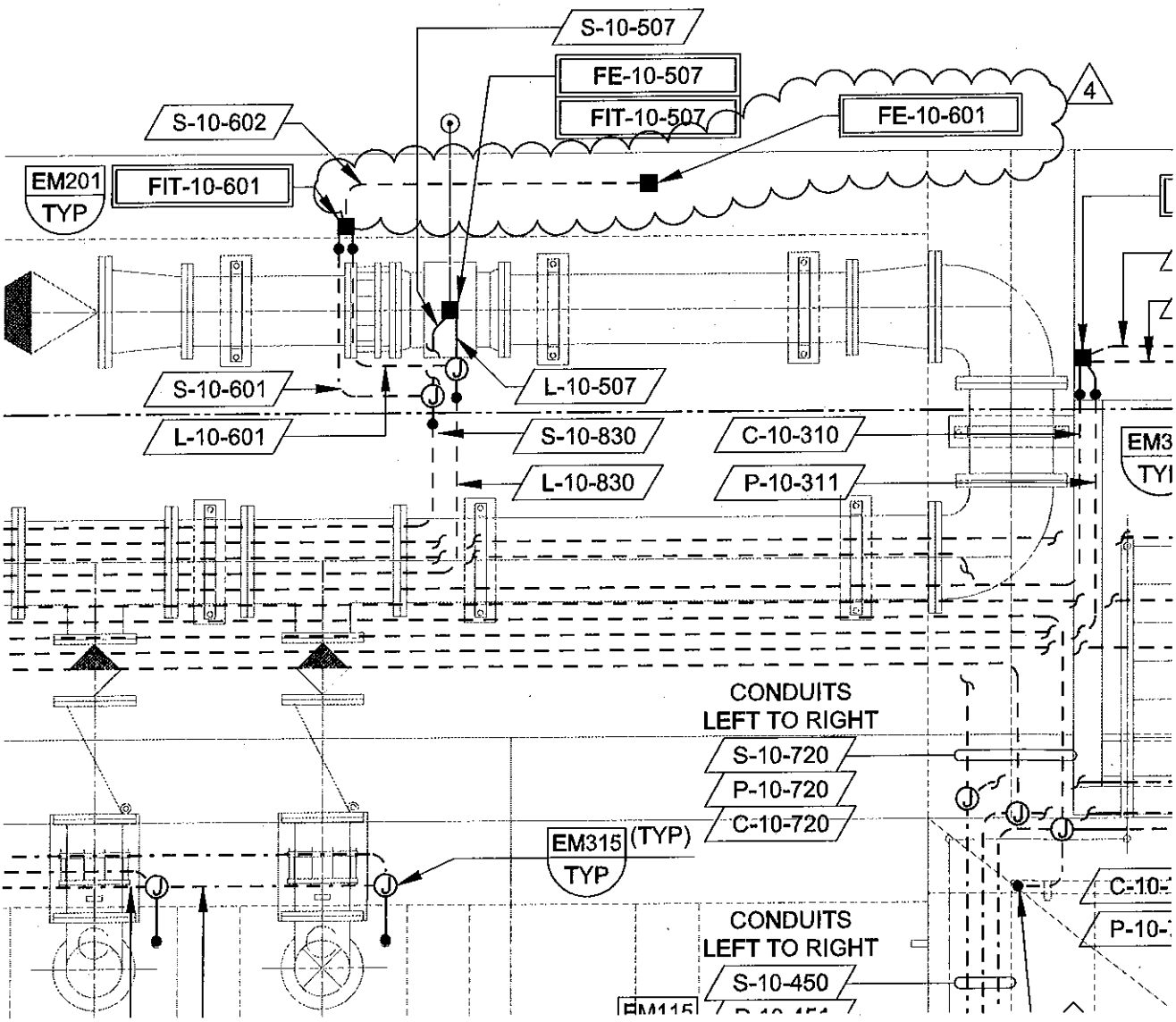

SKETCH 4.02 - DRAWING 10-E-03

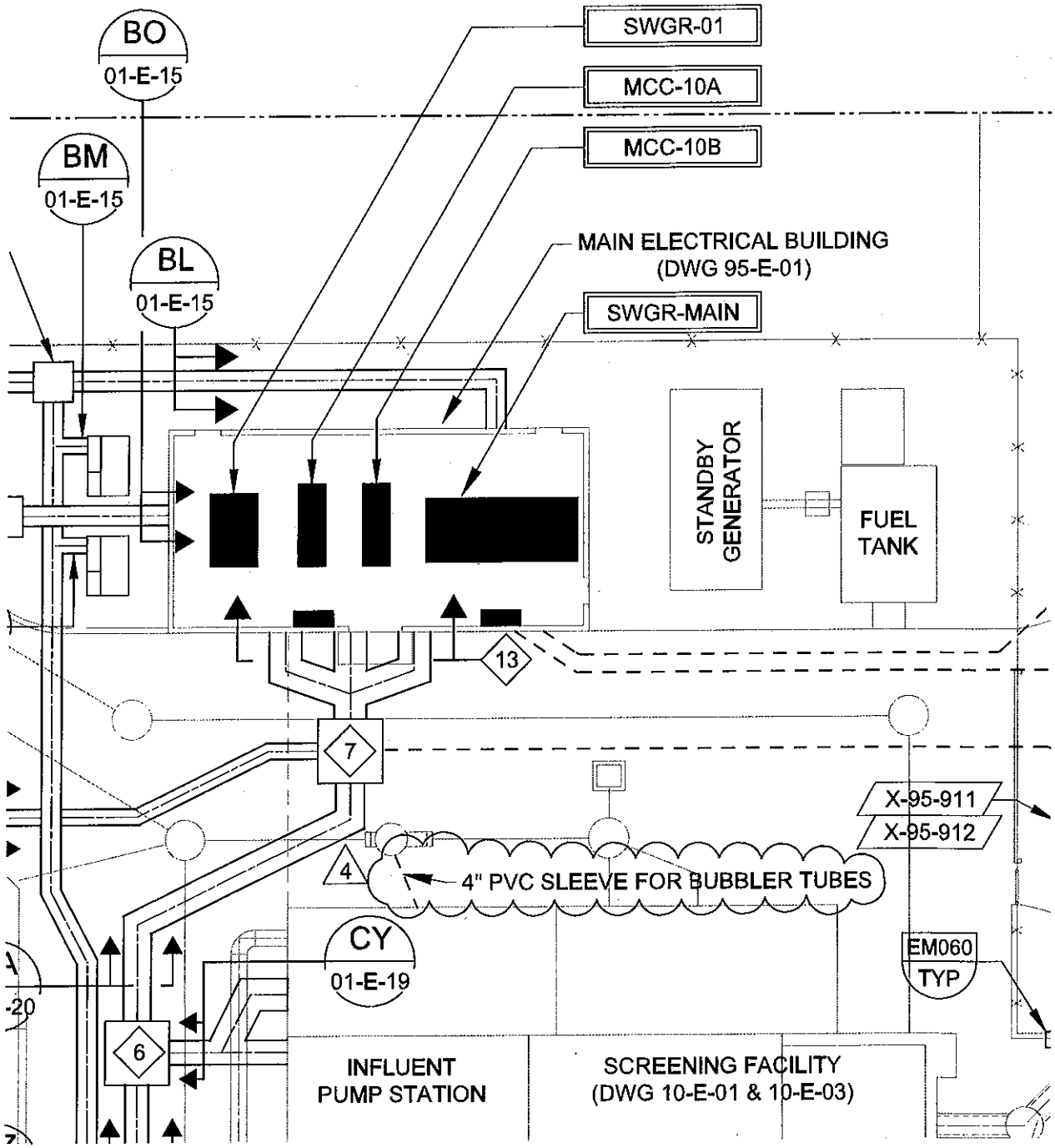

SKETCH 4.03 - DRAWING 01-E-03

Sketch 4.04 **Drawing 90-S-17, Detail 5**

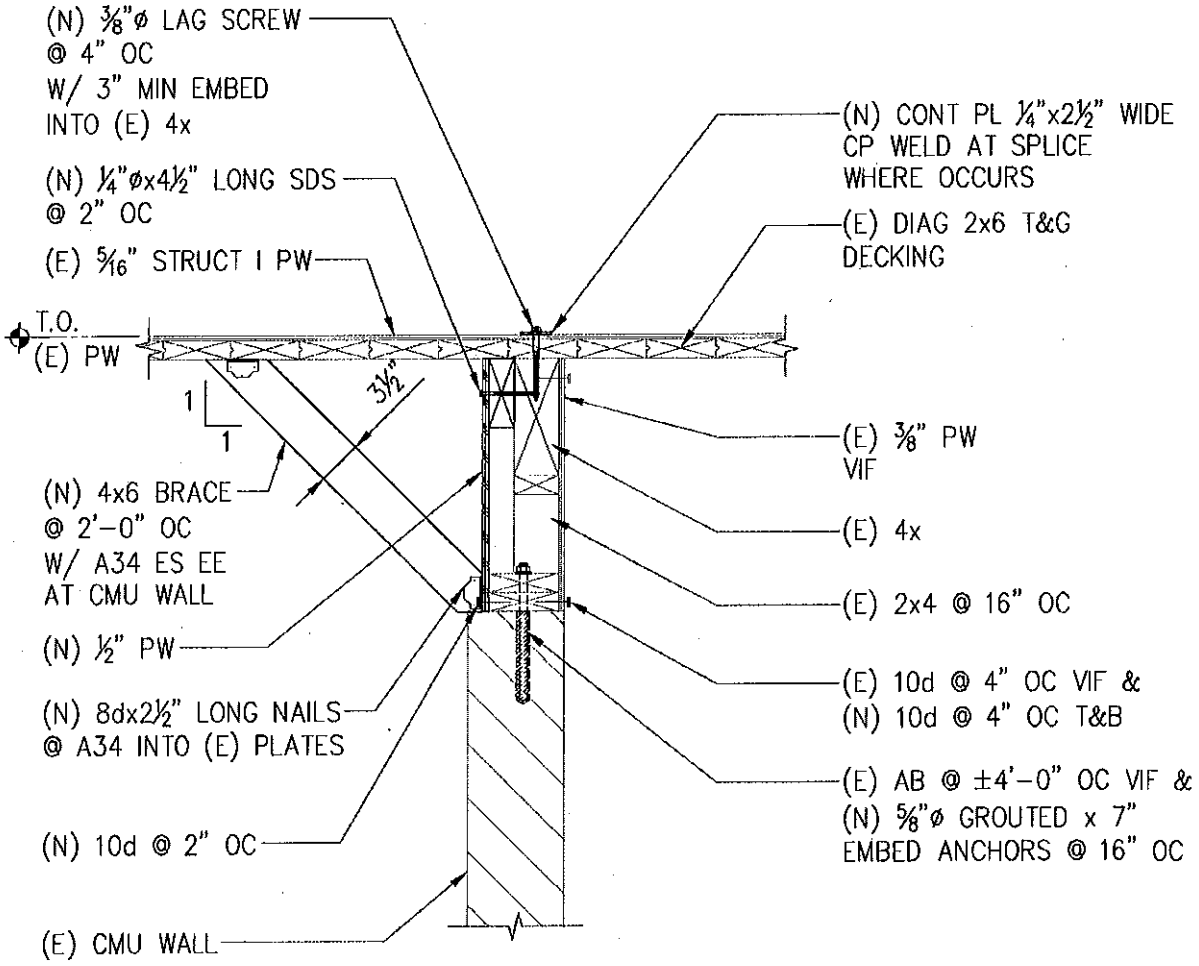

5 / 90-S-10 **SECTION**

SCALE: 3/4"=1'-0"

Sketch 4.05 **Drawing 90-S-18, Detail 7**

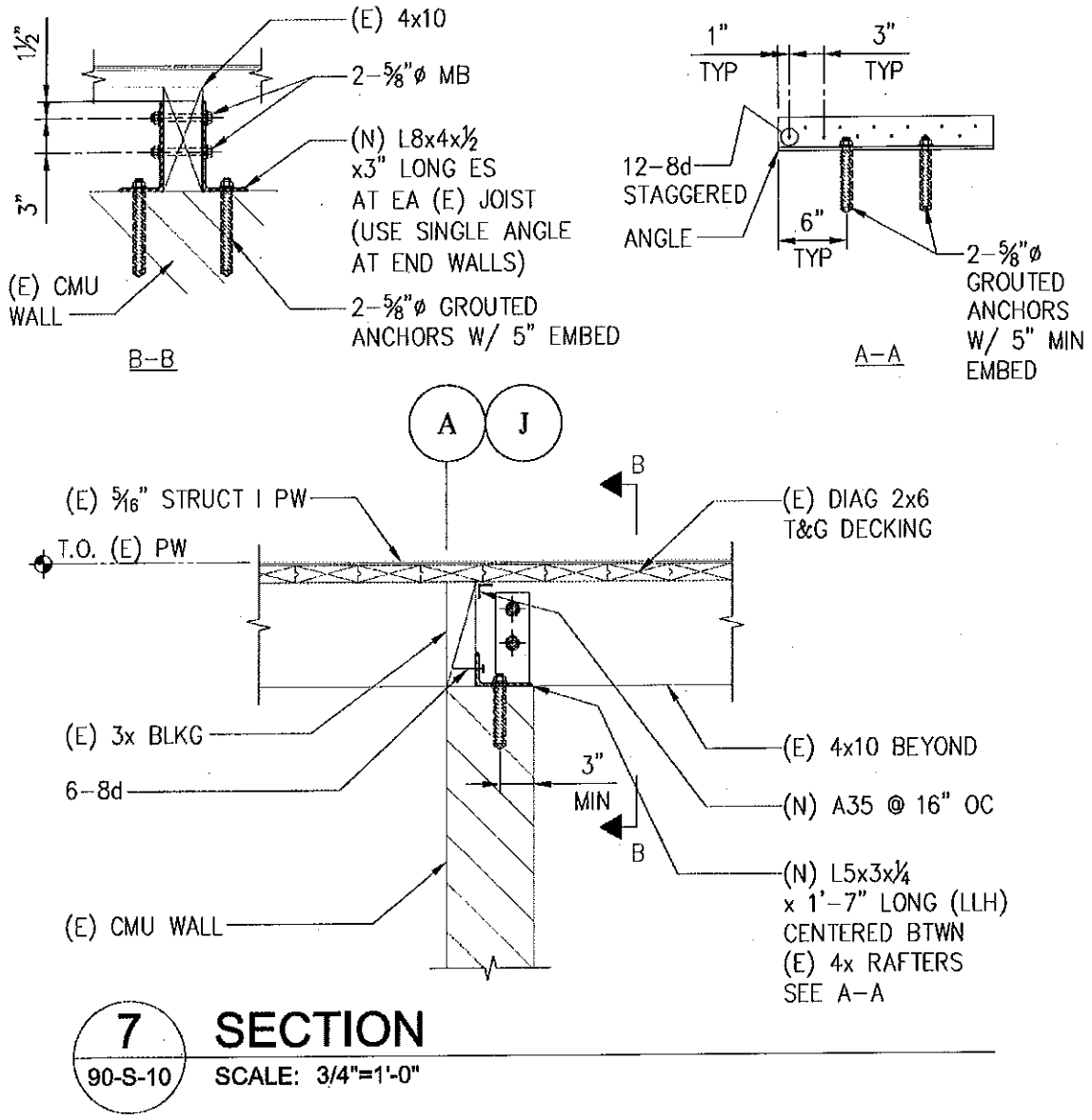

Sketch 4.06 **Drawing 90-S-21, Detail 3**

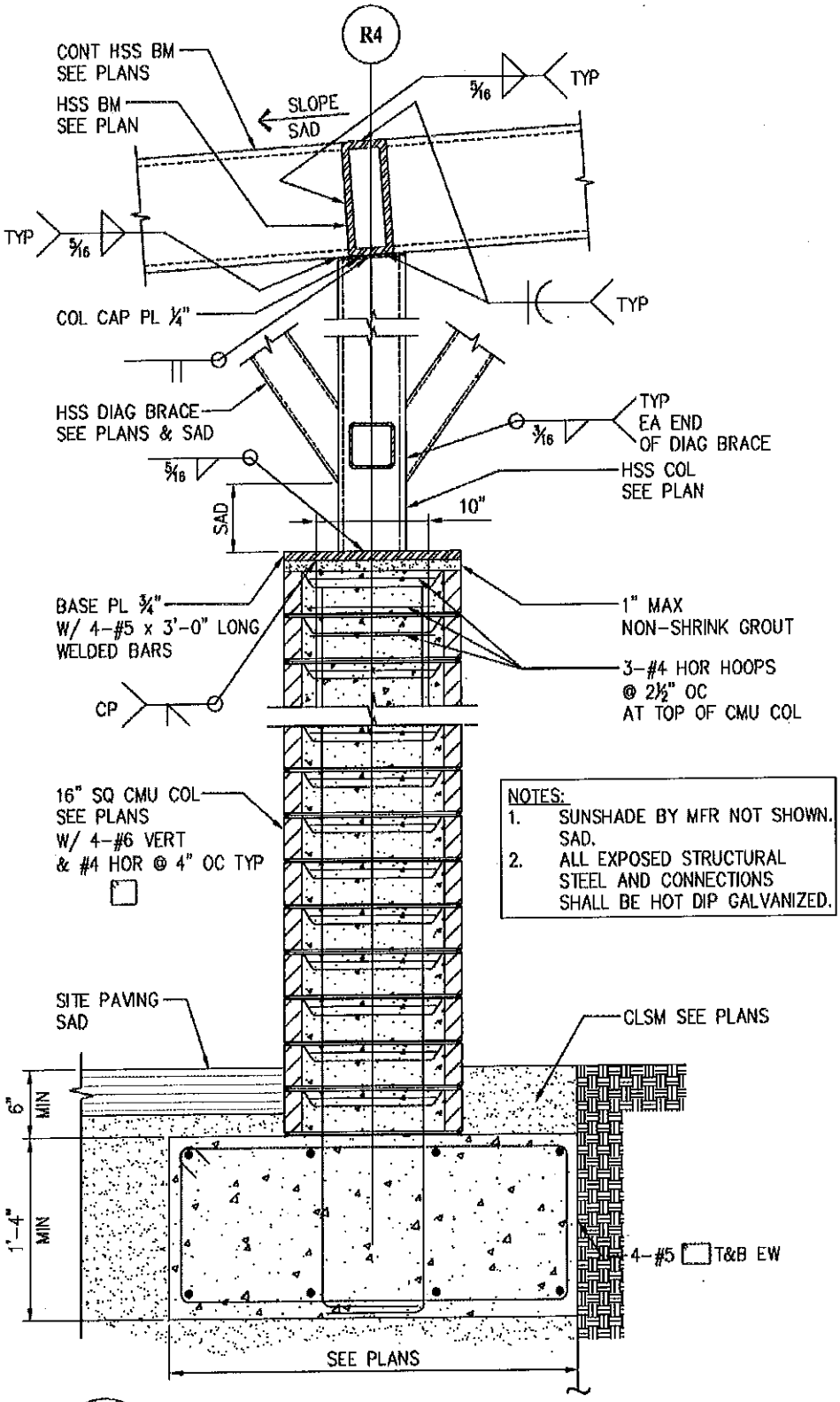

3 / 90-S-11 **SECTION**

SCALE: 1"=1'-0"

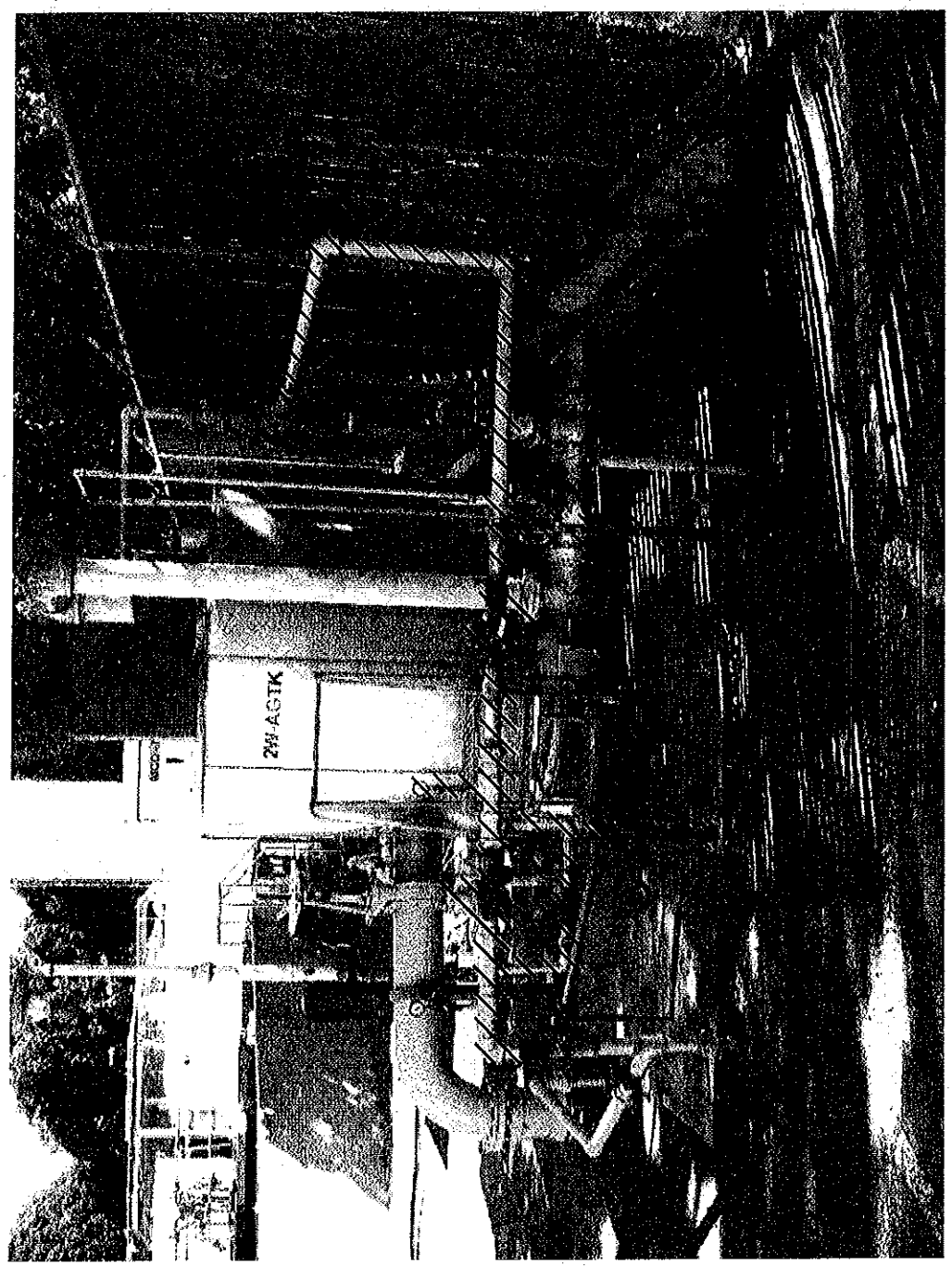

4

A

01-D-07A

1W PIPING

SCALE: N/A

FILE: 01D08A

SKETCH 4.07 - DRAWING 01-D-08

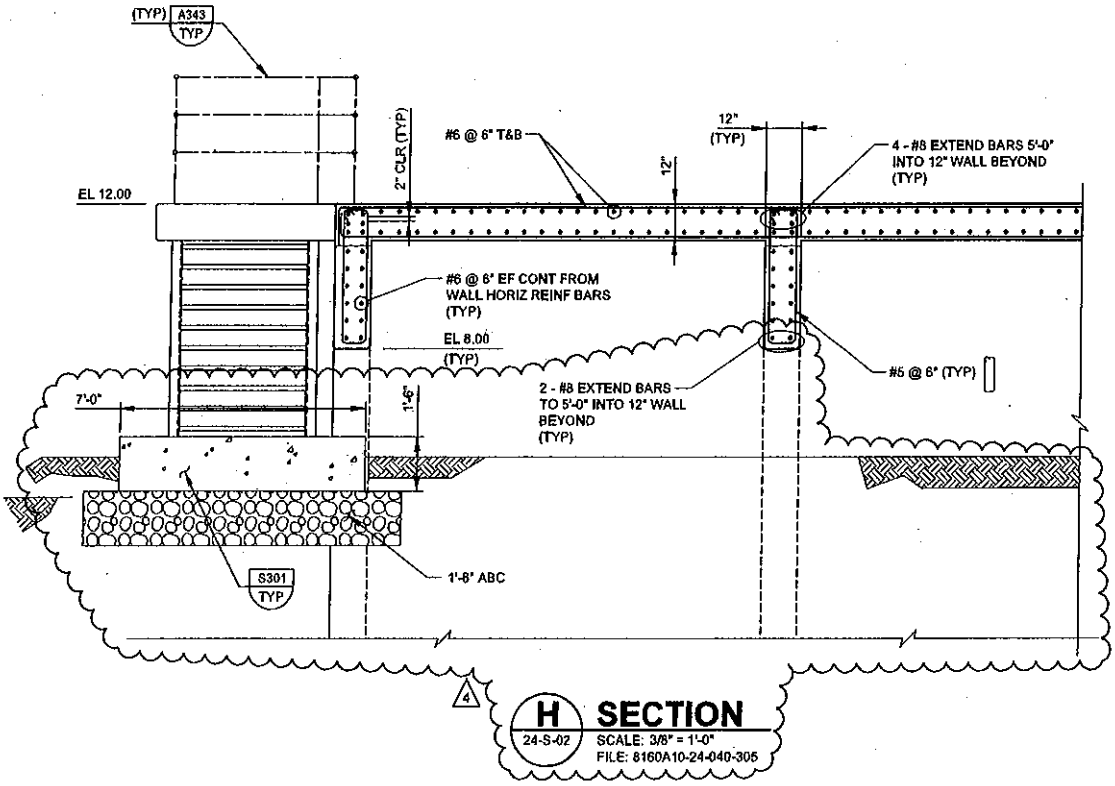

HALFSIZE

SKETCH 4.08 - DRAWING 24-S-05

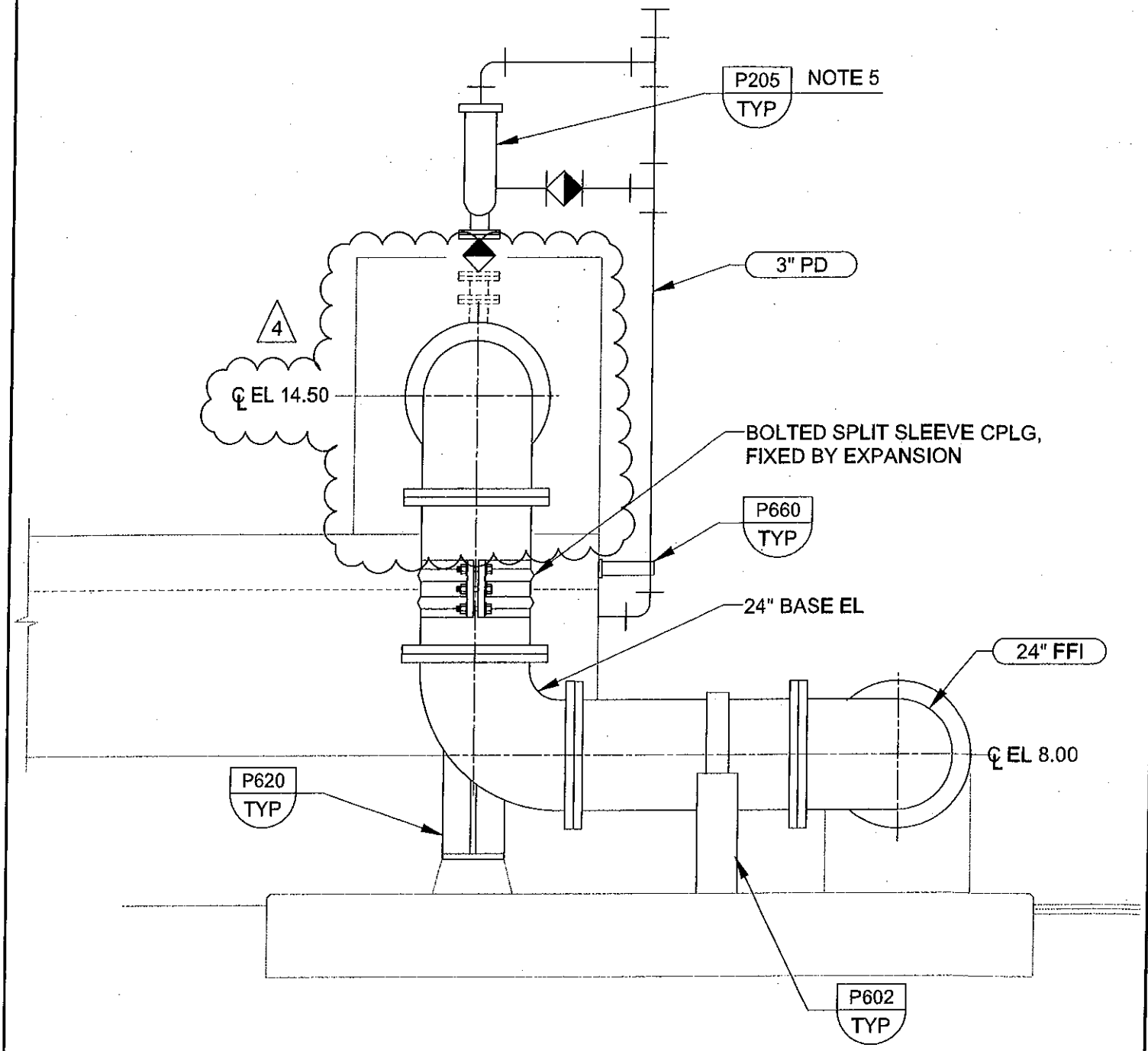

D 24-M-02 **SECTION**

SCALE: 3/8" = 1'-0"
FILE: 8160A10-24-050-301

SKETCH 4.09 - DRAWING 24-M-03

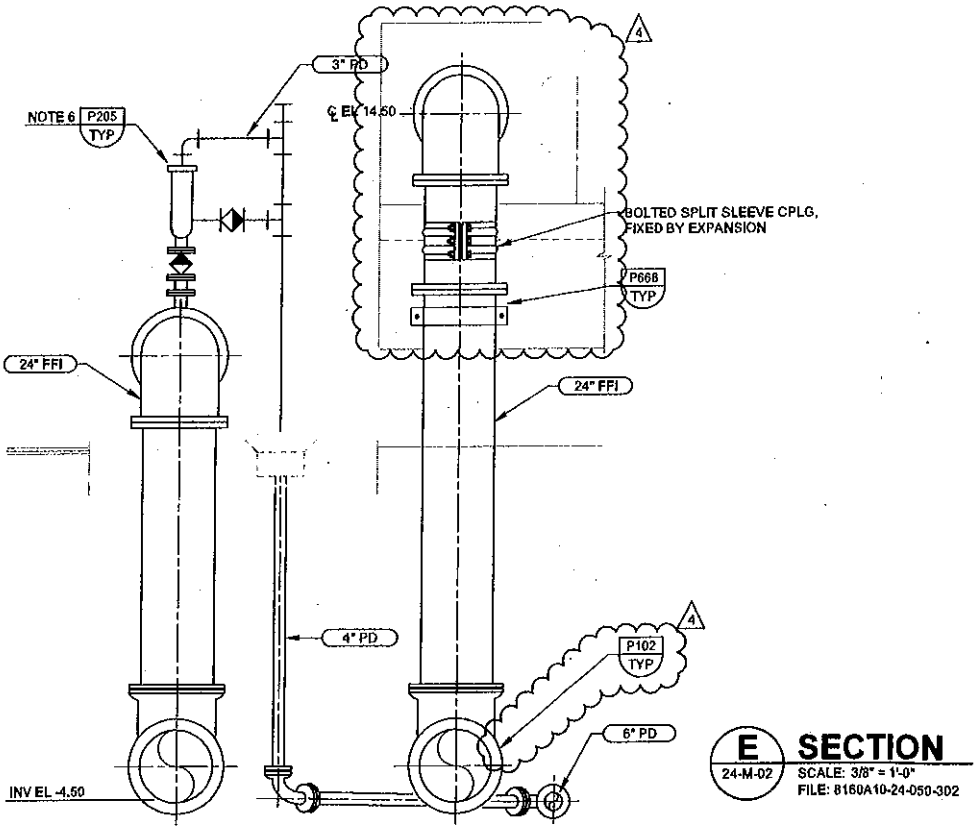

HALFSIZE

SKETCH 4.10 - DRAWING 24-M-03

General Decision Number: CA100029 03/18/2011 CA29

Superseded General Decision Number: CA20080029

State: California

Construction Types: Building, Heavy (Heavy and Dredging) and Highway

Counties: Alameda, Calaveras, Contra Costa, Fresno, Kings, Madera, Mariposa, Merced, Monterey, San Benito, San Francisco, San Joaquin, San Mateo, Santa Clara, Santa Cruz, Stanislaus and Tuolumne Counties in California.

BUILDING CONSTRUCTION PROJECTS; DREDGING PROJECTS (does not include hopper dredge work); HEAVY CONSTRUCTION PROJECTS (does not include water well drilling); HIGHWAY CONSTRUCTION PROJECTS

Modification Number	Publication Date
0	03/12/2010
1	03/19/2010
2	04/02/2010

3	05/28/2010
4	06/11/2010
5	06/25/2010
6	07/02/2010
7	07/09/2010
8	08/13/2010
9	08/20/2010
10	08/27/2010
11	09/03/2010
12	09/10/2010
13	10/08/2010
14	10/15/2010
15	10/29/2010
16	11/19/2010
17	12/03/2010
18	01/21/2011
19	01/28/2011
20	02/11/2011
21	02/18/2011
22	03/18/2011

ASBE0016-001 01/01/2010

AREA 1: ALAMEDA, CONTRA COSTA, LAKE, MARIN, MENDOCINO, MONTEREY, NAPA, SAN BENITO, SAN FRANCISCO, SAN MATEO, SANTA

CLARA, SANTA CRUZ, SOLANO, & SONOMA COUNTIES

AREA 2: ALPINE, AMADOR, BUTTE, CALAVERAS, COLUSA, DEL NORTE, EL DORADO, FRESNO, GLENN, HUMBOLDT, KINGS, LASSEN, MADERA, MARIPOSA, MERCED, MODOC, MONO, NEVADA, PLACER, PLUMAS, SACRAMENTO, SAN JOAQUIN, SHASTA, SIERRA, SISKIYOU, STANISLAU, SUTTER, TEHEMA, TRINITY, TULARE, TUOLUMNE, YOLO, & YUBA COUNTIES

	Rates	Fringes
Asbestos Workers/Insulator (Includes the application of all insulating materials, Protective Coverings, Coatings, and Finishes to all types of mechanical systems)		
Area 1	$ 50.43	16.66
Area 2	$ 39.78	16.66

ASBE0016-004 01/01/2010

	Rates	Fringes
Asbestos Removal		

worker/hazardous material
handler (Includes
preparation, wetting,
stripping, removal,
scrapping, vacuuming, bagging
and disposing of all
insulation materials from
mechanical systems, whether
they contain asbestos or not)....$ 15.18 2.80

BOIL0549-001 01/01/2009

AREA 1: ALAMEDA, CONTRA COSTA, SAN FRANCISCO, SAN MATEO & SANTA CLARA COUNTIES

AREA 2: REMAINING COUNTIES

	Rates	Fringes
BOILERMAKER		
Area 1	$ 40.17	22.32
Area 2	$ 37.01	22.25

BRCA0003-001 08/01/2008

	Rates	Fringes
MARBLE FINISHER	$ 28.02	12.12

BRCA0003-003 08/01/2008

	Rates	Fringes
MARBLE MASON	$ 39.22	18.58

BRCA0003-005 05/01/2010

	Rates	Fringes
BRICKLAYER		
(1) Fresno, Kings, Madera, Mariposa, Merced	$ 32.96	18.59
(7) San Francisco, San Mateo	$ 39.10	20.97
(8) Alameda, Contra Costa, San Benito, Santa Clara	$ 38.38	19.17
(9) Calaveras, San Joaquin, Stanislaus,		

Toulumne.....$ 33.86 18.24

(16) Monterey, Santa Cruz...$ 34.91 21.42

BRCA0003-008 07/01/2010

Rates Fringes

TERRAZZO FINISHER.....$ 30.30 13.77

TERRAZZO WORKER/SETTER.....$ 39.30 21.20

BRCA0003-011 01/01/2011

AREA 1: Alameda, Contra Costa, Monterey, San Benito, San Francisco, San Mateo, Santa Clara, Santa Cruz

AREA 2: Calaveras, San Joaquin, Stanislaus, Tuolumne

AREA 3: Fresno, Kings, Madera, Mariposa, Merced

Rates Fringes

TILE FINISHER

Area 1.....$ 21.44 12.31

Area 2.....$ 21.26 12.44

Area 3.....$ 21.01 11.58

Tile Layer

Area 1.....$ 38.61 13.73

Area 2.....$ 34.41 13.68

Area 3.....$ 29.78 13.10

CARP0022-001 07/01/2010

San Francisco County

Rates Fringes

Carpenters

Bridge Builder/Highway

Carpenter.....$ 37.50 23.14

Hardwood Floorlayer,

Shingler, Power Saw

Operator, Steel Scaffold &

Steel Shoring Erector, Saw

Filer.....$ 37.65 23.14

Journeyman Carpenter.....$ 37.50 23.14

Millwright.....$ 37.60 24.73

CARP0034-001 07/01/2009

	Rates	Fringes
Diver		
Assistant Tender, ROV		
Tender/Technician.....	$ 35.75	24.16
Diver standby.....	$ 40.33	24.16
Diver Tender.....	$ 39.33	24.16
Diver wet.....	$ 80.66	24.16
Manifold Operator (mixed gas).....	$ 44.33	24.16
Manifold Operator (Standby).	$ 39.33	24.16

DEPTH PAY (Surface Diving):

050 to 100 ft $2.00 per foot

101 to 150 ft $3.00 per foot

151 to 220 ft $4.00 per foot

SATURATION DIVING:

The standby rate shall apply until saturation starts. The saturation diving rate applies when divers are under pressure continuously until work task and decompression are complete. The diver rate shall be paid for all saturation hours.

DIVING IN ENCLOSURES:

Where it is necessary for Divers to enter pipes or tunnels, or other enclosures where there is no vertical ascent, the following premium shall be paid: Distance traveled from entrance 26 feet to 300 feet: $1.00 per foot. When it is necessary for a diver to enter any pipe, tunnel or other enclosure less than 48" in height, the premium will be $1.00 per foot.

WORK IN COMBINATION OF CLASSIFICATIONS:

Employees working in any combination of classifications within the diving crew (except dive supervisor) in a shift are paid in the classification with the highest rate for that shift.

CARP0034-003 07/01/2010

	Rates	Fringes
Piledriver.....	$ 36.75	24.86

CARP0035-007 07/01/2010

AREA 1: Alameda, Contra Costa, San Francisco, San Mateo, Santa Clara counties

AREA 2: Monterey, San Benito, Santa Cruz Counties

AREA 3: Calaveras, Fresno, Kings, Madera, Mariposa, Merced, San Joaquin, Stanislaus, Tuolumne Counties

	Rates	Fringes
Modular Furniture Installer		
Area 1		
Installer I	$ 22.11	14.98
Installer II	$ 18.68	14.98
Lead Installer	$ 25.56	15.48
Master Installer	$ 29.78	15.48
Area 2		
Installer I	$ 19.46	14.98
Installer II	$ 16.51	14.89
Lead Installer	$ 22.43	15.48
Master Installer	$ 26.06	15.48
Area 3		
Installer I	$ 18.51	14.98
Installer II	$ 15.74	14.98
Lead Installer	$ 21.31	15.48
Master Installer	$ 24.73	15.48

CARP0035-008 08/01/2010

AREA 1: Alameda, Contra Costa, San Francisco, San Mateo, Santa Clara counties

AREA 2: Monterey, San Benito, Santa Cruz Counties

AREA 4: Calaveras, Fresno, Kings, Madera, Mariposa, Merced, San Joaquin, Stanislaus, Tuolumne Counties

	Rates	Fringes
Drywall Installers/Lathers:		
Area 1	$ 37.50	22.02
Area 2	$ 31.62	22.02
Area 4	$ 30.77	22.02
Drywall Stocker/Scrapper		
Area 1	$ 18.75	12.88
Area 2	$ 15.81	12.88
Area 4	$ 15.39	12.88

CARP0152-001 07/01/2010

Contra Costa County

Rates Fringes

Carpenters

Bridge Builder/Highway

Carpenter.....$ 37.50 23.14

Hardwood Floorlayer,

Shingler, Power Saw

Operator, Steel Scaffold &

Steel Shoring Erector, Saw

Filer.....$ 37.65 23.14

Journeyman Carpenter.....$ 37.50 23.14

Millwright.....$ 37.60 24.73

CARP0152-002 07/01/2010

San Joaquin County

Rates Fringes

Carpenters

Bridge Builder/Highway

Carpenter.....$ 37.50 23.14

Hardwood Floorlayer,

Shingler, Power Saw

Operator, Steel Scaffold &

Steel Shoring Erector, Saw

Filer.....$ 31.32 23.14

Journeyman Carpenter.....$ 31.17 23.14

Millwright.....$ 33.67 24.73

CARP0152-004 07/01/2010

Calaveras, Mariposa, Merced, Stanislaus and Tuolumne Counties

Rates Fringes

Carpenters

Bridge Builder/Highway

Carpenter.....$ 37.50 23.14

Hardwood Floorlayer,

Shingler, Power Saw

Operator, Steel Scaffold &

Steel Shoring Erector, Saw

Filer.....$ 30.42 23.14

Journeyman Carpenter.....$ 30.27 23.14

Millwright.....$ 32.77 24.73

CARP0217-001 07/01/2010

San Mateo County

	Rates	Fringes
Carpenters		
Bridge Builder/Highway Carpenter	$ 37.50	23.14
Hardwood Floorlayer, Shingler, Power Saw Operator, Steel Scaffold & Steel Shoring Erector, Saw Filer	$ 37.65	23.14
Journeyman Carpenter	$ 37.50	23.14
Millwright	$ 37.60	24.73

CARP0405-001 07/01/2010

Santa Clara County

	Rates	Fringes
Carpenters		
Bridge Builder/Highway Carpenter	$ 37.50	23.14
Hardwood Floorlayer,		

Shingler, Power Saw

Operator, Steel Scaffold &

Steel Shoring Erector, Saw

Filer.....$ 37.65 23.14

Journeyman Carpenter.....$ 37.50 23.14

Millwright.....$ 37.60 24.73

CARP0405-002 07/01/2010

San Benito County

Rates Fringes

Carpenters

Bridge Builder/Highway

Carpenter.....$ 37.50 23.14

Hardwood Floorlayer,

Shingler, Power Saw

Operator, Steel Scaffold &

Steel Shoring Erector, Saw

Filer.....$ 31.77 23.14

Journeyman Carpenter.....$ 31.62 23.14

Millwright.....$ 34.12 24.73

CARP0505-001 07/01/2010

Santa Cruz County

	Rates	Fringes
Carpenters		
Bridge Builder/Highway		
Carpenter.....	$ 37.50	23.14
Hardwood Floorlayer,		
Shingler, Power Saw		
Operator, Steel Scaffold &		
Steel Shoring Erector, Saw		
Filer.....	$ 31.77	23.14
Journeyman Carpenter.....	$ 31.62	23.14
Millwright.....	$ 34.12	24.73

CARP0605-001 07/01/2010

Monterey County

	Rates	Fringes
Carpenters		
Bridge Builder/Highway		
Carpenter.....	$ 37.50	23.14

Hardwood Floorlayer,

Shingler, Power Saw

Operator, Steel Scaffold &

Steel Shoring Erector, Saw

Filer.....$ 31.77 23.14

Journeyman Carpenter.....$ 31.62 23.14

Millwright.....$ 34.12 24.73

CARP0701-001 07/01/2010

Fresno and Madera Counties

Rates Fringes

Carpenters

Bridge Builder/Highway

Carpenter.....$ 37.50 23.14

Hardwood Floorlayer,

Shingler, Power Saw

Operator, Steel Scaffold &

Steel Shoring Erector, Saw

Filer.....$ 30.42 23.14

Journeyman Carpenter.....$ 30.27 23.14

Millwright.....$ 32.77 24.73

CARP0713-001 07/01/2010

Alameda County

	Rates	Fringes
Carpenters		
Bridge Builder/Highway Carpenter	$ 37.50	23.14
Hardwood Floorlayer, Shingler, Power Saw Operator, Steel Scaffold & Steel Shoring Erector, Saw Filer	$ 37.65	23.14
Journeyman Carpenter	$ 37.50	23.14
Millwright	$ 37.60	24.73

CARP1109-001 07/01/2010

Kings County

	Rates	Fringes
Carpenters		
Bridge Builder/Highway		

Carpenter.....$ 37.50 23.14

Hardwood Floorlayer,

Shingler, Power Saw

Operator, Steel Scaffold &

Steel Shoring Erector, Saw

Filer.....$ 30.42 23.14

Journeyman Carpenter.....$ 30.27 23.14

Millwright.....$ 32.77 24.73

ELEC0006-001 12/01/2008

ALAMEDA, CONTRA COSTA, MONTEREY, SAN BENITO, SAN FRANCISCO, SAN MATEO, SANTA CLARA, AND SANTA CRUZ COUNTIES

Rates Fringes

Sound & Communications

Installer.....$ 29.87 3%+11.95

Technician.....$ 34.01 3%+11.95

SCOPE OF WORK: Including any data system whose only function is to transmit or receive information; excluding all other data systems or multiple systems which include control function or power supply; inclusion or exclusion of

terminations and testings of conductors determined by their function; excluding fire alarm work when installed in raceways (including wire and cable pulling) and when performed on new or major remodel building projects or jobs for which the conductors for the fire alarm system are installed in conduit; excluding installation of raceway systems, line voltage work, industrial work, life-safety systems (all buildings having floors located more than 75' above the lowest floor level having building access); excluding energy management systems.

FOOTNOTE: Fire alarm work when installed in raceways (including wire and cable pulling), on projects which involve new or major remodel building construction, for which the conductors for the fire alarm system are installed in the conduit, shall be performed by the inside electrician.

ELEC0006-007 12/01/2010

SAN FRANCISCO COUNTY

	Rates	Fringes
ELECTRICIAN.....	$ 53.05	22.69

ELEC0006-008 12/01/2006

CALAVERAS, MARIPOSA, MERCED, SAN JOAQUIN, STANISLAUS AND TUOLUMNE COUNTIES

	Rates	Fringes
Communications System		
Installer	$ 23.47	3%+10.65
Technician	$ 26.72	3%+10.65

SCOPE OF WORK: Including any data system whose only function is to transmit or receive information; excluding all other data systems or multiple systems which include control function or power supply; inclusion or exclusion of terminations and testings of conductors determined by their function; excluding fire alarm work when installed in raceways (including wire and cable pulling) and when performed on new or major remodel building projects or jobs for which the conductors for the fire alarm system are installed in conduit; excluding installation of raceway systems, line voltage work, industrial work, life-safety systems (all buildings having floors located more than 75'

above the lowest floor level having building access);
excluding energy management systems.

FOOTNOTE: Fire alarm work when installed in raceways (including wire and cable pulling), on projects which involve new or major remodel building construction, for which the conductors for the fire alarm system are installed in the conduit, shall be performed by the inside electrician.

ELEC0100-002 12/01/2010

FRESNO, KINGS, AND MADERA COUNTIES

	Rates	Fringes
ELECTRICIAN.....	$ 32.85	3%+15.25

ELEC0100-005 12/01/2009

FRESNO, KINGS, MADERA

	Rates	Fringes
Communications System		

Installer.....$ 26.29 12.14

Technician.....$ 29.93 12.25

SCOPE OF WORK

Includes the installation testing, service and maintenance, of the following systems which utilize the transmission and/or transference of voice, sound, vision and digital for commercial, education, security and entertainment purposes for the following: TV monitoring and surveillance, background-foreground music, intercom and telephone interconnect, inventory control systems, microwave transmission, multi-media, multiplex, nurse call system, radio page, school intercom and sound, burglar alarms, and low voltage master clock systems.

A. SOUND AND VOICE TRANSMISSION/TRANSFERENCE SYSTEMS

Background foreground music, Intercom and telephone interconnect systems, Telephone systems Nurse call systems, Radio page systems, School intercom and sound systems, Burglar alarm systems, Low voltage, master clock systems, Multi-media/multiplex systems, Sound and musical entertainment systems, RF systems, Antennas and Wave Guide,

B. FIRE ALARM SYSTEMS Installation, wire pulling and testing

C. TELEVISION AND VIDEO SYSTEMS Television monitoring and surveillance systems Video security systems, Video entertainment systems, Video educational systems, Microwave transmission systems, CATV and CCTV

D. SECURITY SYSTEMS Perimeter security systems Vibration sensor systems Card access systems Access control systems, Sonar/infrared monitoring equipment

E. COMMUNICATIONS SYSTEMS THAT TRANSMIT OR RECEIVE INFORMATION AND/OR CONTROL SYSTEMS THAT ARE INTRINSIC TO THE ABOVE LISTED SYSTEMS SCADA (Supervisory Control and Data Acquisition) PCM (Pulse Code Modulation) Inventory Control Systems, Digital Data Systems Broadband and Baseband and Carriers Point of Sale Systems, VSAT Data Systems Data Communication Systems RF and Remote Control Systems, Fiber Optic Data Systems

WORK EXCLUDED Raceway systems are not covered (excluding Ladder-Rack for the purpose of the above listed systems). Chases and/or nipples (not to exceed 10 feet) may be installed on open wiring systems. Energy management systems. SCADA (Supervisory Control and Data Acquisition) when not intrinsic to the above listed systems (in the scope). Fire alarm systems when installed in raceways

(including wire and cable pulling) shall be performed at the electrician wage rate, when either of the following two (2) conditions apply:

1. The project involves new or major remodel building trades construction.
2. The conductors for the fire alarm system are installed in conduit.

ELEC0234-001 06/01/2010

MONTEREY, SAN BENITO AND SANTA CRUZ COUNTIES

	Rates	Fringes
ELECTRICIAN	$ 41.20	21.49

ELEC0302-001 06/01/2010

CONTRA COSTA COUNTY

	Rates	Fringes
CABLE SPLICER	$ 52.49	3%+20.15
ELECTRICIAN	$ 46.21	3%+20.15

ELEC0332-001 11/29/2010

SANTA CLARA COUNTY

	Rates	Fringes
CABLE SPLICER	$ 54.71	26.67
ELECTRICIAN	$ 47.57	26.46

FOOTNOTES: Work under compressed air or where gas masks are required, orwork on ladders, scaffolds, stacks, "Bosun's chairs," or other structures and where the workers are not protected by permanent guard rails at a distance of 40 to 60 ft. from the ground or supporting structures: to be paid one and one-half times the straight-time rate of pay.
Work on structures of 60 ft. or over (as described above): to be paid twice the straight-time rate of pay.

ELEC0595-001 06/01/2010

ALAMEDA COUNTY

	Rates	Fringes
CABLE SPLICER	$ 50.06	23.67+3%

ELECTRICIAN.....$ 44.50 23.67+3%

ELEC0595-002 12/01/2010

CALAVERAS AND SAN JOAQUIN COUNTIES

Rates Fringes

CABLE SPLICER.....$ 37.13 7.5%+20.39

ELECTRICIAN

(1) Tunnel work.....$ 34.65 7.5%+20.39

(2) All other work.....$ 33.00 7.5%+20.39

ELEC0617-001 06/01/2010

SAN MATEO COUNTY

Rates Fringes

ELECTRICIAN.....$ 50.00 22.33

ELEC0684-001 07/01/2010

MARIPOSA, MERCED, STANISLAUS AND TUOLUMNE COUNTIES

	Rates	Fringes
ELECTRICIAN.....	$ 34.60	3%+16.90

CABLE SPLICER = 110% of Journeyman Electrician

ELEC1245-001 06/01/2010

	Rates	Fringes
LINE CONSTRUCTION		
(1) Lineman; Cable splicer..	$ 46.14	13.41
(2) Equipment specialist (operates crawler tractors, commercial motor vehicles, backhoes, trenchers, cranes (50 tons and below), overhead & underground distribution line equipment).....	$ 36.85	12.36
(3) Groundman.....	$ 28.19	12.10
(4) Powderman.....	$ 41.20	12.53

HOLIDAYS: New Year's Day, M.L. King Day, Memorial Day, Independence Day, Labor Day, Veterans Day, Thanksgiving Day

and day after Thanksgiving, Christmas Day

ELEV0008-001 01/01/2010

	Rates	Fringes
ELEVATOR MECHANIC.....	$ 54.89	20.035

FOOTNOTE:

PAID VACATION: Employer contributes 8% of regular hourly rate as vacation pay credit for employees with more than 5 years of service, and 6% for 6 months to 5 years of service.

PAID HOLIDAYS: New Years Day, Memorial Day, Independence Day, Labor Day, Veterans Day, Thanksgiving Day, Friday after Thanksgiving, and Christmas Day.

ENGI0003-008 07/01/2009

	Rates	Fringes
Dredging: (DREDGING: CLAMSHELL & DIPPER DREDGING; HYDRAULIC SUCTION DREDGING:)		
AREA 1:		
(1) Leverman.....	$ 38.94	22.58

(2) Dredge Dozer; Heavy

duty repairman.....$ 33.98 22.58

(3) Booster Pump

Operator; Deck

Engineer; Deck mate;

Dredge Tender; Winch

Operator.....$ 32.86 22.58

(4) Bargeman; Deckhand;

Fireman; Leveehand; Oiler..$ 29.56 22.58

AREA 2:

(1) Leverman.....$ 40.94 22.58

(2) Dredge Dozer; Heavy

duty repairman.....$ 35.98 22.58

(3) Booster Pump

Operator; Deck

Engineer; Deck mate;

Dredge Tender; Winch

Operator.....$ 34.86 22.58

(4) Bargeman; Deckhand;

Fireman; Leveehand; Oiler..$ 31.56 22.58

AREA DESCRIPTIONS

AREA 1: ALAMEDA,BUTTE, CONTRA COSTA, KINGS, MARIN, MERCED, NAPA, SACRAMENTO, SAN BENITO, SAN FRANCISCO, SAN JOAQUIN,

SAN MATEO, SANTA CLARA, SANTA CRUZ, SOLANO, STANISLAUS, SUTTER, YOLO, AND YUBA COUNTIES

AREA 2: MODOC COUNTY

THE REMAINGING COUNTIES ARE SPLIT BETWEEN AREA 1 AND AREA 2 AS NOTED BELOW:

ALPINE COUNTY:

Area 1: Northernmost part

Area 2: Remainder

CALAVERAS COUNTY:

Area 1: Remainder

Area 2: Eastern part

COLUSA COUNTY:

Area 1: Eastern part

Area 2: Remainder

ELDORADO COUNTY:

Area 1: North Central part

Area 2: Remainder

FRESNO COUNTY:

Area 1: Remainder

Area 2: Eastern part

GLENN COUNTY:

Area 1: Eastern part

Area 2: Remainder

LASSEN COUNTY:

Area 1: Western part along the Southern portion of border with Shasta County

Area 2: Remainder

MADERA COUNTY:

Area 1: Except Eastern part

Area 2: Eastern part

MARIPOSA COUNTY

Area 1: Except Eastern part

Area 2: Eastern part

MONTERREY COUNTY

Area 1: Except Southwestern part

Area 2: Southwestern part

NEVADA COUNTY:

Area 1: All but the Northern portion along the border of Sierra County

Area 2: Remainder

PLACER COUNTY:

Area 1: Al but the Central portion

Area 2: Remainder

PLUMAS COUNTY:

Area 1: Western portion

Area 2: Remainder

SHASTA COUNTY:

Area 1: All but the Northeastern corner

Area 2: Remainder

SIERRA COUNTY:

Area 1: Western part

Area 2: Remainder

SISKIYOU COUNTY:

Area 1: Central part

Area 2: Remainder

SONOMA COUNTY:

Area 1: All but the Northwestern corner

Area 2: Remainder

TEHAMA COUNTY:

Area 1: All but the Western border with Mendocino & Trinity Counties

Area 2: Remainder

TRINITY COUNTY:

Area 1: East Central part and the Northeastern border with Shasta County

Area 2: Remainder

TUOLUMNE COUNTY:

Area 1: Except Eastern part

Area 2: Eastern part

ENGI0003-018 07/01/2010

"AREA 1" WAGE RATES ARE LISTED BELOW

"AREA 2" RECEIVES AN ADDITIONAL $2.00 PER HOUR ABOVE AREA 1 RATES.

SEE AREA DEFINITIONS BELOW

	Rates	Fringes
OPERATOR: Power Equipment		
(AREA 1:)		
GROUP 1	$ 37.77	23.00
GROUP 2	$ 36.24	23.00
GROUP 3	$ 34.76	23.00
GROUP 4	$ 33.38	23.00
GROUP 5	$ 32.11	23.00
GROUP 6	$ 30.79	23.00
GROUP 7	$ 29.65	23.00
GROUP 8	$ 28.51	23.00
GROUP 8-A	$ 28.30	23.00
OPERATOR: Power Equipment		
(Cranes and Attachments -		
AREA 1:)		
GROUP 1		
Cranes	$ 38.65	23.00
Oiler	$ 29.39	23.00
Truck crane oiler	$ 31.68	23.00
GROUP 2		
Cranes	$ 36.89	23.00
Oiler	$ 29.18	23.00

Truck crane oiler.....$ 31.42 23.00

GROUP 3

Cranes.....$ 35.14 23.00

Hydraulic.....$ 30.79 23.00

Oiler.....$ 28.90 23.00

Truck Crane Oiler.....$ 31.18 23.00

OPERATOR: Power Equipment

(Piledriving - AREA 1:)

GROUP 1

Lifting devices.....$ 38.99 23.00

Oiler.....$ 29.73 23.00

Truck crane oiler.....$ 32.01 23.00

GROUP 2

Lifting devices.....$ 37.17 23.00

Oiler.....$ 29.46 23.00

Truck Crane Oiler.....$ 31.76 23.00

GROUP 3

Lifting devices.....$ 35.49 23.00

Oiler.....$ 29.24 23.00

Truck Crane Oiler.....$ 31.47 23.00

GROUP 4.....$ 33.72 23.00

GROUP 5.....$ 31.08 23.00

GROUP 6.....$ 28.85 23.00

OPERATOR: Power Equipment

(Steel Erection - AREA 1:)

GROUP 1

Cranes.....$ 39.62 23.00

Oiler.....$ 30.07 23.00

Truck Crane Oiler.....$ 32.30 23.00

GROUP 2

Cranes.....$ 37.85 23.00

Oiler.....$ 29.80 23.00

Truck Crane Oiler.....$ 32.08 23.00

GROUP 3

Cranes.....$ 36.37 23.00

Hydraulic.....$ 31.42 23.00

Oiler.....$ 29.58 23.00

Truck Crane Oiler.....$ 31.81 23.00

GROUP 4.....$ 34.35 23.00

GROUP 5.....$ 33.05 23.00

OPERATOR: Power Equipment

(Tunnel and Underground Work

- AREA 1:)

SHAFTS, STOPES, RAISES:

GROUP 1.....$ 33.87 23.00

GROUP 1-A.....$ 36.34 23.00

GROUP 2.....$ 32.61 23.00

GROUP 3.....$ 31.28 23.00

GROUP 4.....$ 30.14 23.00

GROUP 5.....$ 29.00 23.00

UNDERGROUND:

GROUP 1	$ 33.77	23.00
GROUP 1-A	$ 36.34	23.00
GROUP 2	$ 32.51	23.00
GROUP 3	$ 31.18	23.00
GROUP 4	$ 30.04	23.00
GROUP 5	$ 28.90	23.00

FOOTNOTE: Work suspended by ropes or cables, or work on a Yo-Yo Cat: $.60 per hour additional.

POWER EQUIPMENT OPERATOR CLASSIFICATIONS

GROUP 1: Operator of helicopter (when used in erection work); Hydraulic excavator, 7 cu. yds. and over; Power shovels, over 7 cu. yds.

GROUP 2: Highline cableway; Hydraulic excavator, 3-1/2 cu. yds. up to 7 cu. yds.; Licensed construction work boat operator, on site; Power blade operator (finish); Power shovels, over 1 cu. yd. up to and including 7 cu. yds. m.r.c.

GROUP 3: Asphalt milling machine; Cable backhoe; Combination

backhoe and loader over 3/4 cu. yds.; Continuous flight tie back machine assistant to engineer or mechanic; Crane mounted continuous flight tie back machine, tonnage to apply; Crane mounted drill attachment, tonnage to apply; Dozer, slope brd; Gradall; Hydraulic excavator, up to 3 1/2 cu. yds.; Loader 4 cu. yds. and over; Long reach excavator; Multiple engine scraper (when used as push pull); Power shovels, up to and including 1 cu. yd.; Pre-stress wire wrapping machine; Side boom cat, 572 or larger; Track loader 4 cu. yds. and over; Wheel excavator (up to and including 750 cu. yds. per hour)

GROUP 4: Asphalt plant engineer/box person; Chicago boom; Combination backhoe and loader up to and including 3/4 cu. yd.; Concrete batch plant (wet or dry); Dozer and/or push cat; Pull- type elevating loader; Gradesetter, grade checker (GPS, mechanical or otherwise); Grooving and grinding machine; Heading shield operator; Heavy-duty drilling equipment, Hughes, LDH, Watson 3000 or similar; Heavy-duty repairperson and/or welder; Lime spreader; Loader under 4 cu. yds.; Lubrication and service engineer (mobile and grease rack); Mechanical finishers or spreader machine (asphalt, Barber-Greene and similar); Miller Formless M-9000 slope paver or similar; Portable crushing and screening plants; Power blade support; Roller operator,

asphalt; Rubber-tired scraper, self-loading (paddle-wheels, etc.); Rubber- tired earthmoving equipment (scrapers); Slip form paver (concrete); Small tractor with drag; Soil stabilizer (P & H or equal); Spider plow and spider puller; Tubex pile rig; Unlicensed constuction work boat operator, on site; Timber skidder; Track loader up to 4 yds.; Tractor-drawn scraper; Tractor, compressor drill combination; Welder; Woods-Mixer (and other similar Pugmill equipment)

GROUP 5: Cast-in-place pipe laying machine; Combination slusher and motor operator; Concrete conveyor or concrete pump, truck or equipment mounted; Concrete conveyor, building site; Concrete pump or pumpcrete gun; Drilling equipment, Watson 2000, Texoma 700 or similar; Drilling and boring machinery, horizontal (not to apply to waterliners, wagon drills or jackhammers); Concrete mixer/all; Person and/or material hoist; Mechanical finishers (concrete) (Clary, Johnson, Bidwell Bridge Deck or similar types); Mechanical burm, curb and/or curb and gutter machine, concrete or asphalt); Mine or shaft hoist; Portable crusher; Power jumbo operator (setting slip-forms, etc., in tunnels); Screed (automatic or manual); Self-propelled compactor with dozer; Tractor with boom D6 or smaller; Trenching machine, maximum digging capacity over 5 ft.

depth; Vermeer T-600B rock cutter or similar

GROUP 6: Armor-Coater (or similar); Ballast jack tamper; Boom- type backfilling machine; Assistant plant engineer; Bridge and/or gantry crane; Chemical grouting machine, truck-mounted; Chip spreading machine operator; Concrete saw (self-propelled unit on streets, highways, airports and canals); Deck engineer; Drilling equipment Texoma 600, Hughes 200 Series or similar up to and including 30 ft. m.r.c.; Drill doctor; Helicopter radio operator; Hydro-hammer or similar; Line master; Skidsteer loader, Bobcat larger than 743 series or similar (with attachments); Locomotive; Lull hi-lift or similar; Oiler, truck mounted equipment; Pavement breaker, truck-mounted, with compressor combination; Paving fabric installation and/or laying machine; Pipe bending machine (pipelines only); Pipe wrapping machine (tractor propelled and supported); Screed (except asphaltic concrete paving); Self- propelled pipeline wrapping machine; Soils & materials tester; Tractor; Self-loading chipper; Concrete barrier moving machine

GROUP 7: Ballast regulator; Boom truck or dual-purpose A-frame truck, non-rotating - under 15 tons; Truck-mounted rotating telescopic boom type lifting device, Manitex or

similar (boom truck) - under 15 tons; Cary lift or similar; Combination slurry mixer and/or cleaner; Drilling equipment, 20 ft. and under m.r.c.; Firetender (hot plant); Grouting machine operator; Highline cableway signalperson; Stationary belt loader (Kolman or similar); Lift slab machine (Vagtborg and similar types); Maginnes internal full slab vibrator; Material hoist (1 drum); Mechanical trench shield; Pavement breaker with or without compressor combination); Pipe cleaning machine (tractor propelled and supported); Post driver; Roller (except asphalt); Chip Seal; Self-propelled automatically applied concrete curing mahcine (on streets, highways, airports and canals); Self-propelled compactor (without dozer); Signalperson; Slip-form pumps (lifting device for concrete forms); Tie spacer; Tower mobile; Trenching machine, maximum digging capacity up to and including 5 ft. depth; Truck- type loader

GROUP 8: Bit sharpener; Boiler tender; Box operator; Brakeperson; Combination mixer and compressor (shotcrete/gunite); Compressor operator; Deckhand; Fire tender; Forklift (under 20 ft.); Generator; Gunite/shotcrete equipment operator; Hydraulic monitor; Ken seal machine (or similar); Mixermobile; Oiler; Pump operator; Refrigeration plant; Reservoir-debris tug (self-propelled floating); Ross Carrier (construction site);

Rotomist operator; Self-propelled tape machine; Shuttlecar; Self-propelled power sweeper operator (includes vacuum sweeper); Slusher operator; Surface heater; Switchperson; Tar pot firetender; Tugger hoist, single drum; Vacuum cooling plant; Welding machine (powered other than by electricity)

GROUP 8-A: Elevator operator; Skidsteer loader-Bobcat 743 series or smaller, and similar (without attachments); Mini excavator under 25 H.P. (backhoe-trencher); Tub grinder wood chipper

---

ALL CRANES AND ATTACHMENTS

GROUP 1: Clamshell and dragline over 7 cu. yds.; Crane, over 100 tons; Derrick, over 100 tons; Derrick barge pedestal-mounted, over 100 tons; Self-propelled boom-type lifting device, over 100 tons

GROUP 2: Clamshell and dragline over 1 cu. yd. up to and including 7 cu. yds.; Crane, over 45 tons up to and including 100 tons; Derrick barge, 100 tons and under; Self-propelled boom-type lifting device, over 45 tons;

Tower crane

GROUP 3: Clamshell and dragline up to and including 1 cu. yd.; Cranes 45 tons and under; Self-propelled boom-type lifting device 45 tons and under; Boom Truck or dual purpose A-frame truck, non-rotating over 15 tons; Truck-mounted rotating telescopic boom type lifting device, Manitex or similar (boom truck) over 15 tons;

PILEDRIVERS

GROUP 1: Derrick barge pedestal mounted over 100 tons; Clamshell over 7 cu. yds.; Self-propelled boom-type lifting device over 100 tons; Truck crane or crawler, land or barge mounted over 100 tons

GROUP 2: Derrick barge pedestal mounted 45 tons to and including 100 tons; Clamshell up to and including 7 cu. yds.; Self-propelled boom-type lifting device over 45 tons; Truck crane or crawler, land or barge mounted, over 45 tons up to and including 100 tons; Fundex F-12 hydraulic pile rig

GROUP 3: Derrick barge pedestal mounted under 45 tons; Self-

propelled boom-type lifting device 45 tons and under; Skid/scow piledriver, any tonnage; Truck crane or crawler, land or barge mounted 45 tons and under

GROUP 4: Assistant operator in lieu of assistant to engineer; Forklift, 10 tons and over; Heavy-duty repairperson/welder

GROUP 5: Deck engineer

GROUP 6: Deckhand; Fire tender

STEEL ERECTORS

GROUP 1: Crane over 100 tons; Derrick over 100 tons; Self-propelled boom-type lifting device over 100 tons

GROUP 2: Crane over 45 tons to 100 tons; Derrick under 100 tons; Self-propelled boom-type lifting device over 45 tons to 100 tons; Tower crane

GROUP 3: Crane, 45 tons and under; Self-propelled boom-type lifting device, 45 tons and under

GROUP 4: Chicago boom; Forklift, 10 tons and over; Heavy-duty repair person/welder

GROUP 5: Boom cat

--

TUNNEL AND UNDERGROUND WORK

GROUP 1-A: Tunnel bore machine operator, 20' diameter or more

GROUP 1: Heading shield operator; Heavy-duty repairperson; Mucking machine (rubber tired, rail or track type); Raised bore operator (tunnels); Tunnel mole bore operator

GROUP 2: Combination slusher and motor operator; Concrete pump or pumpcrete gun; Power jumbo operator

GROUP 3: Drill doctor; Mine or shaft hoist

GROUP 4: Combination slurry mixer cleaner; Grouting Machine operator; Motorman

GROUP 5: Bit Sharpener; Brakeman; Combination mixer and compressor (gunite); Compressor operator; Oiler; Pump operator; Slusher operator

---

AREA DESCRIPTIONS:

POWER EQUIPMENT OPERATORS, CRANES AND ATTACHMENTS,TUNNEL AND UNDERGROUND [These areas do not apply to Piledrivers and Steel Erectors]

AREA 1: ALAMEDA, BUTTE, CONTRA COSTA, KINGS, MARIN, MERCED, NAPA, SACRAMENTO, SAN BENITO, SAN FRANCISCO, SAN JOAQUIN, SAN MATEO, SANTA CLARA, SANTA CRUZ, SOLANO, STANISLAUS, SUTTER, YOLO, AND YUBA COUNTIES

AREA 2 - MODOC COUNTY

THE REMAINING COUNTIES ARE SPLIT BETWEEN AREA 1 AND AREA 2 AS NOTED BELOW:

ALPINE COUNTY:

Area 1: Northernmost part

Area 2: Remainder

CALAVERAS COUNTY:

Area 1: Except Eastern part

Area 2: Eastern part

COLUSA COUNTY:

Area 1: Eastern part

Area 2: Remainder

DEL NORTE COUNTY:

Area 1: Extreme Southwestern corner

Area 2: Remainder

ELDORADO COUNTY:

Area 1: North Central part

Area 2: Remainder

FRESNO COUNTY

Area 1: Except Eastern part

Area 2: Eastern part

GLENN COUNTY:

Area 1: Eastern part

Area 2: Remainder

HUMBOLDT COUNTY:

Area 1: Except Eastern and Southwestern parts

Area 2: Remainder

LAKE COUNTY:

Area 1: Southern part

Area 2: Remainder

LASSEN COUNTY:

Area 1: Western part along the Southern portion of border with Shasta County

Area 2: Remainder

MADERA COUNTY

Area 1: Remainder

Area 2: Eastern part

MARIPOSA COUNTY

Area 1: Remainder

Area 2: Eastern part

MENDOCINO COUNTY:

Area 1: Central and Southeastern parts

Area 2: Remainder

MONTEREY COUNTY

Area 1: Remainder

Area 2: Southwestern part

NEVADA COUNTY:

Area 1: All but the Northern portion along the border of Sierra County

Area 2: Remainder

PLACER COUNTY:

Area 1: All but the Central portion

Area 2: Remainder

PLUMAS COUNTY:

Area 1: Western portion

Area 2: Remainder

SHASTA COUNTY:

Area 1: All but the Northeastern corner

Area 2: Remainder

SIERRA COUNTY:

Area 1: Western part

Area 2: Remainder

SISKIYOU COUNTY:

Area 1: Central part

Area 2: Remainder

SONOMA COUNTY:

Area 1: All but the Northwestern corner

Area 2: Reaminder

TEHAMA COUNTY:

Area 1: All but the Western border with mendocino & Trinity Counties

Area 2: Remainder

TRINITY COUNTY:

Area 1: East Central part and the Northeaster border with Shasta County

Area 2: Remainder

TULARE COUNTY;

Area 1: Remainder

Area 2: Eastern part

TUOLUMNE COUNTY:

Area 1: Remainder

Area 2: Eastern Part

ENGI0003-019 06/29/2009

SEE AREA DESCRIPTIONS BELOW

	Rates	Fringes
OPERATOR: Power Equipment		
(LANDSCAPE WORK ONLY)		
GROUP 1		
AREA 1	$ 28.64	20.53
AREA 2	$ 30.64	20.53
GROUP 2		
AREA 1	$ 25.04	20.53
AREA 2	$ 27.04	20.53
GROUP 3		
AREA 1	$ 20.43	20.53
AREA 2	$ 22.43	20.53

GROUP DESCRIPTIONS:

GROUP 1: Landscape Finish Grade Operator: All finish grade work regardless of equipment used, and all equipment with a rating more than 65 HP.

GROUP 2: Landscape Operator up to 65 HP: All equipment with

a manufacturer's rating of 65 HP or less except equipment covered by Group 1 or Group 3. The following equipment shall be included except when used for finish work as long as manufacturer's rating is 65 HP or less: A-Frame and Winch Truck, Backhoe, Forklift, Hydragraphic Seeder Machine, Roller, Rubber-Tired and Track Earthmoving Equipment, Skiploader, Straw Blowers, and Trencher 31 HP up to 65 HP.

GROUP 3: Landscae Utility Operator: Small Rubber-Tired Tractor, Trencher Under 31 HP.

AREA DESCRIPTIONS:

AREA 1: ALAMEDA, BUTTE, CONTRA COSTA, KINGS, MARIN, MERCED, NAPA, SACRAMENTO, SAN BENITO, SAN FRANCISCO, SAN JOAQUIN, SAN MATEO, SANTA CLARA, SANTA CRUZ, SOLANO, STANISLAUS, SUTTER, YOLO, AND YUBA COUNTIES

AREA 2 - MODOC COUNTY

THE REMAINING COUNTIES ARE SPLIT BETWEEN AREA 1 AND AREA 2 AS NOTED BELOW:

ALPINE COUNTY:

Area 1: Northernmost part

Area 2: Remainder

CALAVERAS COUNTY:

Area 1: Except Eastern part

Area 2: Eastern part

COLUSA COUNTY:

Area 1: Eastern part

Area 2: Remainder

DEL NORTE COUNTY:

Area 1: Extreme Southwestern corner

Area 2: Remainder

ELDORADO COUNTY:

Area 1: North Central part

Area 2: Remainder

FRESNO COUNTY

Area 1: Except Eastern part

Area 2: Eastern part

GLENN COUNTY:

Area 1: Eastern part

Area 2: Remainder

HUMBOLDT COUNTY:

Area 1: Except Eastern and Southwestern parts

Area 2: Remainder

LAKE COUNTY:

Area 1: Southern part

Area 2: Remainder

LASSEN COUNTY:

Area 1: Western part along the Southern portion of border with Shasta County

Area 2: Remainder

MADERA COUNTY

Area 1: Remainder

Area 2: Eastern part

MARIPOSA COUNTY

Area 1: Remainder

Area 2: Eastern part

MENDOCINO COUNTY:

Area 1: Central and Southeastern parts

Area 2: Remainder

MONTEREY COUNTY

Area 1: Remainder

Area 2: Southwestern part

NEVADA COUNTY:

Area 1: All but the Northern portion along the border of Sierra County

Area 2: Remainder

PLACER COUNTY:

Area 1: All but the Central portion

Area 2: Remainder

PLUMAS COUNTY:

Area 1: Western portion

Area 2: Remainder

SHASTA COUNTY:

Area 1: All but the Northeastern corner

Area 2: Remainder

SIERRA COUNTY:

Area 1: Western part

Area 2: Remainder

SISKIYOU COUNTY:

Area 1: Central part

Area 2: Remainder

SONOMA COUNTY:

Area 1: All but the Northwestern corner

Area 2: Reaminder

TEHAMA COUNTY:

Area 1: All but the Western border with mendocino & Trinity Counties

Area 2: Remainder

TRINITY COUNTY:

Area 1: East Central part and the Northeaster border with Shasta County

Area 2: Remainder

TULARE COUNTY;

Area 1: Remainder

Area 2: Eastern part

TUOLUMNE COUNTY:

Area 1: Remainder

Area 2: Eastern Part

IRON0002-004 07/01/2010

	Rates	Fringes
Ironworkers:		
Fence Erector	$ 26.58	15.26
Ornamental, Reinforcing and Structural	$ 33.00	23.73

PREMIUM PAY:

$6.00 additional per hour at the following locations:

China Lake Naval Test Station, Chocolate Mountains Naval Reserve-Niland, Edwards AFB, Fort Irwin Military Station, Fort Irwin Training Center-Goldstone, San Clemente Island, San Nicholas Island, Susanville Federal Prison, 29 Palms - Marine Corps, U.S. Marine Base - Barstow, U.S. Naval Air Facility - Sealey, Vandenberg AFB

$4.00 additional per hour at the following locations:

Army Defense Language Institute - Monterey, Fallon Air Base, Naval Post Graduate School - Monterey, Yermo Marine Corps Logistics Center

$2.00 additional per hour at the following locations:

Port Hueneme, Port Mugu, U.S. Coast Guard Station - Two Rock

LABO0036-001 07/01/2007

SAN FRANCISCO AND SAN MATEO COUNTIES:

	Rates	Fringes
MASON TENDER, BRICK.....	$ 26.93	16.50

FOOTNOTES: Underground work such as sewers, manholes, catch basins, sewer pipes, telephone conduits, tunnels and cut trenches: $5.00 per day additional. Work in live sewage: $2.50 per day additional.

LABO0036-002 07/01/2007

SAN FRANCISCO AND SAN MATEO COUNTIES:

	Rates	Fringes
PLASTER TENDER.....	$ 26.48	16.23

FOOTNOTES: Work on a suspended scaffold: $5.00 per day additional. Work operating a plaster mixer pump gun: $1.00 per hour additional.

LABO0067-002 04/01/2010

AREA "A" - ALAMEDA, CONTRA COSTA, MARIN, SAN FRANCISCO, SAN MATEO AND SANTA CLARA COUNTIES

AREA "B" - ALPINE, AMADOR, BUTTE, CALAVERAS, COLUSA, DEL NORTE, EL DORADO, FRESNO, GLENN, HUMBOLDT, KINGS, LAKE, LASSEN, MADERA, MARIPOSA, MENDOCINO, MERCED, MODOC, MONTEREY, NAPA, NEVADA, PLACER, PLUMAS, SACRAMENTO, SAN BENITO, SAN JOAQUIN, SANTA CRUZ, SHASTA, SIERRA, SISKIYOU, SOLANO, SONOMA, STANISLAUS, SUTTER, TEHAMA, TRINITY, TULARE, TUOLUMNE, YOLO AND YUBA COUNTIES

	Rates	Fringes

Asbestos Removal Laborer

Areas A & B.....$ 18.68 6.60

LABORER (Lead Removal)

Area A.....$ 36.25 6.68

Area B.....$ 35.25 6.68

ASBESTOS REMOVAL-SCOPE OF WORK: Site mobilization; initial site clean-up; site preparation; removal of asbestos-containing materials from walls and ceilings; or from pipes, boilers and mechanical systems only if they are being scrapped; encapsulation, enclosure and disposal of asbestos-containing materials by hand or with equipment or machinery; scaffolding; fabrication of temporary wooden barriers; and assembly of decontamination stations.

LABO0067-003 07/01/2009

AREA A: ALAMEDA, CONTRA COSTA, MARIN, SAN FRANCISCO, SAN MATEO & SANTA CLARA

AREA B: ALPINE, AMADOR, BUTTE, CALAVERAS, COLUSA, DEL NORTE, EL DORADO, FRESNO, GLENN, HUMBOLDT, KINGS, LAKE, LASSEN, MADERA, MARIPOSA, MENOCINO, MERCED, MODOC, MONTEREY, NAPA, NEVADA, PLACER, PLUMAS, SANCRMENTO, SAN BENITO, SAN JOAQUIN, SANTA CRUZ, SIERRA, SHASTA, SISKIYOU, SOLANO, SONOMA,

STANISLAUS,TEHAMA,TRINITY, TULARE, TUOLUMNE, YOLO & YUBA COUNTIES

	Rates	Fringes
LABORER (TRAFFIC CONTROL/LANE CLOSURE)		
Escort Driver, Flag Person		
Area A.....	$ 26.89	14.93
Area B.....	$ 25.89	14.93
Traffic Control Person I		
Area A.....	$ 27.19	14.93
Area B.....	$ 26.19	14.93
Traffic Control Person II		
Area A.....	$ 24.69	14.93
Area B.....	$ 23.69	14.93

TRAFFIC CONTROL PERSON I: Layout of traffic control, crash cushions, construction area and roadside signage.

TRAFFIC CONTROL PERSON II: Installation and removal of temporary/permanent signs, markers, delineators and crash cushions.

LABO0067-006 06/28/2010

AREA "A" - ALAMEDA, CONTRA COSTA, MARIN, SAN FRANCISCO, SAN MATEO AND SANTA CLARA COUNTIES

AREA "B" - ALPINE, AMADOR, BUTTE, CALAVERAS, COLUSA, EL DORADO, FRESNO, GLENN, KINGS, LASSEN, MADERA, MARIPOSA, MERCED, MODOC, MONTEREY, NAPA, NEVADA, PLACER, PLUMAS, SACRAMENTO, SAN BENITO, SAN JOAQUIN, SANTA CRUZ, SHASTA, SIERRA, SISKIYOU, SOLANO, SONOMA, STANISLAUS, SUTTER, TEHAMA, TRINITY, TULARE, TUOLUMNE, YOLO AND YUBA COUNTIES

	Rates	Fringes
Laborers: (CONSTRUCTION CRAFT LABORERS - AREA A:)		
Construction Specialist Group	$ 27.84	15.82
GROUP 1	$ 27.14	15.82
GROUP 1-a	$ 27.36	15.82
GROUP 1-c	$ 27.19	15.82
GROUP 1-e	$ 27.69	15.82
GROUP 1-f	$ 27.72	15.82
GROUP 1-g (Contra Costa		

County).....$ 27.34 15.82

GROUP 2.....$ 26.99 15.82

GROUP 3.....$ 26.89 15.82

GROUP 4.....$ 20.58 15.82

See groups 1-b and 1-d under laborer classifications.

Laborers: (CONSTRUCTION CRAFT

LABORERS - AREA B:)

Construction Specialist

Group.....$ 26.84 15.82

GROUP 1.....$ 26.14 15.82

GROUP 1-a.....$ 26.36 15.82

GROUP 1-c.....$ 26.19 15.82

GROUP 1-e.....$ 26.69 15.82

GROUP 1-f.....$ 26.72 15.82

GROUP 2.....$ 25.99 15.82

GROUP 3.....$ 25.89 15.82

GROUP 4.....$ 19.58 15.82

See groups 1-b and 1-d under laborer classifications.

Laborers: (GUNITE - AREA A:)

GROUP 1.....$ 28.10 15.82

GROUP 2.....$ 27.60 15.82

GROUP 3.....$ 27.60 15.82

GROUP 4.....$ 27.60 15.82

Laborers: (GUNITE - AREA B:)

GROUP 1.....$ 27.10 15.82

GROUP 2.....$ 26.60 15.82

GROUP 3.....$ 26.01 15.82

GROUP 4.....$ 25.89 15.82

Laborers: (WRECKING - AREA A:)

GROUP 1.....$ 27.14 15.82

GROUP 2.....$ 26.99 15.82

Laborers: (WRECKING - AREA B:)

GROUP 1.....$ 26.14 15.82

GROUP 2.....$ 25.99 15.82

Landscape Laborer (GARDENERS, HORTICULTURAL & LANDSCAPE LABORERS - AREA A:)

(1) New Construction.....$ 26.89 15.82

(2) Establishment Warranty Period.....$ 20.58 15.82

Landscape Laborer (GARDENERS, HORTICULURAL & LANDSCAPE LABORERS - AREA B:)

(1) New Construction.....$ 25.89 15.82

(2) Establishment Warranty Period.....$ 19.58 15.82

FOOTNOTES:

Laborers working off or with or from bos'n chairs, swinging scaffolds, belts shall receive $0.25 per hour above the

applicable wage rate. This shall not apply to workers entitled to receive the wage rate set forth in Group 1-a below.

LABORER CLASSIFICATIONS

CONSTRUCTION SPECIALIST GROUP: Asphalt ironer and raker; Chainsaw; Laser beam in connection with laborers' work; Cast-in- place manhole form setter; Pressure pipelayer; Davis trencher - 300 or similar type (and all small trenchers); Blaster; Diamond driller; Multiple unit drill; Hydraulic drill

GROUP 1: Asphalt spreader boxes (all types); Barko, Wacker and similar type tampers; Buggymobile; Caulker, bander, pipewrapper, conduit layer, plastic pipelayer; Certified hazardous waste worker including Leade Abatement; Compactors of all types; Concrete and magnesite mixer, 1/2 yd. and under; Concrete pan work; Concrete sander; Concrete saw; Cribber and/or shoring; Cut granite curb setter; Dri-pak-it machine; Faller, logloader and bucker; Form raiser, slip forms; Green cutter; Headerboard, Hubsetter,

aligner, by any method; High pressure blow pipe (1-1/2" or over, 100 lbs. pressure/over); Hydro seeder and similar type; Jackhammer operator; Jacking of pipe over 12 inches; Jackson and similar type compactor; Kettle tender, pot and worker applying asphalt, lay-kold, creosote, lime, caustic and similar type materials (applying means applying, dipping or handling of such materials); Lagging, sheeting, whaling, bracing, trenchjacking, lagging hammer; Magnesite, epoxyresin, fiberglass, mastic worker (wet or dry); No joint pipe and stripping of same, including repair of voids; Pavement breaker and spader, including tool grinder; Perma curb; Pipelayer (including grade checking in connection with pipelaying); Precast-manhole setter; Pressure pipe tester; Post hole digger, air, gas and electric; Power broom sweeper; Power tampers of all types (except as shown in Group 2); Ram set gun and stud gun; Riprap stonepaver and rock-slinger, including placing of sacked concrete and/or sand (wet or dry) and gabions and similar type; Rotary scarifier or multiple head concrete chipping scarifier; Roto and Ditch Witch; Rototiller; Sandblaster, pot, gun, nozzle operators; Signalling and rigging; Tank cleaner; Tree climber; Turbo blaster; Vibrascreed, bull float in connection with laborers' work; Vibrator; Hazardous waste worker (lead removal); Asbestos and mold removal worker

GROUP 1-a: Joy drill model TWM-2A; Gardner-Denver model DH143 and similar type drills; Track driller; Jack leg driller; Wagon driller; Mechanical drillers, all types regardless of type or method of power; Mechanical pipe layers, all types regardless of type or method of power; Blaster and powder; All work of loading, placing and blasting of all powder and explosives of whatever type regardless of method used for such loading and placing; High scalers (including drilling of same); Tree topper; Bit grinder

GROUP 1-b: Sewer cleaners shall receive $4.00 per day above Group 1 wage rates. "Sewer cleaner" means any worker who handles or comes in contact with raw sewage in small diameter sewers. Those who work inside recently active, large diameter sewers, and all recently active sewer manholes shal receive $5.00 per day above Group 1 wage rates.

GROUP 1-c: Burning and welding in connection with laborers' work; Synthetic thermoplastics and similar type welding

GROUP 1-d: Maintenance and repair track and road beds. All employees performing work covered herein shall receive $ .25 per hour above their regular rate for all work

performed on underground structures not specifically covered herein. This paragraph shall not be construed to apply to work below ground level in open cut. It shall apply to cut and cover work of subway construction after the temporary cover has been placed.

GROUP 1-e: Work on and/or in bell hole footings and shafts thereof, and work on and in deep footings. (A deep footing is a hole 15 feet or more in depth.) In the event the depth of the footing is unknown at the commencement of excavation, and the final depth exceeds 15 feet, the deep footing wage rate would apply to all employees for each and every day worked on or in the excavation of the footing from the date of inception.

GROUP 1-f: Wire winding machine in connection with guniting or shot crete

GROUP 1-g, CONTRA COSTA COUNTY: Pipelayer (including grade checking in connection with pipelaying); Caulker; Bander; Pipewrapper; Conduit layer; Plastic pipe layer; Pressure pipe tester; No joint pipe and stripping of same, including repair of voids; Precast manhole setters, cast in place manhole form setters

GROUP 2: Asphalt shoveler; Cement dumper and handling dry cement or gypsum; Choke-setter and rigger (clearing work); Concrete bucket dumper and chute; Concrete chipping and grinding; Concrete laborer (wet or dry); Driller tender, chuck tender, nipper; Guinea chaser (stake), grout crew; High pressure nozzle, adductor; Hydraulic monitor (over 100 lbs. pressure); Loading and unloading, carrying and hauling of all rods and materials for use in reinforcing concrete construction; Pittsburgh chipper and similar type brush shredders; Sloper; Single foot, hand-held, pneumatic tamper; All pneumatic, air, gas and electric tools not listed in Groups 1 through 1-f; Jacking of pipe - under 12 inches

GROUP 3: Construction laborers, including bridge and general laborer; Dump, load spotter; Flag person; Fire watcher; Fence erector; Guardrail erector; Gardener, horticultural and landscape laborer; Jetting; Limber, brush loader and piler; Pavement marker (button setter); Maintenance, repair track and road beds; Streetcar and railroad construction track laborer; Temporary air and water lines, Victaulic or similar; Tool room attendant (jobsite only)

GROUP 4: Final clean-up work of debris, grounds and building including but not limited to: street cleaner; cleaning and

washing windows; brick cleaner (jobsite only); material cleaner (jobsite only). The classification "material cleaner" is to be utilized under the following conditions:

A: at demolition site for the salvage of the material.

B: at the conclusion of a job where the material is to be salvaged and stocked to be reused on another job.

C: for the cleaning of salvage material at the jobsite or temporary jobsite yard.

The material cleaner classification should not be used in the performance of "form stripping, cleaning and oiling and moving to the next point of erection".

GUNITE LABORER CLASSIFICATIONS

GROUP 1: Structural Nozzleman

GROUP 2: Nozzleman, Gunman, Potman, Groundman

GROUP 3: Reboundman

GROUP 4: Gunite laborer

WRECKING WORK LABORER CLASSIFICATIONS

GROUP 1: Skilled wrecker (removing and salvaging of sash, windows and materials)

GROUP 2: Semi-skilled wrecker (salvaging of other building materials)

LABO0067-010 07/01/2010

	Rates	Fringes
Tunnel and Shaft Laborers:		
GROUP 1	$ 33.35	16.08
GROUP 2	$ 33.12	16.08
GROUP 3	$ 32.87	16.08
GROUP 4	$ 32.42	16.08
GROUP 5	$ 31.88	16.08
Shotcrete Specialist	$ 33.87	16.08

TUNNEL AND SHAFT CLASSIFICATIONS

GROUP 1: Diamond driller; Groundmen; Gunite and shotcrete

nozzlemen

GROUP 2: Rodmen; Shaft work & raise (below actual or excavated ground level)

GROUP 3: Bit grinder; Blaster, driller, powdermen, heading; Cherry pickermen - where car is lifted; Concrete finisher in tunnel; Concrete screedman; Grout pumpman and potman; Gunite & shotcrete gunman & potman; Headermen; High pressure nozzleman; Miner - tunnel, including top and bottom man on shaft and raise work; Nipper; Nozzleman on slick line; Sandblaster - potman, Robotic Shotcrete Placer, Segment Erector, Tunnel Muck Hauler, Steel Form raiser and setter; Timberman, retimberman (wood or steel or substitute materials therefore); Tugger (for tunnel laborer work); Cable tender; Chuck tender; Powderman - primer house

GROUP 4: Vibrator operator, pavement breaker; Bull gang - muckers, trackmen; Concrete crew - includes rodding and spreading, Dumpmen (any method)

GROUP 5: Grout crew; Reboundman; Swamper/ Brakeman

CALAVERAS, MARIPOSA, MERCED, MONTEREY, SAN BENITO, SAN JOAQUIN, STANISLAUS AND TUOLUMNE COUNTIES:

	Rates	Fringes
LABORER		
Mason Tender-Brick	$ 27.03	14.93

LABO0073-005 07/01/2009

CALAVERAS, FRESNO, KINGS, MADERA, MARIPOSA, MERCED, SAN JOAQUIN, STANISLAUS & TUOLUMNE

	Rates	Fringes
Plasterer tender	$ 28.37	14.14

LABO0166-001 07/01/2006

ALAMEDA AND CONTRA COSTA COUNTIES:

	Rates	Fringes

Brick Tender.....$ 25.91 14.65

FOOTNOTES: Work on jobs where heat-protective clothing is required: $2.00 per hour additional. Work at grinders: $.25 per hour additional. Manhole work: $2.00 per day additional.

LABO0166-002 07/01/2006

ALAMEDA AND CONTRA COSTA COUNTIES:

Rates Fringes

Plasterer tender.....$ 30.15 15.90

Gun Man $0.75 per hour additional

LABO0270-001 07/01/2008

SANTA CLARA & SANTA CRUZ COUNTIES

Rates Fringes

MASON TENDER, BRICK

Santa Clara.....$ 27.93 13.48

Santa Cruz.....$ 26.93 13.48

FOOTNOTE: $2.00 per hour for refactory work where heat-protective clothing is required.

LABO0270-005 07/01/2007

SANTA CLARA AND SANTA CRUZ COUNTIES

	Rates	Fringes
PLASTER TENDER		
4 Stories and under.....	$ 27.62	13.73
5 Stories and above.....	$ 29.54	13.73

LABO0294-001 07/01/2009

FRESNO, KINGS AND MADERA COUNTIES

	Rates	Fringes
LABORER (Brick)		
Mason Tender-Brick.....	$ 27.03	14.93

LABO0297-001 08/01/2007

MONTEREY AND SAN BENITO COUNTIES

	Rates	Fringes
Plasterer tender.....	$ 23.70	11.50

FOOTNOTE: Mixer person: $4.00 per day additional.

PAIN0016-001 01/01/2011

ALAMEDA, CONTRA COSTA, MONTEREY, SAN BENITO, SAN MATEO, SANTA CLARA, AND SANTA CRUZ COUNTIES

	Rates	Fringes
Painters:.....	$ 32.71	19.16

PREMIUMS:

EXOTIC MATERIALS - $0.75 additional per hour.

SPRAY WORK: - $0.50 additional per hour.

INDUSTRIAL PAINTING - $0.25 additional per hour

[Work on industrial buildings used for the manufacture and processing of goods for sale or service; steel construction

(bridges), stacks, towers, tanks, and similar structures]

HIGH WORK:

over 50 feet - $2.00 per hour additional

100 to 180 feet - $4.00 per hour additional

Over 180 feet - $6.00 per houir additional

PAIN0016-003 07/01/2010

AREA 1: ALAMEDA, CONTRA COSTA, SAN FRANCISCO, SAN MATEO & SANTA CLARA COUNTIES

AREA 2: CALAVERAS, MARIPOA, MERCED, MONTEREY, SAN BENITO, SAN JOAQUIN, SANTA CRUZ, STANISLAUS & TUOLUMNE COUNTIES

	Rates	Fringes
Drywall Finisher/Taper		
AREA 1	$ 42.66	17.26
AREA 2	$ 36.53	14.78

---

* PAIN0016-012 01/01/2011

ALAMEDA, CONTRA COSTA, MARIPOSA, MERCED, MONTEREY, SAN BENITO,

SAN FRANCISCO, SAN MATEO, SANTA CLARA AND SANTA CRUZ COUNTIES

	Rates	Fringes
SOFT FLOOR LAYER.....	$ 40.17	17.41

PAIN0016-015 01/01/2011

CALAVERAS, MARIPOSA, MERCED, SAN JOAQUIN, STANISLAUS & TUOLUMNE COUNTIES

	Rates	Fringes
PAINTER.....	$ 27.78	15.27
Brush.....	$ 29.82	12.72

FOOTNOTES:

SPRAY/SANDBLAST: $0.50 additional per hour.

EXOTIC MATERIALS: $1.00 additional per hour.

HIGH TIME: Over 50 ft above ground or water level $2.00 additional per hour. 100 to 180 ft above ground or water level $4.00 additional per hour. Over 180 ft above ground or water level $6.00 additional per hour.

PAIN0016-022 01/01/2011

SAN FRANCISCO COUNTY

	Rates	Fringes
PAINTER	$ 36.33	19.16

PAIN0169-001 01/01/2011

FRESNO, KINGS, MADERA, MARIPOSA AND MERCED COUNTIES:

	Rates	Fringes
GLAZIER	$ 30.89	16.92

PAIN0169-005 01/01/2011

ALAMEDA CONTRA COSTA, MONTEREY, SAN BENITO, SAN FRANCISCO, SAN MATEO, SANTA CLARA & SANTA CRUZ COUNTIES

	Rates	Fringes

GLAZIER.....$ 41.88 20.29

---

* PAIN0294-004 02/01/2011

FRESNO, KINGS AND MADERA COUNTIES

	Rates	Fringes
PAINTER		
Brush, Roller	$ 25.67	14.57
Drywall Finisher/Taper	$ 30.47	15.57

FOOTNOTE:

Spray Painters & Paperhangers recive $1.00 additional per hour. Painters doing Drywall Patching receive $1.25 additional per hour. Lead Abaters & Sandblasters receive $1.50 additional per hour. High Time - over 30 feet (does not include work from a lift) $0.75 per hour additional.

PAIN0294-005 01/01/2011

FRESNO, KINGS & MADERA

Rates Fringes

SOFT FLOOR LAYER.....$ 27.83 14.33

PAIN0767-001 01/01/2011

CALAVERAS, SAN JOAQUIN, STANISLAUS AND TUOLUMNE COUNTIES:

Rates Fringes

GLAZIER.....$ 32.34 18.49

PAID HOLIDAYS: New Year's Day, Martin Luther King, Jr. Day, President's Day, Memorial Day, Independence Day, Labor Day, Veteran's Day, Thanksgiving Day, and Christmas Day.

Employee rquired to wear a body harness shall receive $1.50 per hour above the basic hourly rate at any elevation.

PAIN1176-001 07/01/2009

HIGHWAY IMPR0VEMENT

Rates Fringes

Parking Lot Striping/Highway Marking:

GROUP 1.....$ 29.44 12.51

GROUP 2.....$ 24.23 12.51

GROUP 3.....$ 24.86 12.51

CLASSIFICATIONS

GROUP 1: Striper: Layout and application of painted traffic stripes and marking; hot thermo plastic; tape, traffic stripes and markings

GROUP 2: Gamecourt & Playground Installer

GROUP 3: Protective Coating, Pavement Sealing

PAIN1237-003 01/01/2011

CALAVERAS; SAN JOAQUIN COUNTIES; STANISLAUS AND TUOLUMNE COUNTIES:

	Rates	Fringes
SOFT FLOOR LAYER.....	$ 28.25	15.68

PLAS0066-002 07/01/2009

ALAMEDA, CONTRA COSTA, SAN MATEO AND SAN FRANCISCO COUNTIES:

	Rates	Fringes
PLASTERER	$ 34.13	21.15

PLAS0300-001 07/01/2009

	Rates	Fringes
PLASTERER		
AREA 188: Fresno	$ 29.72	14.21
AREA 224: San Benito, Santa Clara, Santa Cruz	$ 34.22	14.08
AREA 295: Calaveras & San Joaquin Couonties	$ 32.82	15.10
AREA 337: Monterey County	$ 31.01	13.93
AREA 429: Mariposa, Merced, Stanislaus, Tuolumne Counties	$ 32.82	15.30

PLAS0300-005 06/28/2010

	Rates	Fringes

CEMENT MASON/CONCRETE FINISHER...$ 28.65 18.56

PLUM0038-001 07/01/2010

SAN FRANCISCO COUNTY

	Rates	Fringes
PLUMBER (Plumber, Steamfitter, Refrigeration Fitter)	$ 55.25	37.04

PLUM0038-005 07/01/2010

SAN FRANCISCO COUNTY

	Rates	Fringes
Landscape/Irrigation Fitter (Underground/Utility Fitter)	$ 46.96	26.35

PLUM0062-001 01/01/2011

MONTEREY AND SANTA CRUZ COUNTIES

	Rates	Fringes
PLUMBER & STEAMFITTER	$ 40.20	21.68

PLUM0159-001 01/01/2011

CONTRA COSTA COUNTY

	Rates	Fringes
Plumber and steamfitter		
(1) Refrigeration	$ 48.58	26.39
(2) All other work	$ 49.47	26.39

PLUM0246-001 01/01/2011

FRESNO, KINGS & MADERA COUNTIES

	Rates	Fringes
PLUMBER & STEAMFITTER	$ 35.45	21.68

PLUM0246-004 07/01/2006

FRESNO, MERCED & SAN JOAQUIN COUNIES

	Rates	Fringes
PLUMBER (PIPE TRADESMAN).....	$ 13.00	7.30

PIPE TRADESMAN SCOPE OF WORK:

Installation of corrugated metal piping for drainage, as well as installation of corrugated metal piping for culverts in connection with storm sewers and drains; Grouting, dry packing and diapering of joints, holes or chases including paving over joints, in piping; Temporary piping for dirt work for building site preparation; Operating jack hammers, pavement breakers, chipping guns, concrete saws and spades to cut holes, chases and channels for piping systems; Digging, grading, backfilling and ground preparation for all types of pipe to all points of the jobsite; Ground preparation including ground leveling, layout and planting of shrubbery, trees and ground cover, including watering, mowing, edging, pruning and fertilizing, the breaking of concrete, digging, backfilling and tamping for the preparation and completion of all work in connection with lawn sprinkler and landscaping; Loading, unloading and distributing materials at jobsite; Putting away materials in storage bins in jobsite secure storage area; Demolition

of piping and fixtures for remodeling and additions; Setting up and tearing down work benches, ladders and job shacks; Clean-up and sweeping of jobsite; Pipe wrapping and waterproofing where tar or similar material is applied for protection of buried piping; Flagman

---

PLUM0342-001 07/01/2010

ALAMEDA & CONTRA COSTA COUNTIES

	Rates	Fringes
PIPEFITTER		
CONTRA COSTA COUNTY.....	$ 49.21	29.14
PLUMBER, PIPEFITTER, STEAMFITTER		
ALAMEDA COUNTY.....	$ 49.21	29.14

PLUM0355-004 07/01/2010

ALAMEDA, CALAVERAS, CONTRA COSTA, FRESNO, KINGS, MADERA, MARIPOSA, MERCED, MONTEREY, SAN BENITO, SAN JOAQUIN, SAN MATEO, SANTA CLARA, SANTA CRUZ, STANISLAUS, AND TUOLUMNE COUNTIES:

Rates Fringes

Underground Utility Worker

/Landscape Fitter.....$ 28.10 7.20

PLUM0393-001 07/01/2010

SAN BENITO AND SANTA CLARA COUNTIES

Rates Fringes

PLUMBER/PIPEFITTER.....$ 51.86 26.13

PLUM0442-001 01/01/2011

CALAVERAS, MARIPOSA, MERCED, SAN JOAQUIN, STANISLAUS & TUOLUMNE COUNTIES

Rates Fringes

PLUMBER & STEAMFITTER.....$ 35.70 21.68

PLUM0467-001 01/01/2011

	Rates	Fringes
Underground Utility Worker /Landscape Fitter	$ 28.10	7.20

PLUM0393-001 07/01/2010

SAN BENITO AND SANTA CLARA COUNTIES

	Rates	Fringes
PLUMBER/PIPEFITTER	$ 51.86	26.13

PLUM0442-001 01/01/2011

CALAVERAS, MARIPOSA, MERCED, SAN JOAQUIN, STANISLAUS & TUOLUMNE COUNTIES

	Rates	Fringes
PLUMBER & STEAMFITTER	$ 35.70	21.68

PLUM0467-001 01/01/2011

SAN MATEO COUNTY

	Rates	Fringes
Plumber/Pipefitter/Steamfitter...	$ 52.95	24.76

ROOF0027-002 09/01/2010

FRESNO, KINGS, AND MADERA COUNTIES

	Rates	Fringes
ROOFER.....	$ 27.65	8.07

FOOTNOTE: Work with pitch, pitch base of pitch impregnated products or any material containing coal tar pitch, on any building old or new, where both asphalt and pitchers are used in the application of a built-up roof or tear off: $2.00 per hour additional.

ROOF0040-002 08/01/2010

SAN FRANCISCO & SAN MATEO COUNTIES:

	Rates	Fringes

ROOFER.....$ 33.33 11.04

ROOF0081-001 08/01/2009

ALAMEDA AND CONTRA COSTA COUNTIES:

	Rates	Fringes
Roofer.....	$ 30.95	12.65

ROOF0081-004 08/01/2009

CALAVERAS, MARIPOSA, MERCED, SAN JOAQUIN, STANISLAUS AND TUOLUMNE COUNTIES:

	Rates	Fringes
ROOFER.....	$ 24.56	12.60

ROOF0095-002 08/01/2009

MONTEREY, SAN BENITO, SANTA CLARA, AND SANTA CRUZ COUNTIES:

Rates Fringes

ROOFER

Journeyman.....$ 30.32 9.29

Kettle person (2 kettles);

Bitumastic, Enameler, Coal

Tar, Pitch and Mastic

worker.....$ 33.32 9.29

Kettleman (2 kettles),

Bitumastic Enameler, Coal

Tar, Pitch & Mastic.....$ 33.73 9.89

SFCA0483-001 01/01/2011

ALAMEDA, CONTRA COSTA, SAN FRANCISCO, SAN MATEO AND SANTA CLARA COUNTIES:

Rates Fringes

SPRINKLER FITTER (FIRE).....$ 49.50 23.55

SFCA0669-011 04/01/2010

CALAVERAS, FRESNO, KINGS, MADERA, MARIPOSA, MERCED, MONTEREY,

SAN BENITO, SAN JOAQUIN, SANTA CRUZ, STANISLAUS AND TUOLUMNE COUNTIES:

	Rates	Fringes
SPRINKLER FITTER	$ 33.35	17.60

SHEE0104-001 07/01/2009

AREA 1: ALAMEDA, CONTRA COSTA, SAN FRANCISCO, SAN MATEO, SANTA CLARA

AREA 2: MONTEREY & SAN BENITO

AREA 3: SANTA CRUZ

	Rates	Fringes
SHEET METAL WORKER		
AREA 1:		
Mechanical Contracts		
under $200,000	$ 43.32	26.40
All Other Work	$ 47.73	26.67

AREA 2.....$ 37.32 3%+22.45

AREA 3.....$ 39.25 22.26

SHEE0104-015 07/01/2009

ALAMEDA, CONTRA COSTA, MONTEREY, SAN BENITO, SAN FRANCISCO, SAN MATEO, SANTA CLARA AND SANTA CRUZ COUNTIES:

Rates Fringes

SHEETMETAL WORKER (Metal

Decking and Siding only).....$ 33.43 24.31

SHEE0162-001 01/01/2011

CALAVERAS AND SAN JOAQUIN COUNTIES:

Rates Fringes

SHEET METAL WORKER.....$ 32.17 21.26

SHEE0162-003 07/01/2010

MARIPOSA, MERCED, STANISLAUS AND TUOLUMNE COUNTIES:

Rates Fringes

SHEET METAL WORKER (Excluding

metal deck and siding).....$ 31.34 25.41

SHEE0162-004 01/01/2011

FRESNO, KINGS, AND MADERA COUNTIES:

Rates Fringes

SHEET METAL WORKER.....$ 32.72 24.31

SHEE0162-013 01/01/2011

CALAVERAS, FRESNO, KINGS, MADERA, MARIPOSA, MERCED, SAN JOAQUIN, STANISLAUS AND TUOLUMNE COUNTIES:

Rates Fringes

Sheet metal worker (Metal

decking and siding only).....$ 32.72 24.31

TEAM0094-001 07/01/2009

	Rates	Fringes
Truck drivers:		
GROUP 1	$ 27.13	18.99
GROUP 2	$ 27.43	18.99
GROUP 3	$ 27.73	18.99
GROUP 4	$ 28.08	18.99
GROUP 5	$ 28.43	18.99

FOOTNOTES:

Articulated dump truck; Bulk cement spreader (with or without auger); Dumpcrete truck; Skid truck (debris box); Dry pre-batch concrete mix trucks; Dumpster or similar type; Slurry truck: Use dump truck yardage rate.

Heater planer; Asphalt burner; Scarifier burner; Industrial lift truck (mechanical tailgate); Utility and clean-up truck: Use appropriate rate for the power unit or the equipment utilized.

TRUCK DRIVER CLASSIFICATIONS

GROUP 1: Dump trucks, under 6 yds.; Single unit flat rack (2-

axle unit); Nipper truck (when flat rack truck is used appropriate flat rack shall apply); Concrete pump truck (when flat rack truck is used appropriate flat rack shall apply); Concrete pump machine; Fork lift and lift jitneys; Fuel and/or grease truck driver or fuel person; Snow buggy; Steam cleaning; Bus or personhaul driver; Escort or pilot car driver; Pickup truck; Teamster oiler/greaser and/or serviceperson; Hook tender (including loading and unloading); Team driver; Tool room attendant (refineries)

GROUP 2: Dump trucks, 6 yds. and under 8 yds.; Transit mixers, through 10 yds.; Water trucks, under 7,000 gals.; Jetting trucks, under 7,000 gals.; Single-unit flat rack (3-axle unit); Highbed heavy duty transport; Scissor truck; Rubber-tired muck car (not self-loaded); Rubber-tired truck jumbo; Winch truck and "A" frame drivers; Combination winch truck with hoist; Road oil truck or bootperson; Buggymobile; Ross, Hyster and similar straddle carriers; Small rubber-tired tractor

GROUP 3: Dump trucks, 8 yds. and including 24 yds.; Transit mixers, over 10 yds.; Water trucks, 7,000 gals. and over; Jetting trucks, 7,000 gals. and over; Vacuum trucks under 7500 gals. Trucks towing tilt bed or flat bed pull trailers; Lowbed heavy duty transport; Heavy duty transport

tiller person; Self- propelled street sweeper with self-contained refuse bin; Boom truck - hydro-lift or Swedish type extension or retracting crane; P.B. or similar type self-loading truck; Tire repairperson; Combination bootperson and road oiler; Dry distribution truck (A bootperson when employed on such equipment, shall receive the rate specified for the classification of road oil trucks or bootperson); Ammonia nitrate distributor, driver and mixer; Snow Go and/or plow

GROUP 4: Dump trucks, over 25 yds. and under 65 yds.; Water pulls - DW 10's, 20's, 21's and other similar equipment when pulling Aqua/pak or water tank trailers; Helicopter pilots (when transporting men and materials); Lowbedk Heavy Duty Transport up to including 7 axles; DW10's, 20's, 21's and other similar Cat type, Terra Cobra, LeTourneau Pulls, Tournorocker, Euclid and similar type equipment when pulling fuel and/or grease tank trailers or other miscellaneous trailers; Vacuum Trucks 7500 gals and over and truck repairman

GROUP 5: Dump trucks, 65 yds. and over; Holland hauler; Low bed Heavy Duty Transport over 7 axles

---

WELDERS - Receive rate prescribed for craft performing operation to which welding is incidental.

==========

Unlisted classifications needed for work not included within the scope of the classifications listed may be added after award only as provided in the labor standards contract clauses (29CFR 5.5 (a) (1) (ii)).

In the listing above, the "SU" designation means that rates listed under the identifier do not reflect collectively bargained wage and fringe benefit rates. Other designations indicate unions whose rates have been determined to be prevailing.

WAGE DETERMINATION APPEALS PROCESS

1.) Has there been an initial decision in the matter? This can be:

* an existing published wage determination

* a survey underlying a wage determination
* a Wage and Hour Division letter setting forth a position on a wage determination matter
* a conformance (additional classification and rate) ruling

On survey related matters, initial contact, including requests for summaries of surveys, should be with the Wage and Hour Regional Office for the area in which the survey was conducted because those Regional Offices have responsibility for the Davis-Bacon survey program. If the response from this initial contact is not satisfactory, then the process described in 2.) and 3.) should be followed.

With regard to any other matter not yet ripe for the formal process described here, initial contact should be with the Branch of Construction Wage Determinations. Write to:

Branch of Construction Wage Determinations
Wage and Hour Division
U.S. Department of Labor
200 Constitution Avenue, N.W.
Washington, DC 20210

2.) If the answer to the question in 1.) is yes, then an interested party (those affected by the action) can request

review and reconsideration from the Wage and Hour Administrator (See 29 CFR Part 1.8 and 29 CFR Part 7). Write to:

Wage and Hour Administrator
U.S. Department of Labor
200 Constitution Avenue, N.W.
Washington, DC 20210

The request should be accompanied by a full statement of the interested party's position and by any information (wage payment data, project description, area practice material, etc.) that the requestor considers relevant to the issue.

3.) If the decision of the Administrator is not favorable, an interested party may appeal directly to the Administrative Review Board (formerly the Wage Appeals Board). Write to:

Administrative Review Board
U.S. Department of Labor
200 Constitution Avenue, N.W.
Washington, DC 20210

4.) All decisions by the Administrative Review Board are final.

==========

END OF GENERAL DECISION