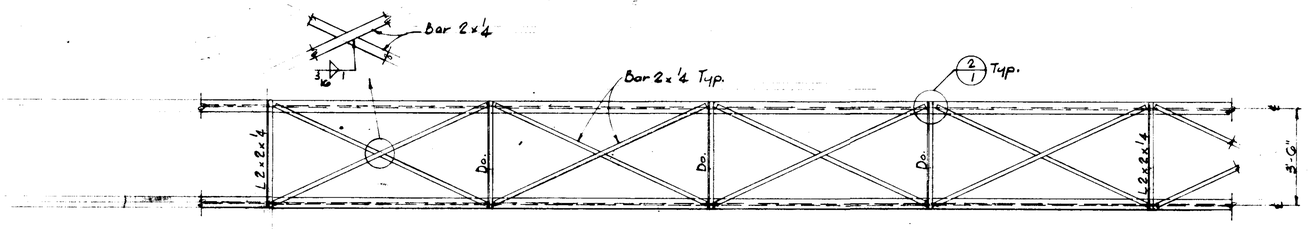

TOP CHORD BRACING 3/8"=1'-0"

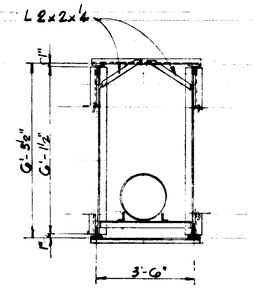

TYPICAL CROSS SECTION 3/8"=1'-0"

GENERAL NOTES

All work shall conform to all local building codes.

Structural steel shall conform to ASTM A36 specifications. Fabrication and erection shall be in accordance with the latest recommendations of the AISC and AWS. Welding rods shall be AWS E70xx or SAW 2. Welders shall have current AWS certificates for the type of material and welds. All work shall conform to AISC and AWS standards.

Sandblasting and paint on truss and miscellaneous iron see specification SP-310-2.5 and SP-310-5.1

Safety measures: At all times the Contractor shall be solely and completely responsible for conditions of the jobsite including safety of the persons and property and for all necessary independent engineering reviews of these conditions. The Engineer's jobsite review is not intended to include review of the adequacy of the Contractor's safety measures.

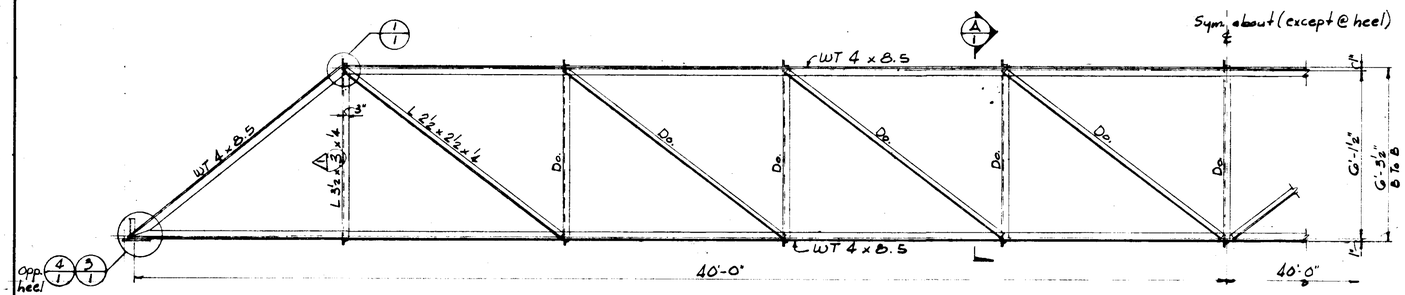

TYPICAL ELEVATION 3/8"=1'-0"

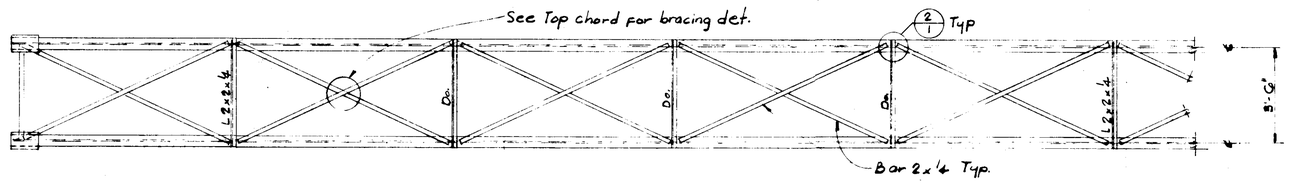

BOTTOM CHORD BRACING 3/8"=1'-0"

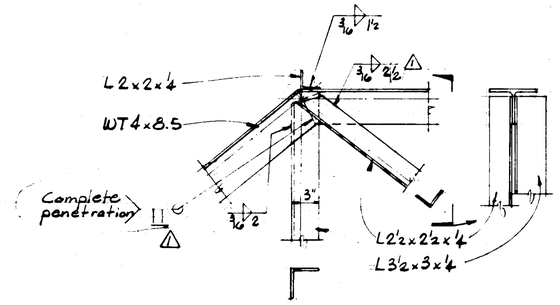

DETAIL 1/1
1½"=1'-0"

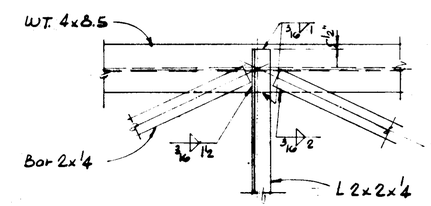

DETAIL 2/1
1½"=1'-0"

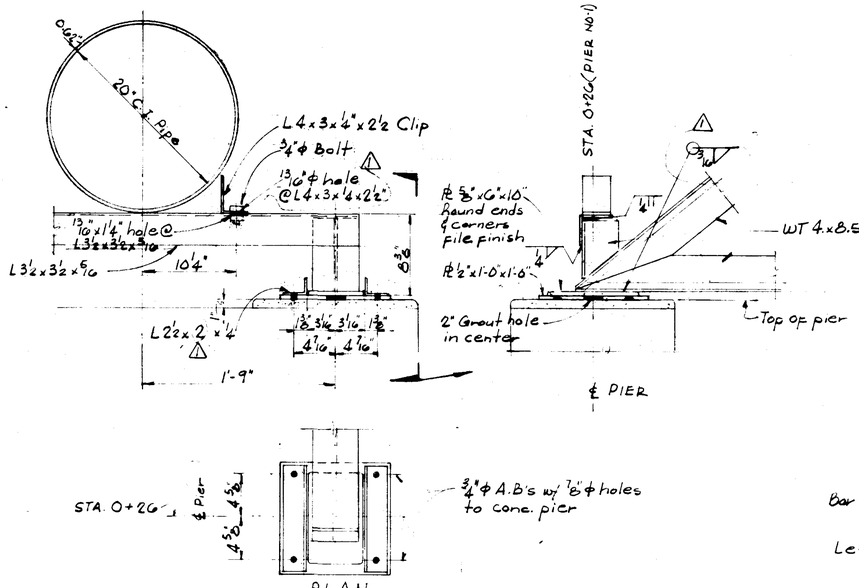

DETAIL 3/1
1½"=1'-0"

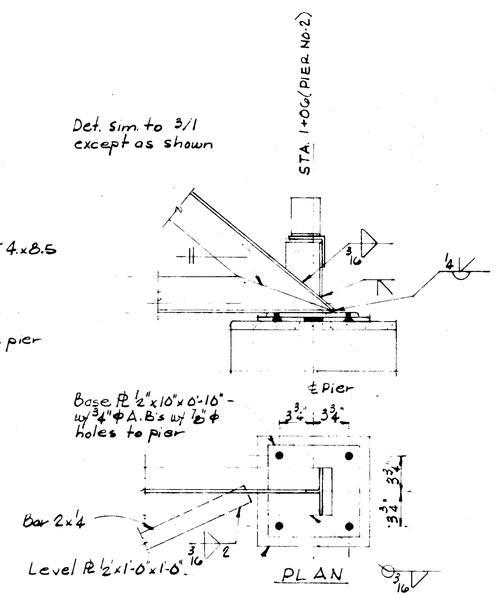

DETAIL 4/1
1½"=1'-0"

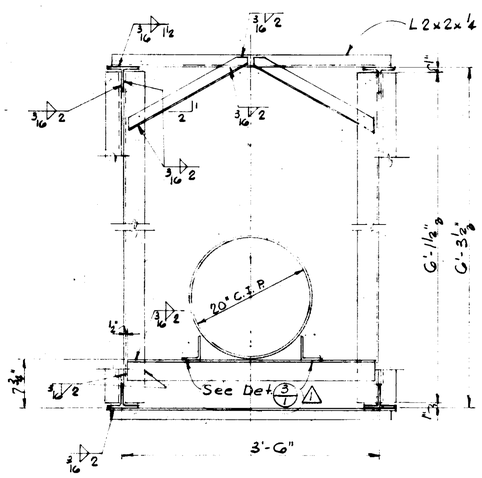

SECTION A/1
1"=1'-0"

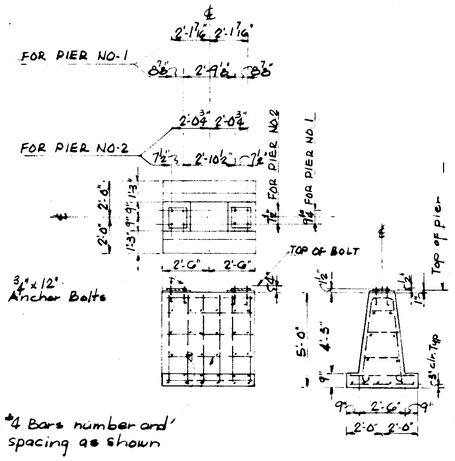

PIER DETAIL 5/1
1/4"=1'-0"

NO.	REVISION	DATE	BY
1	Change required by City of S.L.	3/4/74	E.G.

DATE Feb. 5, 1974
DRAWN BY E.G.
CHECKED BY MJ

Jordan, Casper and Woodman
Structural and Civil Engineers
384 Embarcadero West
Oakland, California 94607
415 | 832-5466

TRUSS SUPPORT DETAILS
For PREDA FRANKLIN SEWER San Leandro, Calif.
DONICO, INC. CONTRACTOR

TRUSS ELEVATION, BRACING PLANS, DETAILS, SECTIONS & GEN. NOTES

PROJECT 74019
REVISION 1
SHT. 1 OF 1

DWG 190 CASE 505